01330000

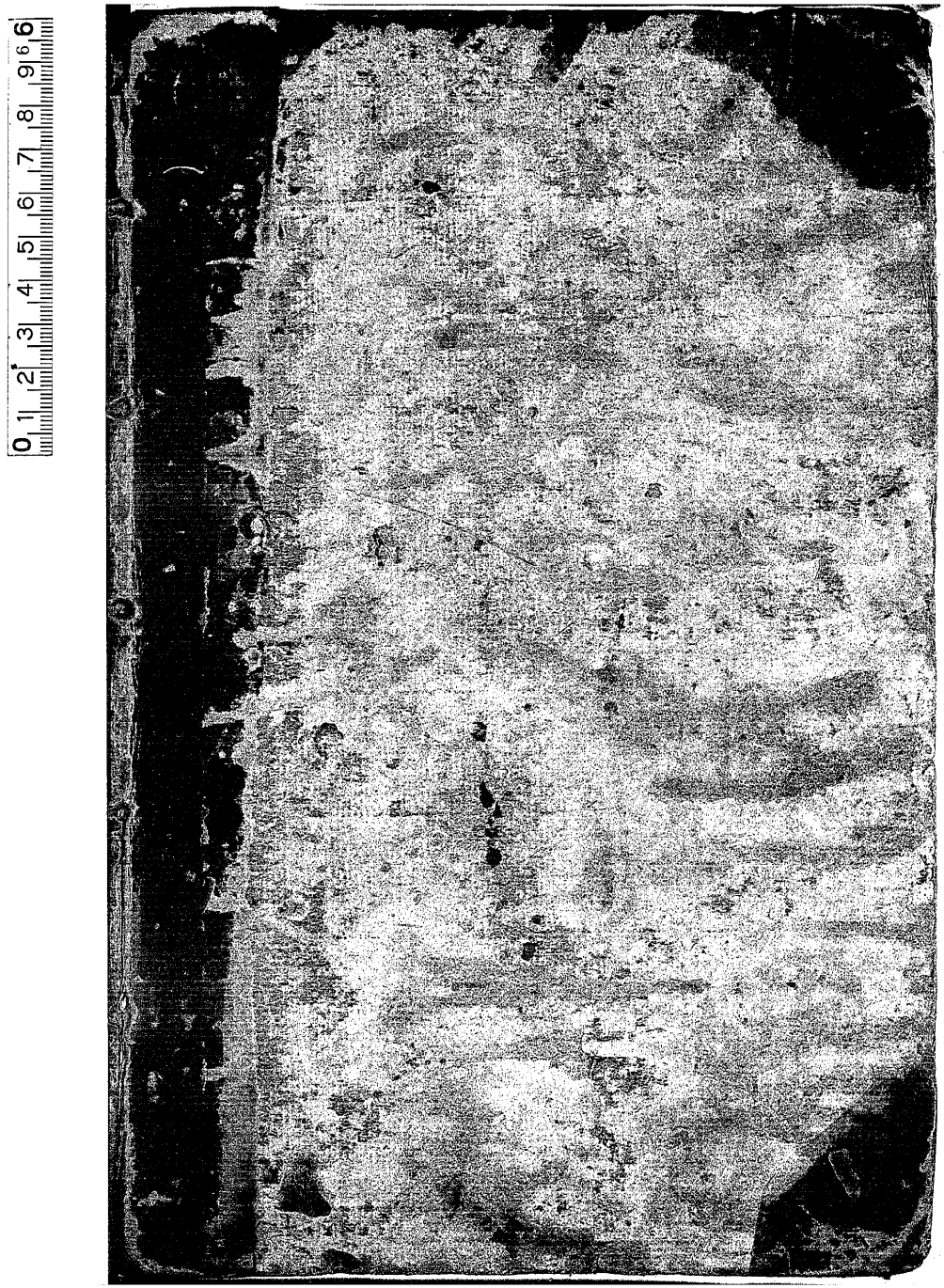

[J. Tull]

C. Lewis
Joanna Williams
Olim C. - Merton College Oxon
1812

THE

Horse-Hoing Husbandry:

OR, AN

ESSAY

On the PRINCIPLES of

TILLAGE and VEGETATION.

Wherein is shewn

A METHOD of introducing a Sort of *Vineyard-Culture* into the Corn-Fields,

In order to

Increase their Product, and diminish the common Expence;

By the Use of

INSTRUMENTS described in CUTS.

By *I. T.*

Cum Privilegio Regiæ Majestatis.

LONDON:

Printed for the AUTHOR, and Sold by *G. Strahan* in *Cornhill*; *T. Woodward* in *Fleet-Street*; *A. Miller* over-against St. *Clement's-Church* in the *Strand*; *J. Stagg* in *Westminster-Hall*; and *J. Brindley* in *New-Bond-Street*.

MDCCXXXIII.

THE

PREFACE.

I THINK it unneceſſary (if not impertinent) to trouble the Reader with a long Account of a ſhort Treatiſe, which he has before him: I might, as a Ruſtick, omit the Ceremony of a Preface, were it not reaſonable to expect, that an Apology will be required for writing and publiſhing a Book without the uſual Qualifications of an Author. It was not, indeed, my own Inclinations that prompted me to write; for (tho' almoſt all my Life has been a continued Sickneſs) I was ſo far from being inclined to the Scribbling Diſeaſe, that I had diſuſed Writing for above twenty Years, before I was prevail'd on to commit my Thoughts upon Husbandry, and the Deſcriptions of my Engines to Paper. The Solicitations by Letters which I can produce (enough to make an ordinary Volume) from Perſons of Rank, who had ſeen my Manner of planting St. Foin, &c. I could not abſolutely refuſe, notwithſtanding the many juſt Excuſes I made for declining a Task of which I knew myſelf incapable: A long Confinement within the Limits of a lonely Farm in a Country where I am a Stranger, having debar'd me from all Converſation, except of low Life, I foreſaw that Words would be wanting to expreſs my Thoughts properly, which is a Misfortune that cannot be concealed: However at firſt I did not think I ſhould have Occaſion of many, intending to write no more Theory, than my Notion of the Paſture of Plants, and to ſhew how their Roots are naturally adapted to receive the Benefit of the Hoing Husbandry, believing that the Whole of That might have been compriz'd in a Sheet or two, and the reſt in about as many more; but Books of Agriculture by chance coming to my Hands (I never having read any of them before) occaſioned more Writing than I propoſed.

'Tis no Wonder that the Stile is low as the Author, or the Duſt that is here treated of, ſince the Whole was written in Pains of the Stone, and other Diſeaſes as incurable, and almoſt as cruel: But fine Language will not fill a Farmer's Barn; neither does Truth need any Embelliſhments of Art.

Connexion cannot be expected in a Book compoſed of Notes written at different Times, ſome in one Year, ſome in others, as ſomething new flow'd from a different Practice from what was common. Beſides, as I was by Sickneſs incapable of aſſiſting when it was tranſcribed for the Preſs, when many Notes were to be inſerted, my Scribe not underſtanding their Marks miſplaced many of them, ſome in the Text, ſome in the Margin, ſome in the wrong Chapters, many he left out, and more being miſlaid which he did not find; among which laſt were the ſeveral Weighings of my drill'd Crops and the neighbouring Crops: As for theſe and much of the ſpeculative Part left out, if it had been more, it had been no great Matter; but as ſome of the Chap. of Wheat is omitted,

omitted, I shall rather insert what of it is necessary into the Preface, than that the Beginner shall want it.

Several Things caus'd the Want of Method. My Scribe was so little skill'd in Country Affairs as sometimes to set the Cart before the Horse, *as he does, where he places the Hoing of Turneps before the Planting of them: But I presume this Mistake will not be followed by any Practiser, and then Nobody will be injur'd by it, or by any other such like* Hysteron-Proteron *to be found in the* Chap. *of Wheat, or elsewhere in the Book: Another Injury to the Method was the five Chapters of the* Specimen *being taken out of their Places, and it not being timely resolv'd whether they should be reprinted or not, they were added after the other fifteen Chapters without separating them.*

Some Things may be properly repeated, *where used in different Places for different* Purposes; *but I doubt this will not excuse every Repetition the Reader will find.*

I had no Opportunity of correcting the Sheets from the Press, nor any Friend to do it for me, which might have been some Excuse for the Faults of the Printer, had he not usurp'd a Prerogative of Coining of Words: All he can pretend to say for his, and what I am sure I can truly say for my own Faults (which perhaps may be more) is that none of them are wilful.

As to the Manner of filling the Pages with Notes, whether it be a Fault or not may be doubtful; those who read *merely for Curiosity may blame it for being out of the* Mode; *but the Reader who intends to practise may like it the better; because by this means Things are brought into the shortest Compass, and he has in his View in one Page as much Matter, as might be extended to several Sheets by the Introductory Words which would be necessary to carry it on in a* continued Discourse: *If any one shall be so censorious as to say, I use this contracting Method, rather to save my own Time in Writing, than his in Reading, perhaps his Suspicion may not be very unjust; for he who practises Agriculture with Effect, can have little Time to spare for either. Besides, since I cannot pretend to say of this Treatise (as a late Author says of his of much greater Bulk on the same Subject) that it is* Multum in Parvo; *I may hope in respect of its Shortness, that it is not* Parvum in Multo; *and that Brevity may make a dull Discourse* tolerable.

I beg Pardon of the Learned Writers from whom I am forc'd to differ *in Opinion, as well as in Learning; I assure them 'tis unwillingly and with regret that I do. No* Canon *having limited what we shall* think *in* Agriculture, *nor condemned any of its* Tenets *for* Heresy, *every Man is therein a* Free-Thinker, *and must think according to the Dictates of his own Reason, whether he* will *or* no: *And such Freedom is given now-a-days in Speculations in* Natural Philosophy, *that 'tis common to see People even in print maintain that there are* Antipodes, *that the Earth moves round the Sun, and that he doth not set in the Sea, without being censur'd for these, and many other formerly* Heterodox *Opinions: And every one may now upon* solid *Arguments contradict* Aristotle *himself publickly any where, except in the* Schools: *But that mine are such, which I bring for maintaining the* Principles *I have advanced, I dare not affirm, being myself no competent Judge of them, as the Reader (especially the practising Reader) is; to his Decision must be left all that is disputable; his Partiality I have no Reason to apprehend; because 'tis in some Degree the Interest of every one who lives by Bread, that* true Principles *be established in Agriculture; but none ought to be allowed as such, 'till they have been thoroughly examined: Truth is like Gold, which the more it is tryed the brighter it appears, being freed from Dross. To be thus examin'd is the chief Design*

Design of publishing this Essay on Tillage *and* Vegetation: *And since Great Men seem to have made some Mistakes of Consequence in these Matters, it may well be supposed that I may have made many more; but of such of these as shall be adjudged to be of* Substance, *no Man shall be more willing than myself, to sign their* Condemnation; *and I believe the judicious Reader will excuse such Mistakes as are meerly of* Form: *His Candour will be also necessary for explaining some Things wherein a Mistake may arise from their being improperly express'd, and such he will construe as near as he can according to their intended Meaning, and when by that Misfortune they may seem to* jar *in one Part, he will endeavour to reconcile them by some other Part, or by the Tenor of the Whole.*

Every Man is best satisfy'd with Experiments made by himself; therefore I advise him who intends to practise, that he would repeat the Trials of all mine before he relies upon them; not that I have been unfaithful in the Making or Relating any of them (for I only made them in Search of the Truth for my own Satisfaction;) nor doubt I but that, if he follows the same Process, *his will succeed as mine did, and he may very likely draw many more* Inferences *from them, than I have.*

The Experiment of artificially pulverized Earth seeming to confirm what I had writ of the Pasture *of* Plants, *I could not forbear inserting it into my* Chap. *of* Tillage *as soon as I had read it; but Mr.* Evelyn *takes no Notice, that the* Surfaces *of those* fine *Parts, into which the Earth is* divided *by such* Pulveration, *is the* vegetable Pasture; *but runs into a* Simile *which would better fit the Climate of the* Indian Plants, *than* ours; *therefore I omit his* Theory, *lest it should offend the Modesty of the Ladies produc'd in a* chaster *Climate, if my Book should chance to have the Honour of their Perusal.*

I have sometimes, for Brevity's Sake, produc'd only one Instance instead of many which I could have given; I know that a single Instance is not sufficient of itself, where there is no other Proof; but when a Thing is first fully proved in Theory, *I think one Instance of* Fact *in* Practice *may be sufficient for its Confirmation; and besides, the Practiser will be abundantly furnished with Instances from his own Experience.*

The Matters of Fact *I have related, are not like some Stories told by* Travellers, *hard to be disproved if they are wrong.*

I am in some Doubt concerning the Height of the Great Mustard Plant; *because I did not measure it, but by the* Idea *I had of it four or five Years after I saw it: It came accidentally on the Side of a Row of* Horse-Ho'd Pease; *'twas in moist Land that had been well till'd and dunged: This being the first of the Species that I had seen in this Country, and having formerly taken half a Pint of Seed from one single Plant of it in* Oxford-shire, *which was less than one lateral Branch of this, I designed to measure the Seed it would produce; but unluckily the People who cut the* Pease, *chop'd it to Pieces with their* Hooks, *because it did spread very wide and stood in their Way; the* Seed *not being ripe I was disappointed in that; I might indeed have laid its Parts together and taken its Heighth, if I had had then any Thoughts of Writing, as I had not.*

This last Summer *I saw the Produce of two* St. Foin *Plants carefully weighed; they grew both in the same Ground, not far asunder, and of the same Age* (viz. *seven Years*); *the one stood single, and its Product weighed thirty seven Ounces and an Half; the other grew in a Bunch among many Neighbours, and was dug up, and its Product cut close to the Root weighed three Grains, which*

which is about a five thousandth Part of the other. I think this proves that 'tis not extravagant to say, *that one* single *(or thin)* St. Foin-Plant *may produce as much Grass or Hay as a thousand* thick *ones. And I have seen much* greater single St. Foin-Plants *than this.*

As to the Distances of Rows, and other Matters of Practice, I could only tell the Beginner what I have done, *and the Reasons (as far as a weak Memory, and my Notes serv'd me) whereon I proceeded; if he approves of them, they become his own, and he will proceed upon them as such; or if he doubts, it cannot cost much to satisfy himself by proper Trials.*

I have had great Crops of Turneps *in Rows three Foot asunder, and much greater than I could ever obtain from Rows thirty Inches asunder; but one Reason why I like six Foot Rows better is, that the largest* Turneps *are best for* Oxen, *and are pulled up and loaded with the least Expence; for if they should be as small as the sown* Turneps *hereabouts commonly are, that Expence would go a great Way into their Value. I find that the* least *competent Number will* (cæteris paribus) *always be the largest; but here is a great Inconvenience happens to* these *(especially when the sown* Turneps *generally fail, as they do this Year)* viz. *as soon as they begin to head, the lawless People begin upon them, and the Roots being then covered in the Ground, they cannot easily know which of them they* like *until they have pulled them up, and so perhaps spoil ten for one that they take; but when the* Turneps *are grown as big as* Apples, *they make less Waste, and carry away as many in a Bag, as (if they were suffer'd to attain their full Bigness) would load a Waggon. Thus is the best Crop soonest destroy'd. I confess this is an Objection, to which I can give no effectual Answer, except this, that in a plentiful Year, when the sown* Turneps stand, *their slow Growth renders them much sweeter for boyling than the drill'd; which Quality draws most of these Customers to them, and when they are too thick, if they take them with Discretion, they may rather mend than spoil the sown Crop; not that they will spare the drill'd* Turneps *for this last Reason (for they care not what Injury they do) but because they* like *not the Taste of them so well as that of the sown.*

But notwithstanding the Actions of these People are lawful in destroying my Crops, because effectually prohibited *by no* Law; *yet I cannot help thinking it very hard, after paying four Shillings in the Pound to the Poor's Tax, and extravagantly for the little Hand-Work bestow'd on my* Turneps, *that the best Product of my Inclosures should not be my own. But, to speak properly, there can be no Inclosures, where every Foot of Ground that lies without* Doors *is now common to these People.*

The particular Scheme of raising constant annual Crops of Wheat *without Dung or Fallow, is as yet only upon Probation; but by the six Crops I have had in that Manner, I see nothing against their being continued: This, 'tis true, requires greater Care in the Management than any other Branch of the* Husbandry; *but he who can do this without Dung or Fallow, may easily do it with one or both of them: And there may be such wet clayie Land, which the* Plow *cannot well pulverize without Help of the Ferment of Dung; and in any Sort of Land, when 'tis suspected that the Earth of the Partitions was not well ordered in the* Summer, *the best Remedy is to strow a small Quantity of* Malt-Dust, *or other* fine *Manure upon the Rows about the Month of* February; *this will strengthen the* Plants *and enable them to send their Roots into the Intervals the earlier in the* Spring.

Against

Against the Necessity of such wide Intervals as I like best, my Neighbour tells me, he has had five successive Crops of Wheat, and allows only four Foot Breadth to each Row and its Interval: His Rows have been sometimes double and sometimes treble: But his Ground is better than mine, and he bestows more Hand-Work upon it.

Many, 'tis like, will think this Repetition of Wheat-Crops rather a Curiosity than profitable, and in some Circumstances it may be so.

For planting a single Crop there are several Methods: The narrowest Interval wherein the Ho-Plow can be profitably exercis'd among Corn, is of thirty Inches, and if this should be uneven *by being the* parting *Space, it could not be Horse-Ho'd; therefore to keep it* even, *the Drill must have two Shares thirty Inches asunder, the Horse-Path being in the Middle betwixt them; by this Means the Partition, whose* Evenness *is not so necessary, will be the* parting *Space; but take Care that the Point of one Share do not incline downwards more than the other; for if it should, it will run very* deep *into the Ground, and the other will go very* shallow. *Also be sure not to let the Ho-Plow go forwards and backwards immediately in the same Interval; for if it does, the Furrows will all lie on the same Side, and then at the next Hoing, the Plow must go twice the Length of each Interval to plow one single Furrow; but this Inconvenience is easily prevented when foreseen.*

I have had many of these single Crops of Wheat in double Rows, and always observ'd it to be made very strong by the Use of the Hoe only; but I chuse to have the Intervals five or six Inches wider.

There may be another Way, to have one Crop of Wheat, not yet mention'd, and this is to go with the treble Drill twice instead of once upon each of the broad Ridges, which will make sextuple *Rows with five Partitions of seven Inches each. I had an Example of this the last Year on one outside Ridge. The first and sixth of these Rows standing next to the ho'd Earth were* strong, *and so were the third and fourth that stood on the Top of the Ridge, but the second and fifth standing lower, fell vastly short of the rest; yet if these last had had more fine Mould under them, I do not doubt but they might have been equal or nearly equal to the other.*

The worst Error I apprehend the Beginner will be liable to, is to expect the Benefit of Pulveration *where his Land is not pulverizd. I had this Year in the Middle of a Field of Wheat, about two or three Acres, the Earth of whose Partitions miss'd one of the Hoings in the precedent Summer, the Colour of this Wheat was plainly distinguished from that of the Wheat on both Sides of it at half a Mile's Distance in the Spring, and was not above half the Crop at Harvest; but if the rest of the Piece had not had a Hoing more than this had, the Whole then being alike poor, it would not have so plainly appeared, that the Poverty was for want of one more Hoing.*

By what I can hitherto observe in this Husbandry, the best Management always succeeds best, contrary to the Proverb *that says, That once in seven Years, the* worst *Husbands have the* best *Corn; which shews, that sometimes even to this Day,* Ceres *prefers her* Virgilians *for their* Demerits.

Although Wheat, as an exportable Commodity, be the fittest for a general Improvement; yet in some particular Places, other Vegetables, such as Rape, *or* Woad *may be more profitable than any Sort of Corn; and I have been told by one who has been long a Dealer in* Rape, *that he has made it larger and stronger in poor Land by Horse-Hoing, than he could ever make it in the richest Land by the common Method.*

What Pretenders or Impostors have taught or said of this Husbandry is unknown to me; nor am I answerable for any Follies they may have committed

mitted, since I gave sufficient Cautions against them in my Preface *to the* Specimen *publish'd for that Purpose almost two Years ago. To magnify it above what is just may be as injurious as ignorantly to undervalue it: If any have gone* rashly *into the Practice of it, 'tis probable they may go as* rashly *out of it, before they rightly know what it is.*

Some seem to have no other Notion of it, but as of a Trick to get Money, and write to me to send them Servants to instruct them in it, not considering how that Master is likely to be taught, *who must* learn *of his Servant, or that the being his* Scholar *might in one Sense justify the Practice (which is now become customary) of the Plowman's correcting his Titular Master.*

'Tis the most formidable Objection against our Agriculture, that the Defection of Servants and Labourers is such, that few Gentlemen can keep their Lands in their own Hands, but rather than make nothing *of them, they* let *them for a* little *to Tenants, who can bear to be insulted, assaulted, kick'd, cuff'd, and Bridewell'd with more Patience than Gentlemen are endow'd with.*

'Tis a publick Calamity, that the Lands of a Country must be all or mostly in the Hands of Rack-Renters, whose Interest it is (or at least they think so) that they never may be improv'd: We need not wonder at this when we see Copy-holders and Lease-holders for Lives oppose the Improvement of Inclosures for Fear their Fines *should be* raised.

The very different Regard which every Man naturally hath to the Interest of his Heirs, from that of his Successors, may be seen by the Poverty and unimproved Condition of St. Peter's *Patrimony compared with the hereditary States of* Italy: *And can we suppose that an* English Renter *should have more Honour in that Respect than his* Roman Holiness, *who doth not fear being turn'd out by a Successor in his Life-Time, as the Renter is sure to be when his Lease is ended if he has improv'd his Farm and will not Raise his Rent?*

The Discreditation that Gentlemen's Understandings lie under of wanting Capacity *to* manage *their Lands with Profit, as well as the most ignorant of the People can, would appear very unjust, could Gentlemen contrive* Automata *to do the Business appertaining to Tillage without Hands, at the Price that is reasonable to be given to Servants and Labourers for the same: Not that there is any Want of Hands to receive our Money, to take away our Goods, and to beat us; but such are wanting as will work faithfully at reasonable Wages: By the general Complaint of their Behaviour, they more resemble* French *Dragoons in Time of Persecution, than Servants. 'Tis not long since the publick News gave an Account of a noble Lord's being insulted by* Footmen *in the* Royal Palace; *if thus be their Manners when polish'd at* Court, *what* Idea *can be fram'd of their* Insolence *whilst they follow the Plow in the* Country?

They, who impute this Misfortune of the Land, to the Loss *of the Common Law, which* favour'd Agriculture, *and was to our Ancestors a* better Inheritance, than that which came to them from their Parents; *pretend to prove, that the* Statute *of* Labourers *hath turn'd more Gentlemen out of their Estates than the* Norman Conquest *did; but their Arguments being too numerous to be here recited, I shall only give them this general Answer,* viz. *That their Land of* France *are occupy'd with Pleasure and Profit by the Owners, who live well upon them, and leave them planted and improved to their Heirs, after having paid almost as much in Taxes to their King, as our Tenants* pay *in Rent to their Landlords for better Land: And yet there is none of our* Common Law *in* France; *every Thing* there *is decided by* Trials *at* Discretion; *but then, indeed, as the Magistrates are* arbitrary *over the*

People, so the King is arbitrary over the Magistrates, and in Favour of Tillage he will not suffer, that the Possessors of Land shall be trampled on by Servants and Labourers, or other Infimates *of the Country: Servants must* there *obey their Masters, as far as is necessary for carrying on their Business; and the Labourer must be* worthy of his Hire; *for if when he is able he will not* work, *neither shall he* eat: *And they are so unaccustomed to Idleness, that none are* starved, *that I can bear of.*

This may perhaps serve for an Answer to those who assert, that there can be no Justice without Juries; *but whatever becomes of our Lands, I pray God to defend us against a* French *Government in* England.

I can hardly believe, that the enormous Behaviour of Servants, &c. *is so* general *as 'tis commonly reported to be: Sure the Freeholders of Counties would* petition *their respective* Representatives in Parliament, *in hopes, that so publick and heavy a* Grievance *might be redress'd; for the same Power which took away Part of the Common Law can restore it in its pristine Purity, and enable the Owners of Lands to occupy and improve them as freely, at least, as their Ancestors might before* 5°. Eliz.

The Hoing Practice would profitably employ many more Hands, than the common Husbandry, and procure more Bread for them: But if through the aforesaid unfortunate Circumstances it cannot be frequent in South Britain, *which seems to be the most proper Climate in the World for it; yet if it shall be useful to any other of his Majesty's Dominions, I shall think my Labour amply rewarded by that Success. And even* here *those very Inconveniences that attend Arable Land make the Improvement by* St. Foin *the greater; and in this many others as well as myself have found my Drill to be very advantageous; not that the Drill is necessary for planting it in all Lands; for in most Soils that are rich and proper,* St. Foin *will prosper and last, in what Manner soever 'tis planted; but in a Chalk with a poor thin Staple, I never knew it succeed, unless when it was properly drill'd, or else yearly manur'd by Peat-Ash, Soot, or Coal-Ash, at a great Expence.*

The Drill may also be serviceable to the old Husbandry in some Respects; as when Land having been plowed dry, and lain till the Rain comes, its Surface is grown so hard, that the Seed-Wheat cannot be cover'd by Harrows or Drags, then the Drill will make Channels, sow in the Seed, and cover it effectually.

Another general and no inconsiderable Advantage of its Use is, that it can save more than half the Seed that is sown, and plant the Land better (they may also hand-hoe between the nearest Rows if they please, or pull out the Weeds without treading on the Corn) but it saves more of some Sorts of Seed than of others.

The first Occasion of making my Drill for fine *Seeds was this: It was very difficult to find a Man that could sow Clover tolerably; they had a Habit (from which they could not be driven) to throw it once with the Hand to two large Strides, and go twice on each Cast; thus with nine or ten Pound of Seed to an Acre, two Thirds of the Ground was unplanted, and on the rest 'twas so thick that it did not prosper. To remedy this, I made a Hopper, to be drawn by a Boy that planted an Acre sufficiently with six Pound of Seed; but when I added to this Hopper an exceeding light Plow, that made six Channels eight Inches asunder, into which two Pound to an Acre being drill'd, the Ground was as well planted. This Drill was easily drawn by a Man, and sometimes by a Boy.*

But the Sort of Seed of which the most is saved by the Drill is St. Foin *for nineteen Parts of twenty may be* well *saved by it.*

I fear my Descriptions in the five last Chapters, for want of technical Words, may not be so perspicuous as I could wish; and that there may be some little Errors in the Plates by Reason of the Distance I live at from Engravers; but I hope there is none in any material Part, and that by the Cuts and their Explanations all these Instruments may be made to perform perfectly: And I suppose 'tis impossible to make a bad Drill to agree with all the Rules there laid down.

Every Figure *of the Drill is in its full Dimensions where none are given. If the Angle of Inclination of the Sides of the Mortise should be but of six Degrees instead of eight, in the wide Boxes there described it might do well enough; but in narrow Mortises, for drilling* rough *Seeds, eight Degrees of Inclination are necessary; as when formerly I drilled* St. Foin *with Mortises three Quarters of an Inch wide, the Wheels being low. Indeed if I were now to make a Drill for* St. Foin *only, even on high Wheels, the Mortises should not exceed one Inch in width: And then eight Degrees of Inclination would be safer than six, and eight are not injurious to the widest Mortise, but only in the wide there is not that Exactness required as is in the narrow.*

I am sorry it happen'd, that it was not in my Power to describe in Cuts (not having it by me) a particular Drill for planting Turneps between Rows of Corn, both in wide and in narrow Intervals; the Advantage is such, that being but small *at Harvest, they do no perceivable Damage to the Corn, and yet afterwards grow* large *by Hoing, and being fed off by Sheep in the Winter, afford considerable Profit, and also enrich the Land for a following Spring-Crop of Corn.*

This Drill must have only one Share, and that must go on the pulverix'd Earth very near to the Rows, and one Wheel only, to go in the Middle of the Interval; the Hopper fastened immoveably to the Plow, in such a Manner, that nothing may take hold of the Corn. It may be drawn by a Man.

One Cause that made the three Parts of the Book (that is to say, the Theory, or speculative Part, the practick Part, and the Descriptions of the Tools) the more defective was, that all three were too many for me to make perfect at once; *and two would have been useless without the third; therefore it was better to give but a Sketch of all, than to have made any two of them never so full and perfect, leaving out the other. But if this my first Essay should meet with Encouragement, 'tis possible (tho' barely possible) that I may write a* Supplement *containing Amendments and Additions to every Part, together with Answers to Objections, which 'tis impossible for me to answer before they are* made, *or before I am* apprised *of them.*

THE CONTENTS.

THE READER *is desir'd to amend the following* Errata *in the Book before he* reads *it; especially the five last Chapters; the Author not having had an Opportunity either of* seeing *any of those Sheets, or of* reading *the fair Copy of them (from which they were printed) till after they were all printed off.*

The ERRATA.

IN the Preface. Page i. line 19. read have had Occasion. l. 38. r. Sown-Crops. p. ii. l. 43. for every, r. any. p. iii. l. 46. r. had then had. p. iv. l. 34. r. *prohibited* (effectually). p. viii. l. 41. r. *small* Seeds.

Page 3. line 12. for near, read nearly of. p. 5. l. 24. r. *Mint* F. p. 6. l. 6. r. Trough. p. 7. l. 2. r. both that the deep. l. 26. for Whither, r. Whether. p. 10. l. 30. after Creation, dele and. p. 11. l. 25. after Hundred, r. Pound. p. 14. l. 26. r. but not at all. p. 15. l. 45. for or, r. of. p. 16. l. 6. for the, r. they. p. 17. l. 38. for natural, r. artificial. p. 20. l. 31. r. for many Years. p. 21. l. 36. for Cot. r. Columella. p. 22. l. 23. after *Mortuum*, r. or *Terra damnata*. p. 26. l. 27. r. *Fenicchio*. p. 28. l. 24. r. *Sarriandus*. p. 29. l. 11. for Author, r. Columella. p. 34. l. 17 and 18. for Thirty-Six, r. Thirty. p. 37. l. 19. r. a Dry. p. 40. l. 42. for *Sorts*, r. Species. p. 42. l. 24. r. increase. p. 44. l. 23. for it, r. *mine*. p. 51. l. 45. r. Rows. p. 52. l. 18. r. Interval. p. 57. l. 8. for any, r. a much. l. 35. for of, r. at. p. 61. l. 15. for than r. that. p. 65. l. 34. for as often, r. has often. p. 67. l. 45. for was, r. were. p. 68. l. 20. for Effigy, r. *Effigie*. p. 69. l. 7. r. Turchon. p. 73. l. 20. r. Faba. p. 80. l. 39. for have, r. hath. p. 81. l. 11. for its, r. it. p. 82. l. 39. r. preferable to. p. 84. l. 45. r. some Part of. p. 88. l. 29. after Rick, dele it. p. 90. l. 44. r. too luxuriant. p. 91. l. 55. for which, r. this. p. 92. l. 10. for as, r. the same that. l. 29. r. *Trefil*. p. 95. l. 47. dele as. p. 98. l. 45. for should, r. shall. p. 100. l. 13. for Thirty, r. Thirty-Three. l. 14. for distant, r. Distance. l. 35. for Bunches, r. Ounces. p. 108. l. 19. for Mint market *(b)* r. *Mints* G. *and H; H*. p. 117. l. 22. for they, r. it. p. 123. l. 12. r. Plowings. l. 41. r. the Holder. p. 124. l. 14. r. at Six-pence. l. 19. dele for, dele three. l. 47. after suffice, dele and. p. 128. l. 38. for it lying, r. is because it lies. p. 131. l. 22. dele the. p. 134. l. 37, and 38. for much poorer, r. poor. p. 136. l. 23. dele the. p. 137. l. 51. dele in. p. 143. l. 31. r. Poll-Wedge i. p. 144. l. 21. for rise, r. raise. p. 145. l. 29. dele long. l. 30. r. Link y. p. 146. l. 10. r. prevent. p. 148. l. 9. after and, r. then. l. 32. r. make. p. 156. l. 6. r. Sorts. l. 30. after equal, r. and equidistant. l. 33. for *Centsoine*, r. St. Foin. p. 157. l. 3. r. appears. l. 33. dele A. p. 158. l. 21. r. G is the Hole for another. l. 48. for Flanks, r. Flaunches. p. 159. l. 10. for in, r. for. p. 160. l. 20. r. Nut. p. 162. l. 12. after Angle, r. of each of these. l. 13. for seven Degrees and thirty-Minutes, r. six Degrees. p. 164. l. ult. r. St. Foin. p. 166. l. 36. r. Tenon. p. 167. l. 11. after Inch, r. at its upper Part. p. 168. l. 2. for Bottom of the Sheat, r. Tail of the Share. l. 37. for Crevice, r. Rabbet. p. 169. l. 25. r. Cycles. p. 171. l. 42. for in, r. into. p. 175. l. 37. r. these four prick'd Lines. p. 177. l. 19. dele the Thickness of. l. 35. r. the more. l. 46. for of, r. on. p. 178. l. 20. r. a Box. p. 80. l. 50. for for what, r. from what. p. 181. l. 5. for Plank, r. Rank. l. 45. r. Shares. p. 182. l. 8. r. a Sheat. p. 183. l. 23. after Sixteen, r. Inches. l. 32. for Rows, r. Acres. p. 185. l. 11. r. into the Forks. l. ult. for Inches, r. Sides. p. 188. l. 37. r. the Piece E. p. 191. l. 32. r. Funnel. p. 192. l. 18. r. Standards. p. 194. l. 29. for Bottom with its *Mortise*, r. Beam with its *Mortiser*. p. 195. l. 19. for plac'd, r. plow'd. p. 198. l. 25. r. at, or below a. l. 28. r. the Beam must. l. ibid. for which is just level, r. which at b is just even. l. 41. for B C, r. bc. l. 45. for cd, r. ed. p. 199. l. 28. for Bottom, r. Beam. p. 200. l. 6. for downwards, r. upwards. p. 15. l. 49. for greatness, r. greatest. p. 19. l. 44. r. elaborated.

I should acknowledge that all the *English* Verses in the IXth. Chapter were transcrib'd from an anonymous Translator; I chose to make use of these, because I thought they came *nearer* to *Virgil's Meaning* than any other Translation I had seen.

Note, The Length of a common Plow-Share's Neck, doth not always bear so great a Proportion to its other Parts, as of that in Fig. 1. of Plate 1. but very often the same as that of Fig. 2. and the other Shares shewn in the said Plate.

The Plow-wright in placing the Sheat into these Plows, ought to observe the *Obliquity* of it describ'd in Fig. 4. (the Fore-End of the long Handle X, and of the Earth-Board nearly conforming thereto) which *Obliquity* is greater than it seems to appear in the *Perspective* View of it in the Plow Fig. 3.

He must not work by that *Perspective* in Fig. 1. which makes the long Handle X seem *crooked* tho' it is *streight* as in Fig. 13.

Note likewise, There might be perhaps some Ounces of Brass *saved* in casting the large Seed-Box, if its hinder Part were cast *thinner*, except where the Screw goes thorough it to hold the two Halves together.

Note also, The Drill-Sheats in Plate 4. must be *tapering downwards*, so that they may not be *thicker* in that Part that goes *within* the Ground, than the Breadth of the Share.

Chap. I. *Of ROOTS.*

SINCE the most immediate use of *Agriculture*, in feeding Plants, relates to their *Roots*, they ought to be treated of in the first Place.

Roots are very different in different Plants, but 'tis not necessary here to take notice of all the nice Distinctions of them; therefore I shall only divide them in general into Two sorts, *viz. Horizontal-Roots*, and *Tap-Roots*, which may include them all.

All have Branchings and Fibres going all manner of ways, ready to fill the Earth that is open.

But such *Roots* as I call Horizontal (except of Trees) have seldom any of their Branchings Deeper than the Surface or Staple of the Earth, that is commonly mov'd by the Plow or Spade.

The Tap-Root commonly runs down Single and Perpendicular, reaching some times many Fathoms below.

This (tho' it goes never so deep) has Horizontal ones passing out all round the Sides; and extend to several Yards distance from it, after they are by their minuteness, and earthy Tincture, become Invisible to the naked Eye.

A Method how to find the Distance to which *Roots* extend Horizontally.

A Piece or Plot dug and made fine in whole hard Ground, the end *A* 2 Foot, the end *B* 12 Foot, the length of the Piece 20 Yards; the Figures in the middle of it are 20 *Turnips*, sown early and well Ho'd.

The manner of this Hoing must be at first near the Plants, with a Spade, and each time afterwards, a Foot farther distance, 'till all the Earth be once well dug; and if Weeds appear where it has been so dug, Hoe them out shallow with the Hand-Hoe. But dig all the Piece next the out Lines deep every time, that it may be the finer for the *Roots* to enter, when they are permitted to come thither.

If these *Turnips* are all gradually bigger, as they stand nearer to the end *B*, 'tis a Proof they all extend to the outside of the Piece, and the *Turnip* 20, will appear to draw Nourishment from Six Foot distance from its Center.

But if the *Turnips* 16, 17, 18, 19, 20, acquire no greater Bulk than the *Turnip* 15, it will be clear, that their *Roots* extend no farther than those of the *Turnip* 15 does; which is but about 4 Foot.

By this Method the Distance of the Extent of *Roots* of any Plant, may be discover'd.

There is also another way to find the Length of *Roots*, by making a long narrow Trench, at the distance you expect they will extend to, and fill it with Salt; if the Plant be kill'd by the Salt, 'tis certain that some of the *Roots* enter into it.

What put me upon this Method was an Observation of Two Lands (or Ridges) drill'd with *Turnips* in Rows, a Foot asunder, and very even in them; the Ground, at both ends and one side, was hard and unplow'd, the *Turnips* not

 being

being Ho'd, were very Poor, Small, and Yellow, except the Three outside Rows, *B*, *C*, *D*, which stood next to the Land (or Ridge) *E*, which Land being Plow'd and Harrow'd, at the time the Land *A* ought to have been Ho'd, gave a dark flourishing Colour to these three Rows; and the *Turnips* in the Row *D*, which stood farthest off from the new Plow'd Land *E*, received so much benefit from it, as to grow Twice as big as any of the more distant Rows. The Row *C*, being a Foot nearer to the new Plow'd Land, became Twice as large as those in *D*; but the Row *B*, which was next to the Land *E*, grew much larger yet.

F is a Piece of hard whole Ground, of a about two Perch in length, and about 2 or 3 Foot broad, lying betwixt those Two Lands, which had not been Plow'd that Year; 'twas remarkable, that during the length of this Interjacent hard Ground, the Rows *B*, *C*, *D*, were as Small and Yellow as any in the Land.

The *Turnips* in the Row *D*, about three Foot distant from the Land *E*, receiving a double Increase, proves they had as much Nourishment from the Land *E*, as from the Land *A*, wherein they stood; which Nourishment was brought by less than half the number of *Roots* of each of these *Turnips*.

In their own Land they must have extended a Yard all round, else they could not have reach'd the Land *E*, wherein 'tis probable these few Roots went more than another Yard, to give each *Turnip* as much Increase as all the Roots had done in their own Land.

Except that it will hereafter appear, that the new Nourishment taken at the Extremities of the Roots in the Land *E*, might enable the Plants to send out more new Roots in their own Land, and receive something more from thence.

The Row *C* being Twice as big as the Row *D*, must be suppos'd to extend Twice as far; and the Row *B*, four times as far, in proportion as it was of a Bulk Quadruple to the Row *D*.

A *Turnip* has a Tap-Root, from whence all these Horizontal-Roots are deriv'd. And 'tis observable, that betwixt these two Lands, there was a Trench, or Furrow, of about the Depth of Nine or Ten Inches, where these Roots must descend first, and then ascend into the Land *E*: but it must be noted, that some small quantity of Earth was, by the Harrowing, fall'n into this Furrow, else the Roots could not have pass'd thro' it.

Roots will follow the open Mould, (*) by descending Perpendicularly, and mounting again in the same manner: As I have observ'd the Roots of a Hedge to do, that have pass'd a steep Ditch two Foot deep, and reach'd the Mould on the other side, and there fill it; and digging Five Foot distant from the Ditch, found the Roots large, tho' this Mould was very shallow, and no Roots below the good Mould.

So in an Orchard, where the Trees are planted too Deep, below the Staple

(*) A Chalk-Pit, contiguous to a Barn, the Area of which being about 40 Perch of Ground, was made clean, and swept; so that there was not the Appearance of any Part of a Vegetable, more than in the Barn's Floor: Straw was thrown from thence into the Pit, for Cattle to lye on; The Dung made thereby was carried away about Three Years after the Pit had been cleansed; when, at the Bottom of it, and upon the Top of the Chalk, the Pit was cover'd all over with Roots, which came from a Witch-Elm, not more than Five or Six Yards in Length, from Top to Bottom, and which was about Five Yards above, and Eleven Yards from the Area of the Pit; so that in Three Years the Roots of this Tree extended themselves Eight times the Length of the Tree, beyond the Extremities of the Old Roots, at Eleven Yards distance from the Body: The Annual-increased Length of the Roots was near Three times as much as the Height of the Tree.

Wheat, Drill'd in Double Rows in *November*, in a Field well Till'd before Planting, look'd Yellow, when about Eighteen Inches high; at Two Foot distance from the Plants, the Earth was Ho-Plow'd, which gave such Nourishment to 'em, that they recover'd their health, and changed their sickly Yellow, to a lively Green Colour.

or good Mould, the Roots, at a little distance from the Stem, are all as near the upper Superficies of the Ground, as of those Trees, which are Planted higher than the Level of the Earth's Surface.

But the Damage of Planting a Tree too low in moist Ground is, that in Passing thro' this low part, standing in Water, the Sap is Chill'd, and its Circulation thereby retarded.

One Cause of People's not suspecting Roots to extend to the Twentieth part of the Distance, which in reality they do, was from observing these Horizontal-Roots, near the Plant, to be pretty Taper; and if they did Diminish on, in Proportion to what they do there, they must soon come to an end. But the Truth is, that after a few Inches, they are not discernibly Taper, but pass on to their ends very ~~near~~ nearly the same bigness; this may be seen in *Roots* growing in Water, and in some other, tho' with much Care and Difficulty.

In pulling up the aforemention'd *Turnips*, their Roots seem'd to end at few Inches distance from the Plants, they being farther off, too fine to be perceiv'd by ordinary Observation.

I found an extream small Fibre on the side of a *Carrot*, much less than a Hair, but thro' a Microscope it appear'd a Large Root, not Taper, but broken off short at the end, which its probable might have (before broken off) extended near as far as the *Turnip* Roots did. It had many Fibres going out of it, and I have seen that a *Carrot* will draw Nourishment from a great Distance, tho' the Roots are almost Invisible, where they come out of the *Carrot* itself.

By the Piece *F* may be seen, that those Roots cannot penetrate, unless the Land be open'd by Tillage, &c.

And 'tis very likely, and may be prov'd by another Method, That as Roots are but as Guts inverted, they do bear perhaps that Proportion to the Stem or Stalks of Plants, as Guts do to the Bodies of Animals, (*) *viz.* Several times longer than the Stalks.

As Animals of different Species have their Guts bearing different Proportions to the length of their Bodies; so 'tis probable, different Species of Plants may have their Roots as different. But if those which have shorter Roots have more in Number, and having set down the means how to know the Length of them in the Earth, I leave the different lengths of different Species to be examin'd by those who will take the Pains of more trials. This is enough for me, that there is no Plant commonly Propagated, but what will send out its Roots far enough, to have the benefit of all the Ho'd Spaces or Intervals, I in the following Chapters allot them, even tho' they should not have Roots so long as their Stalks or Stems.

(Roots of amphibious Plants grow longer, when in Earth, than when in Water.)

And this great length of Roots will appear very reasonable, if we compare the largeness of the Leaves, (which are the Parts ordain'd for Excretion) with the smallness of the Capillary Roots, which must make up in Length or Number what they want in Bigness, being destin'd to range far in the Earth, to find out a supply of Matter to maintain the whole Plant; whereas the chief office of the Stalks and Leaves, is only to receive the same, and to discharge into the Atmosphere such part thereof as is found unfit for Nutrition; a much easier Task than the other, and consequently fewer Passages suffice, these ending in an obtuse form; for otherwise the Air would not be able to sustain the Stalks and

(*) An Animal has but one Gut, tho' its Parts be distinguish'd by several Names; and the greater Number of Roots a Plant has, the less Length of them will suffice.

Leaves in their upright Posture; but the Roots, tho' very weak and slender, are easily supported by the Earth, notwithstanding their Length, Smallness and Flexibility.

Plants have no Stomach, nor *Æsophagus*, which are necessary to convey the mass of Food to an Animal: which mass being exhausted by the Lacteals is Eliminated by way of Excrements, but the Earth itself being that mass to the Guts (or Roots) of Plants, they have only fine Recrements, which are thrown off by the Leaves.

In this, Animal and Vegetable Bodies agree, that Guts and Roots are both Injured by the open Air; and Nature has taken an equal care, that both may be supply'd with Nourishment (without being expos'd to it.) Guts are supply'd from their Insides, and Roots from their Outsides.

All the Nutriment (or *Pabulum*) which Guts receive for the use of an Animal, is brought to them; but Roots must search out and fetch themselves all the *Pabulum* of a Plant; therefore a greater quantity of Roots, in Length or Number, is necessary to a Plant, than of Guts to an Animal.

All *Roots* are as the Intestines of Animals, and have their Mouths or Lacteal Vessels opening on their outer spongey Superficies, as the Guts of Animals have theirs opening in their inner spongey Superficies.

The Animal Lacteals take in their Food by the pressure that is made from the Peristaltick Motion, and that Motion caus'd by the Action of Respiration, both which Motions press the Mouths of the Lacteals against the Mass or Soil which is within the Guts, and bring them into closer contact with it.

Both these Motions are supply'd in Roots by the pressure occasion'd by the Increase of their Diameters in the Earth, which presses their Lacteal Mouths against the Soil without. But in such Roots as live in Water, a Pressure is constantly made against the Roots by the weight and fluidity of the Water; This presses such fine Particles of Earth it contains, and which come into contact with their Mouths, the closer to them.

And when *Roots* are in a Till'd Soil, a great pressure is made against them by the Earth, which constantly subsides and presses their Food closer and closer, even into their Mouths; until itself becomes so hard and close, that the weak sorts of Roots can penetrate no farther into it, unless re-open'd by new Tillage, which is call'd Hoing.

The Colour of the Roots being different from that of Leaves, and some other external parts of a Plant, is no more an Argument against the Circulation of the Sap, than the Colour of the Guts, being different from that of the Lungs, and other Parts of an Animal Body, is an Argument against the Circulation of the Blood.

As far as I can yet discover, all Roots, properly so call'd, are White; and a Red Carrot, when it stands for Seed, sends out in the Spring from all Parts of it, Fibrous Roots, as White as those of any other Plant. The white Colour proceeds from the Chyliferous Vessels.

When a good Number of Single-Mint Stalks had stood in Water, until they were well stock'd with Roots from their Two Lower Joints, and some of them from Three Joints, I set one into a Mint-Glass, mark'd *A*, full of Salt-water, this Mint *A* became perfectly Dead within Three days.

Another *Mint*, mark'd *B*, I put into a Glass of fair Water, but I immers'd one string of its Roots (being brought over the Top of that Glass) into another Glass of Salt water, contiguous to the Top of the other Glass; This *Mint* dy'd also very soon.

Of

Of another, mark'd *C*, (standing in a Glass of Water and Earth till it grew Vigorously) I ty'd one single Root into a Bag, which held a Spoonful of dry Salt, adjoining to the Top of the Glass, which kill'd this strong Mint also. I found that this Salt was soon dissolv'd, tho' on the outside of the Glass; and tho' no Water reach'd so high, as to be within Two Inches of the Joint which produc'd this Root: The Leaves of all these were salt as Brine to the Taste.

Of another, mark'd *D*, I put an upper Root into a small Glass of Ink, instead of a Bag of Salt, in the manner above mention'd; this Plant was also kill'd by some of the Ink Ingredients. The Blackness was not communicated to the Stalk, or Leaves, which inclin'd rather to a Yellowish Colour as they died, which seem'd owing to the *Copperas*.

I made a very strong Liquor with Water, and bruised Seeds of *Wild-Garlick*, and filling a Glass therewith, plac'd the Top of it close to the Top of another Glass, having in it a Mint, mark'd *E*, Two or Three of whose upper Roots, put into this stinking Liquor, full of the bruised Seeds, and there remaining, it kill'd the Mint in some time, but it was much longer in dying than the others were with Salt and Ink. It might be, because these Roots in the *Garlick* were very small, and did not bear so great a Proportion to their whole System of Roots, as the Roots, by which the other Mints were poison'd, did to theirs.

When the Edges of the Leaves began to change Colour, I chew'd many of them in my Mouth, and found at first the strong Aromatick flavour of Mint, but that was soon over; and then, the nauseous taste of *Garlick* was very perceptible to my Palate.

I observ'd, that when *Mint* had stood in a Glass of Water, until it seem'd to have finish'd its growth, the Roots being about a Foot Long, and of an earthy Colour, after putting in some fine Earth, which sunk down to the bottom, there came from the upper Joint a new Sett of White Roots, taking their course on the outside of the heap of Old Roots downwards, until they reach'd the Earth at the bottom, and then after some time came to be of the same earthy Colour with the Old ones.

The *Mint G* being well rooted from Two Joints, about Four Inches asunder, I plac'd the Roots of the lower Joint in a deep Mint-Glass, having Water at the bottom, and the Roots of the upper Joint into a square Box, contriv'd for the purpose, standing over the Glass, and having a bottom, that open'd in the middle, with a Hole, that shut together close to the Stalk, just below the upper Joint; then laying all these upper Roots to one Corner of the Box, I fill'd it with Sand, dry'd in a Fire-shovel, and found, that in one Night's time, the Roots of the lower Joint, which reach'd the Water at the bottom of the Glass, had drawn it up, and imparted so much thereof to those Roots in the Box above, that the Sand, at that Corner where they lay, was very wet, and the other Three Corners dry. This Experiment I repeated very often, and it always succeeded as that did.

And for the same purpose I prepar'd a small Trough, about Two Foot Long, and plac'd a Mint-Glass under each end of the Trough; over each Glass I plac'd a Mint, with half its Roots in the Glass, the other half in the Trough: The Mints stood just upon the ends of the Trough. Then I cover'd these Roots with pulveriz'd Earth, and kept the Glasses supply'd with Water; and as oft as the white fibrous Roots shot thro' the Earth, I threw on more Earth, 'til the Trough would hold no more, and still the white Fibres came thro', and appear'd above it, but all seem'd (as I saw by help of a course Microscope) to turn, and when they came above Ground, their Ends enter'd into it again. These Two *Mints* grew thrice as Large as any other *Mint* I had, which were

many,

many, that stood in Water, and much larger than those which stood in Water with Earth in it: They being all of an equal bigness when set in, and set at the same time. Tho these Two standing in my Chamber, never had any Water in their Earth, but what those Roots, which reach'd the Water in the Glasses sent up to the Roots, which grew in the Trough. The vast quantity of Water these Roots sent up, being sufficient to keep all the Earth in the Trough moist, tho' of a Thousand times greater quantity than the Roots which water'd it, makes it probable, that the Water pass'd out of the Roots into the Earth, without mixing at all with the Sap, or being alter'd to any degree. The Earth kept always moist, and in the Hot Weather there would not remain a Drop of Water in the Glasses, when they had not been fresh supply'd in Two Days, and One Night; and yet these Roots in the Glasses were not dry'd, tho' They stood sometimes a whole Day and Night thus in the empty Glasses. These Two Mints have thus liv'd all one Summer, and are mark'd *H H.*

Remarks on the *Mints*, &c. Tho' the Vessels of Marine Plants be some ways fortify'd against the Acrimony of Salt, as Sea-fish are: Yet the Mints *A, B, C,* all shew, that Salt is Poison to other Plants.

The Reason why the Salts in Dung, Brine, or Urine, does not kill Plants in the Field, or Garden, is, that their Force is spent in acting upon, and dividing the Parts of Earth; neither do these Salts, or at least any considerable Quantity of them, reach the Roots.

I try'd Salt to many Potatoes in the Ground, being undermin'd, and a few of their Roots put into a Dish of Salt-water, they all Died sooner or later, according to their Bigness, and to the Proportions the Quantity of Salt apply'd did bear to them.

By the Mints *B, C, D, E,* it appears, that Roots make no distinctions in the Liquor they imbibe, whether it be for their Nourishment or Destruction. And that they do not Insume what is disagreeable, or Poison to them, for lack of other Sustenance; since they were very vigorous, and well fed in the Glasses, at the time when the most inconsiderable Part of their Number had the Salt, Garlick, and Ink offer'd to them.

The *Mint F* shews, that when new Earth is apply'd to the old Roots, a Plant sends out new Roots on purpose to feed on it: And that the more Earth is given it, the more Roots will be form'd, by the new Vigour the Plant takes from the addition of Earth. This corresponds with the Action of Hoing; for every time the Earth is mov'd about Roots, they have a Change of Earth, which is New to them.

The *Mint G* proves, that there is such a Communication betwixt all the Roots, that when any of them have Water, they do impart a share thereof to all the rest: And that the Root of the lower Joint of this Mint, had Passages (or Vessels) leading from them, through the Stalk, to the Roots of the upper Joint; tho' the clear Stalk (through which it must have pass'd) that was betwixt these Two Joints, was several Inches in Length.

This accounts for the great Produce of Long tap-rooted Plants, such as *Lusern* and *St. Foin*, in very dry Weather: for the Earth at a great Depth is always moist. It accounts also for the good Crops we have in dry Summers, upon Land that has a Clay bottom; for there the Water is retain'd a long time, and the lower Roots of Plants which reach it, do like those of this Mint, send up a share to all the higher Roots.

If those Roots of a Plant, which lie at the Surface of the Ground, did not receive moisture from other Roots which lie deeper, they could be of no use in dry Weather. But 'tis certain, that if this dry Surface be mov'd or dung'd, the

the Plant will be found to grow the faster, tho' no Rain falls; which seems to prove, both the deep Roots communicate to the shallow, a share of their Water, and receive in return from them a share of Food, in common with all the rest of the Plant, as in Mints, *F, G, H H,* they did. that

The Two *Mints*, mark'd *H H*, shew, that when the upper Roots have moisture (as they had in the Earth in the Trough, carried thither first by the lower Roots) they impart some of it to the lower, else these could not have continu'd Plump and Fresh, as they did for 24 Hours in the empty Glass. And I have since observed them to do so, in the cooler Season of the Year, for several Weeks together, without any other Water, than what the upper Roots convey'd to them, from the moist Earth above in the Trough. I know not what time these Roots might continue to be supply'd thus in the hot Weather, because I did not try any longer, for fear of killing them.

But it must be noted, that the Depth of the Glass protected the Roots therein from the Injury of the Motion of the free Air, which would have dry'd them, if they had been out of the Glass.

In this Trough is shewn most of the Hoing Effects, *viz.* That Roots, by being broken off near the Ends, encrease their Number, and send out several where one is broken off.

That the Roots encrease their Fibres every time the Earth is stirr'd about them.

That the stirring the Earth makes the Plants grow the faster.

The *Mint*, discharging such a vast quantity of Water into the Earth in the Trough, shews that there are Passages by which the Roots do as it were spew out, what is superfluous, and would surfeit the Plant, if it entered into the Sap in too great abundance, more and faster than it could be purify'd by the Leaves.

Whether this Water, which is so soon return'd out of the Roots, be at all alter'd, during its short stay there, I can't say, 'till I see the Consequence of some Experiments, which will, I believe, inform me, *viz.*

Half the fibrous Root of *Garlick* set in Water, the other Half in a Trough of Flower above it, as those of the *Mint* were; if the Water the under Garlick Roots send to the upper, be spew'd out into the Flower of a Garlick taste, then we know 'tis alter'd, otherwise conclude 'tis not alter'd. A *Mint* is not of Flavour strong enough to prove this.

Chap. II. *Of LEAVES.*

LEAVES are the Parts, or Bowels of a Plant, which perform the same Office to Sap, as the Lungs of an Animal do to Blood; that is, they purify or cleanse it of the Recrements, or fuliginous Steams, received in the Circulation, being the unfit Parts of the Food; and perhaps some decay'd Particles, which fly off the Vessels, thro' which Blood and Sap do pass respectively.

Besides which Use, the Nitro-aerious Particles may there enter, to keep up the vital Ferment or Flame.

Mr. *Papin* shews, that Air will pass in at the Leaves, and out thro' the Plant at the Roots; but Water will not pass in at the Leaves; and that if the Leaves have no Air, a Plant will dye, but if the Leaves (being left on the outside of the Receiver, parted by a Hole, cemented with Wax) have Air, tho' the Root remain in Water *in vacuo*, the Plant will live and grow.

Dr. *Grew*, in his Anatomy of Plants, mentions Vessels, which he calls, Network, Cobweb, Skeins of Silk, &c. But above all, the multitude of Air-Bladders

ders in them, which I take to be of the same use in Leaves, as the Vesiculæ are in Lungs. Leaves being as Lungs inverted, and of a broad and thin Form; their Vesiculæ are in Contact with the free open Air, and therefore have no need of Trachea, or Bronchia, nor of Respiration.

Lungs being situate within the Animal's Body, their Vesiculæ could have no Communication with the Atmosphere, without the Trachea and Bronchia; and even there, the Aerial Influence would be intercepted by the fuliginous and recrementitious Steams, were they not thence expell'd by the Systole in Expiration; the want of which, is the Cause of an Asthma, a Disease, Leaves are not affected with, because their Vesiculæ are always contiguous to the nitrous Air, which continually presses against them.

Sanctorius, who by his Statick-Chair, found Five Eights of the Nourishment, or a Weight equal to it, taken by a Man, passes off by insensible Perspiration; could he have invented any Method to calculate the Quantity of that Part of those Perspirations, which pass off thro' the Trachea from the Lungs, I believe he would have found the most of it to pass that way (1).

When the Blood enters the Lungs, from the Right Ventricle of the Heart, 'tis so full of this fuliginous Matter, that its Colour is blacken'd with it. This is all discharg'd in passing thro' the Lungs; for when the Blood arrives at the Heart's Left Ventricle, being purify'd of its Recrements, 'tis become of a pure florid Red Colour; and in cold Weather these Steams may be seen to issue out from the Trachea in great Quantities, which are constantly supply'd by the Nourishment taken in at the Lacteals of the Guts. *Sanctorius's* other Three Parts were but as the Soil, from whence the Five Parts are extracted.

Since Leaves do so much resemble Lungs, in the Anatomy of their Organs, 'tis very reasonable to believe, they imitate them in their Office; tho' the fineness of the Vegetable Vessels, and slow Motion of the Sap, will not admit a Demonstration of the Sap's Circulation by Ligatures, but we have other Reasons which do sufficiently prove it.

The Young *Potatoe* is nourish'd from the Plant (2), at the end of a White String, by Vessels passing from the Bottom of the Plant; at the same time, when Salt being bound to this String, passes by other Vessels of the same String, contrary to the other, into the Body of the Plant, and may be tasted in the Leaves.

A Quantity of Matter, near equal to that received by the Roots, is constantly carried off, as appears by Dr. *Woodward's* Experiments; and I believe No-body ever doubted, but that it had its chief Exit from the Leaves.

'Tis not likely, that all those curious Vessels, which appear in the Texture of a Leaf, should be design'd for the Recrements and Sap to pass once through them, and thence to fly away together: They might as well pass off, without the use of the Leaves, at the Place where they are inserted into the Plant, if the Leaves were off (3). And

(1) See Mr. *Papin's* Experiments of the Pneumarick Engine; it appears, that Water will pass out at the Leaves, but not from without into them; and that nothing can be found to pass in or out by the Bark, unless the Bark be cut.

(2) It must have its Nourishment from the Mother Plant, because the young *Potatoe* and string, being lay'd on Tiles, could have no Nourishment from the Earth, and yet it will grow large, and have no Taste of Salt in it, that being stopp'd in the Leaves, and kills the Mother *Potatoe*. If the Salt did enter the inmost Vessels, that carry the Nourishment to the young One, that would taste of the Salt, which is apply'd nearer to it, than to the Mother.

(3) Mr. *Hales*, in his Vegetable Staticks, found that a Plant in Summer imbibed and perspired less Water, when its Leaves were pulled off, than when they were on; but this might be partly from the Contraction of the Vessels by the Air, at the Wound where the Leaves were broken off. He also proves, that this quantity of Liquor, that passes through a leafless Plant in Summer (though it be less than what passes through a Plant that has its Leaves on) is vastly greater than what passes through the same Plant in Winter;

And to think, that the Nourishment and Sap of a Plant pass off together, is no less absurd, than to think that the Blood and Chyle pass off together in Perspiration.

Or to what purpose should the Sap be Depurated in the Leaves, if it were not to be return'd back by other Vessels; like *Arteriæ venosæ*, into the Stem or Stalk of a Plant?

If no Circulation, the Sap and all other Juices must pass off together, and then there would be no manner of use of the Vessels of the Leaves as Strainers.

It would be very strange, if what is pure Earth and Water, when it enters the Root, should be Transform'd into such different Juices, by passing once thro' a Plant, as from an Alembick, and in so short a time.

In such case, either it must become perfect Sap in the Root, or else, when it first pass'd thence, it would not be much different from Earth and Water near the Root; and the higher it went, the more different, and the more alter'd it would be; but we find the Sap at the Bottom and Top of a Plant to be the same, and as full of Spirit at the Bottom, which could not be supposed to be made in so short a Percolation, if by Percolation at all.

If Leaves did not perform this necessary work of Succification, the Lives of Plants would not, in all probability, so entirely depend on the use of Leaves, as they appear to do. And this is always found true (tho' too late) by those who kill their *St. Foin*, by suffering it to be indiscreetly fed by Sheep: And to caution them against that Injury, is the Reason of my writing this Chapter.

Leaves being so necessary, Nature has, in all Perennial Plants, provided a Reversionary Stock of them; wherefore Leaves are always form'd, as Dr. *Grew* observes, in Autumn, tho' they are not usually explain'd 'till the following Spring, which then open and increase gradually, in proportion to the Motion of the Sap, and Quantity of *Pabulum* it then receives to be circulated.

Winter; and yet the Plant with the great quantity of Liquor (or Nourishment) in Summer will die; and yet will live with the least in Winter. Hence it appears, that the taking in and passing of never so great a quantity of *Pabulum*, with its Vehicle through a Plant, will not keep it alive, unless it has Leaves in Proportion to that Quantity, as all Plants have that live in Winter. It cannot then be deny'd, that Leaves are absolutely necessary to the Life of a Plant, and if they are, it must be either on account of their conveying something from it; or sending something to it: 'tis plain, it cannot be only by the former, because that can be done without Leaves; they must therefore be necessary by the latter.

And as the Lungs would be of no benefit to an Animal, if the Blood, after it was secern'd and purify'd in them, were not returned to the Body, as well as received from it; so the Secretion made by Leaves would be of no benefit to the Plant, if none of the Sap there secern'd were returned back to it: Neither could the Air, taken in by the Leaves, be of any use to the rest of the Plant, unless it did pass from the Leaves along with the purify'd Sap into the Plant, by some Vessel like the *Aorta*. And, I think, that whoever proves, that the Air passes from the Leaves into the Plant, sufficiently proves the Circulation of the Sap, because if the Sap did move always from the Plant to the Leaves, the Air could not pass against the Stream of it.

It seems, that the chief Arguments, that give Mr. *Hale's* a Suspicion against the Circulation, are taken from the quick Passage of Liquor from the Root through the Plant, and his supposing that Liquor to be Sap; which I think almost as unreasonable as to suppose, the Wine we drink and piss out, to be Blood; The more we drink the quicker the Liquor will generally pass; and the Man, who drank and piss'd out a large Vessel at one Draught, without taking his Mouth from the Tap, 'till 'twas finished, had as quick a Passage for Liquor, as any Plant in all Mr. *Hales's* Experiments, and yet is no proof against the Circulation of the Blood.

Vide Mr. *Hale* of Vegetation, pag. 324, 325. where He says, That 'tis probable Dew, Rain, *&c.* are imbibed by the Leaves, and are the Materials of which the more subtile and refined Principles are form'd. And also, 'That Leaves do in some Measure, the same Office for the Support of Vegetable Life, that 'Lungs do for the Support of the Animal Life; Plants drawing through their Leaves some part of 'their Nourishment from the Air.

If this Nutritive Matter did enter at the excretory Ducts of Leaves, while the Plant was in an imbibing State (as he seems to think) then they must be expelled again at the same Ducts, by the force of the perspiring Stream, as soon as the perspiring State returns; and thus could be of little or no use to the Sap, not going far in.

And is it not more probable, that the Sulphureo-Aerial Particles which, he proves, are so plentifully in Leaves, should invigorate the pure Sap returning into the Plant, than to invigorate only that Recrementitious Sap, that is just making its Exit at the excretory Ducts? How could this invigorate the Plant, or help to nourish it?

These may also, tho' not wholly appearing out of the Bud, be sufficient for the extream small Motion of Life, the Sap of Perennial Plants, which drop their Leaves, have in Winter.

Besides these Autumnal Leaves of Dr. *Grew*'s, there is another Sett of them, form'd in the Spring, which appear and are explain'd about Mid-summer; these save the Lives of the Mulberry-trees, when the first Leaves are taken off for the Food of Silk-worms; but these second Leaves alone would not suffice to purify the Sap, or save the Trees, if the first Leaves were stripp'd off downwards; but as those who gather them, pull and strip them upwards, there always remain some of the Tails, or Foot-stalks, with a little part of the Leaves, behind unpull'd; by help of which remaining parts, the Trees make a shift to live for some time, 'till the new Leaves grow large enough: As Men have been found to have Lived (but not long I suppose) by a small Part of their Lungs, the rest having been wasted, and dry'd away in Consumptive or Asthmatical Cases.

This is certain from all Experience, that no Vegetable whatever can live long without Leaves, but will very soon die, if the Leaves are pull'd off as fast as they appear.

The Reason why natural Grass may seem an Exception to this is, that when 'tis fed by Cattle, there is never any great Quantity of it (especially of Stalks) growing at once, and so less Sap to be purify'd; and has not only a greater proportion of Leaves, but also many Successions of them, still ready to supply the loss of those that are eaten; and many of these Leaves are so small, short and low, that the Cattle cannot come at them to Bite them off close; many more also come out of the very Roots of natural Grass.

CHAP. III. *Of* FOOD *of* PLANTS.

THE chief Art of a Husbandman is to feed Plants to the best Advantage; but, how shall he do that, unless he knows what is their Food? By Food is meant that Matter, which being added and united to the first *Stamina* of Plants, or *Plantulæ*, which were made in little at the Creation, ~~and~~ gives them, or rather is their Increase.

'Tis agreed, that all the following Materials contribute, in some manner, to the Increase of Plants, but 'tis disputed which of them is that very Increase or Food. 1. *Nitre.* 2. *Water.* 3. *Air.* 4. *Fire.* 5. *Earth.*

I will not mention, as a Food, that acid Spirit of the Air, so much talk'd of; since by its eating asunder Iron Bars, it appears too much of the nature of *Aqua Fortis*, to be a welcome Guest alone to the tender Vessels of the Roots of Plants.

Nitre is useful to divide and prepare the Food, and may be said to nourish Vegetables in much the same manner as my Knife nourishes me, by cutting and dividing my Meat: But when *Nitre* is apply'd to the Root of a Plant, it will kill it as certainly as a Knife misapply'd will kill a Man; which proves, that *Nitre* is, in respect of Nourishment, just as much the Food of Plants, as *white Arsenick* is the Food of Rats. And the same may be said of Salts.

Water, from *Van-Helmont*'s Experiment, was by some great Philosophers thought to be it. But these were deceived, in not observing that Water has always in its intervals a charge of Earth, from which no Art can free it. This Hypothesis having been fully confuted by Dr. *Woodward*, No-body has, that I know of, maintain'd it since: And to the Doctor's Arguments I shall add more in the Article of Air.

Air,

Air, because its Spring, &c. is as necessary to the Life of Vegetables, as the Vehicle of Water is; some modern Virtuosi have affirm'd, from the same and worse Arguments, than those of the Water-Philosophers, that Air is the Food of Plants. Mr. *Bradley*, being the chief, if not only Author, who has Publish'd this Phantasie, which at present seems to get ground; 'tis fit he should be answer'd, and this will be easily done, if I can shew, that he has answer'd this his own Opinion, by some or all of his own Arguments.

His first is, that of *Helmont*, and is thus related in Mr. *Bradley*'s general Treatise of *Husbandry and Gardening*, Vol. 1. P. 36. 'Who dry'd Two Hundred 'Pounds of Earth, and Planted a Willow of Five Pounds weight in it, which he 'water'd with Rain, or distill'd Water; and to secure it from any other Earth 'getting in, he cover'd it with a perforated Tin Cover. Five Years after, 'weighing the Tree, with all the Leaves it had born in that Time, he found it 'to weigh One Hundred Sixty-Nine Pounds Three Ounces; but the Earth 'was only diminish'd about Two Ounces in its weight.

On this Experiment Mr. *Bradley* grounds his Airy Hypothesis. But let it be but examined fairly, and see what may be thence inferr'd.

The Tin Cover was to prevent any other Earth from getting in. This must also prevent any Earth from getting out, except what enter'd the Roots, and by them pass'd into the Tree.

A Willow is a very Thirsty Tree, and must have drank in Five Years time several Tuns of Water, which must necessarily carry in its Interstices a great quantity of Earth (probably many times more than the Tree's weight (*), which could not get out, but by the Roots of the Willow.

Therefore the Two Hundred of Earth not being encreased, proves that so much Earth as was poured in with the Water, did enter the Tree.

Whether the Earth did enter to nourish the Tree, or whether only in order to pass through it (by way of Vehicle to the Air) and leave the Air behind for the Augment of the Willow, may appear by examining the Matter of which the Tree did consist.

If the Matter remaining after the Corruption or Putrefaction of the Tree, be Earth, will it not be a Proof, that the Earth remained in it, to nourish and augment it, for it could not leave what it did not first take, nor be augmented by what pass'd through it? According to *Aristotle*'s Doctrine, and Mr. *Bradley*'s too, in Vol. 1. pag. 72. "Putrefaction resolves it again into Earth, its first "Principle.

The Weight of the Tree, even when Green, must consist of Earth and Water. Air could be no part of it, because Air being of no greater specifick Gravity than the incumbent Atmosphere, could not be of any weight in it; therefore was no part of the One Hundred Sixty Nine Pounds Three Ounces.

Nature has directed Animals and Vegetables to seek what is most necessary to them.

At the time when the *Fœtus* has a Necessity of Respiration, 'tis brought forth into the open Air, and then the Lungs are filled with Air. As soon as a Calf, Lamb, *&c.* is able to stand, it applies to the Teat for Food, without any Teaching. In like Manner Mr. *Bradley* remarks, in his Vol. 1. pag. 10. 'That 'almost every Stem and every Root are formed in a bending Manner under 'Ground, and yet all these Stems become strait and upright when they come 'above Ground, and meet the Air; and most Roots run as directly downwards, 'and shun the Air as much as possible.

(*) The Body of an Animal receives a much less Increase in Weight than its Perspirations amount to, as *Sanctorius*'s *Statick-Chair* Demonstrates.

Can any thing more plainly shew the Intent of Nature, than this his Remark does, *viz.* That the Air is most necessary to the Tree above Ground, to purify the Sap by the Leaves, as the Blood of Animals is depurated by their Lungs? And that Roots seek the Earth for their Food, and shun the Air, which would dry up and destroy them?

No one Truth can possibly contradict or interfere with any other Truth; But one Error may contradict and interfere with another Error, *viz.*

Mr. *Bradley* and all Authors, I think, are of Opinion, that Plants of different Natures, are fed by a different sort of Nourishment; from whence they aver, that a Crop of Wheat takes up all that is peculiar to that Grain; Then a Crop of Barley all that is proper to it; next a Crop of Pease, and so on, 'till each has drawn off all those Particles which are proper to it; and then no more of these Grains will grow in that Land, 'till by Fallow, Dung, and Influences of the Heavens, the Earth will be again replenish'd with new Nourishment, to supply the same sorts of Corn over again. This if true (as they all affirm it to be) would prove, that the Air is not the Food of Vegetables. For the Air being in itself so Homogeneous as it is, could never afford such different Matter as they imagine, neither is it probable, that the Air should afford the Wheat, Nourishment more one Year, than the ensuing Year. Or that the same Year it should nourish Barley in one Field, Wheat in another, Pease in a Third, but that if Barley were sown in the Third, Wheat in the First, Pease in the Second, all would fail. Therefore this Hypothesis of Air for Food, interferes with, and contradicts this Doctrine of Necessity of changing Sorts.

I suppose, by Air, they do not mean dry Particles of Earth, and the Effluvia which float in the Air, the Quantity of these is too small to augment Vegetables to that Bulk they arrive at. By that way of speaking they might more truly affirm this of Water, because it must be like to carry a greater quantity of Earth, than Air doth, in proportion to the difference of their different specifick Weight; Water being about 800 times heavier than Air, is likely to have 800 times more of that Terrestrial Matter in it; and we see this is sufficient to maintain some sorts of Vegetables, as Aquaticks. But the Air, by its charge of Effluvia &c. is never able to maintain or nourish any Plant; for as to the Sedums, Aloes, and all others, that are suppos'd to grow suspended in the Air, 'tis a meer fallacy; they seem to grow, but do not; since they constantly grow lighter, and tho' their Vessels may be somewhat distended, by the ferment of their own Juices, which they received in the Earth, yet suspended in Air, they continually diminish in Weight (which is the true augment of a Plant) until they grow to nothing. So that this Instance of Sedums, *&c.* which they pretend to bring for Proof of this their Hypothesis, is alone a full Confutation of it.

Yet if granted, that Air could nourish some Vegetables by the earthy Effluvia, *&c.* which it carry'd with it (*), even that would be against them, not for them.

They might as well believe, that *Martins* and *Swallows* are nourish'd by the Air, because they live on Flies and Gnats, which they catch therein; this being the same Food, which is found in the Stomach of the Chameleon.

If, as they say, the Earth is of little other use to Plants, but to keep them fix'd and steady, there would be little or no difference in the value of Rich and Poor Land, Dung'd or Undung'd; for one would serve to keep Plants fix'd and steady, very near, if not quite as well as the other.

(*) This is meant of dry Earth, by its lightnes (when Pulveriz'd extreamly fine) carried in the Air without Vapour: For the Atmosphere, consisting of all the Elements, has Earth in it in considerable Quantity, mixt with Water; but a very little Earth is so minutely divided, as to fly therein pure from Water, which is its Vehicle there for the most part.

If

If Water or Air was the Food of Plants, I cannot see what necessity there should be of Dung or Tillage.

4. *Fire.* No Plant can live without Heat, tho' different degrees of it be necessary to different sorts of Plants. Some are almost able to keep Company with the *Salamander*, and do live in the hottest exposures of the hot Countries. Others have their abode with Fishes under Water, in cold Climates: for the Sun has his Influence, tho' weaker upon the Earth cover'd with Water, at a considerable Depth, which appears by the Effect the vicissitudes of Winter and Summer have upon Subteraqueous Vegetables.

But, That Fire is the Food of Plants, I don't know any Author has affirm'd, except Mr. *Laurence*, who says, "They are True Fire-Eaters. And even he does not seem to intend, that this Expression of his should be taken literally; Yet, if he had meant it in the plain Sense the words import, perhaps he might have been much nearer the Truth than Mr. *Bradley* with his Air. For if Fire be nothing else but the minutest parts of Terrestrial Matter, put into a violent Motion, then those minute parts out of that Motion are the same Matter as when in it; and these being the true Nourishment of Plants, That and Fire differ in nothing but the Motion.

Fire is a fluid *sui Generis*; but that it pervades all Bodies, and there remains Latent; if excited by Violence is Hot; if at Rest may be Cold, being against the essential property of Fire: That Notion cannot pervade the Skull of a Peasant to make him believe, Fire can ever be cold.

But if we define Fire to be the action of Burning, not the matter which Burns, then Fire will be as different from the Food of Plants, as Air is.

Indeed the true Food of Plants may be also the fuel of Fire, which is so greedy of that Food, as to carry it all away that comes within reach of the Flames; and I know no way, by which the Earth can be divested of its vegetative Particles, but by actual Fire, or the Roots of Plants.

Tho' every heat is said to be a different degree of Fire, yet we may distinguish the degrees by their different effects. Heat warms, but Fire burns; the first helps to cherish, the latter destroys Plants.

5. *Earth.* That which nourishes and augments a Plant, is the true Food of it. Every Plant is Earth, and the growth and true increase of a Plant is the Addition of more Earth.

Nitre (or other Salts) prepares the Earth, Water and Air move it, by conveying and fermenting it in the Juices, and this motion is called Heat.

When this additional Earth is assimilated to the Plant, it becomes an absolute part of it.

Suppose Water, Air, and Heat, could be taken away, would it not remain to be a Plant, tho' a Dead one?

But suppose the Earth of it taken away, what would then become of the Plant? Mr. *Bradley* might look long enough after it, before he found it in the Air amongst his specifick or certain Qualities.

Besides, too much *Nitre* (or other Salts) corrodes a Plant; too much Water drowns it; too much Air dries the Roots of it; too much Heat (or Fire) burns it; but, too much Earth, a Plant never can have, unless it be therein wholly buried; and in that Case it would be equally misapply'd to the Body, as Air or Nitre would be to the Roots.

Too much Earth, or too Fine, can never possibly be given to Roots; for they never receive so much of it, as to surfeit the Plant, unless it be depriv'd of Leaves, which, as Lungs, should purify it.

And Earth is so surely the Food of all Plants, that with the proper share of the other Elements, which each Species of Plants requires, I do not find but that any common Earth will nourish any Plant.

The only Difference of Soil (except the Richness) seems to be the different Heat and Moisture it has; for if those be rightly adjusted, any Soil will nourish any sort of Plant. For let *Thyme* and *Rushes* change places, and both will Die; but let them change their Soil, by removing the Earth wherein the *Thyme* grew, from the dry Hill down into the watry Bottom, and plant *Rushes* therein; and carry the moist Earth, wherein the *Rushes* grew, up to the Hill; and there *Thyme* will grow in the Earth that was taken from the *Rushes*; and so will the *Rushes* grow in the Earth that was taken from the *Thyme*; so that 'tis only more or less Water that makes the same Earth fit either for the growth of *Thyme* or *Rushes*.

So for Heat; our Earth, when it has in the Stove the just degree of Heat, that each sort of Plants requires, will maintain Plants brought from both the *Indies*.

Plants differ as much from one another in the degrees of Heat and Moisture, as a Fish differs from a Salamander.

Indeed *Mistletoe* will not live upon Earth, until it be first alter'd by the Vessels of a Tree, and therein is as nice in Food, as an Animal.

There is no need to have recourse to Transmutation; for whether Air or Water, or both, are Transform'd into Earth or not, the thing is the same, if it be Earth when the Roots take it; and we are convinced that neither Air nor Water alone, as such, will maintain Plants.

These kind of Metamorphoses may properly enough be consider'd in Dissertations purely concerning Matter, and to discover what the Component Particles of Earth are; but not all necessary to be known, in relation to the maintaining of Vegetables.

Chap. IV. *Of* PASTURE *of* PLANTS.

CATTLE feed on Vegetables that grow upon the Earth's external Surface; but Vegetables themselves first receive, from within the Earth, the Nourishment they give to Animals.

The Pasture of Cattle has been known, and understood in all Ages of the World, it being liable to Inspection; but the Pasture of Plants, being out of the Observation of the Senses, is only to be known by Disquisitions of Reason, and has (for ought I can find) past undiscover'd by the Writers of Husbandry (1).

The Ignorance of this seems to be one Principal Cause, that Agriculture, the most necessary of all Arts, has been treated of by Authors more superficially than any other Art whatever. The Food, or Pabulum of Plants being prov'd to be Earth, where, and whence (2) they take that, may properly be called their Pasture.

(1) When Writers of Husbandry, in discoursing of Earth, and Vegetation, come nearest to the Thing, that is, the *Pasture of Plants*, they are lost in the Shadow of it, and wander in a Wilderness of obscure Expressions, such as *Magnetism*, *Virtue*, *Power*, *Specifick Quality*, *Certain Quality*, and the like, wherein there is no manner of Light, for discovering the real Substance; but we are Left by them more in the Dark to find it, than Roots are when they feed on it. And when a Man, no less sagacious than Mr. *Evelyn*, has trac'd it thro' all the *Mazes* of the *Occult Qualities*, and even up to the *Metaphysicks*, he declares he cannot determine whether the Thing he pursues be *Corporeal*, or *Spiritual*.

(2) By the *Pasture* is not meant the *Pabulum* it self; but the *Superficies* from whence the *Pabulum* is taken by Roots.

This

This Pasture I shall endeavour to describe.

'Tis the inner, (or internal) Superficies (3) of the Earth, or which is the same thing, 'tis the Superficies of the Pores, Cavities, or Interstices of the divided parts of the Earth, which are of two Sorts, viz. *Natural* and *Artificial*.

By Nature, the whole Earth, (or Soil) is composed of Parts, and if these had been in every Place absolutely joined, it would have been without Interstices or Pores, and would have had no Internal Superficies, or Pasture for Plants; but since it is not so strictly Dense, (4) there must be Interstices at all those Places where the Parts remain separate and divided.

These Interstices by their Number, and Largeness, determine the Specifick Gravity (or true Quantity) of every Soil, the larger they are, the lighter is the Soil; and the Inner Superficies is commonly the Less.

The Mouths, or Lacteals, being situate, and opening in the Convex Superficies of Roots, they take their Pabulum, being fine Particles of Earth, from the Superficies of the Pores, or Cavities, wherein the Roots are included.

And 'tis certain, that the Earth is not divested, or robb'd of this Pabulum, by any other Means, than by actual Fire, or the Roots of Plants.

For when no Vegetables are suffer'd to grow in a Soil, it will always grow Richer. Plow it, Harrow it, as often as you please, expose it to the Sun in Horse-Pathes all the Summer, and to the Frost of the Winter; let it be cover'd by Water at the Bottom of Ponds, or Ditches, or if you Grind dry Earth to Powder, the longer 'tis kept exposed, or treated by these or any other Method possible, (except actual Burning by Fire) instead of Losing, it will gain the more Fertility.

These Particles, which are the Pabulum of Plants, are so very Minute (5) and Light, as not to be singly attracted to the Earth, if separated from those Parts to which they adhere, (6) or with which they are in contact, (like Dust to a Looking-Glass, turn it upwards, or downwards, it will remain affixt to it) as these Particles do to those Parts, until from thence remov'd by some Agent.

A Plant cannot separate these Particles from the Parts to which they adhere, without the Assistance of Water, which helps to loosen them.

And 'tis also probable, that the Nitre of the Air may be necessary to relax this Superficies, to render the Prolifick Particles capable of being thence dis-

(3) This Pasture of Plants never having been mentioned, or described by any Author that I know of, I am at a loss to find any other Term to describe it by, that may be Synonymous, or æquipollent to it; therefore for want of a better, I call it the inner, or internal Superficies of the Earth, to distinguish it from the outer, or external Superficies, or Surface whereon we tread.

Inner, or internal Superficies, may be thought an absurd Expression, the Adjective expressing something within, and the Substantive seeming to express only what is without it; and indeed, the Sense of the Expression is so; for the Vegetable Pasture is within the Earth, but without (or on the outsides of) the divided parts of the Earth.

And besides Superficies must be joined with the Adjective Inner, (or Internal) when 'tis used to describe the inside of a thing that is hollow, as the Pores and Interstices of the Earth are.

The Superficies, which is the Pasture of Plants, is not a bare mathematical Superficies, for that is only imaginary.

(4) For were the Soil as dense as Glass, the Roots, ~~or~~ Vegetables (such as our Earth produces) would never be able to enter its Pores. of

(5) As to the fineness of the Pabulum of Plants, 'tis not unlikely that Roots may insume no grosser Particles, than those on which the Colours of Bodies depend; but to discover the ~~greatness~~ of those Corpuscles, Sir *Isaac Newton* thinks will require a Microscope, that with sufficient Distinctness can represent Objects five or six hundred times bigger, than at a Foot Distance they appear to the naked Eye. greater

My Microscope indeed is but a very ordinary one, and when I View with it the Liquor newly imbibed by a Fibrous Root of a Mint, it seems more limpid than the clearest common Water, nothing at all appearing in it.

(6) Either Roots must insume the Earth, that is their Pabulum, as they find it in whole Pieces, having entire Superficies of their own, or else such Particles as have not entire Superficies of their own, but want some part of it, which adheres to, or is part of the Superficies of larger Particles, before they are separated by Roots. The former they cannot insume, (unless contained in Water) because they would fly away at the first Pores that were open: Ergo they must insume the latter.

join'd,

join'd; and this Action of the Nitre, seems to be what is call'd, Impregnating the Earth.

Since the grosser Vegetable Particles, when they have pass'd thro' a Plant, together with their moist Vehicle, do fly up into the Air invisibly; 'tis not likely they should, in the Earth, fall off from the Superficies of the Pores, by their own Gravity: And if they did fall off, they might fly away as easily before the enter'd Plants, as they do after they have pass'd thro' them; and then a Soil might become the Poorer, (1) for all the Culture and Stirring we bestow upon it, tho' no Plants were in it, contrary to Experience.

It must be own'd, that Water does ever carry in its Interstices, Particles of Earth, fine enough to enter Roots; because I have seen, that a great Quantity of Water, (in my Experiments) will pass out of Roots set in Rain Water; and 'tis found that Water can never be, by any Art, wholly freed from its earthy Charge; therefore it must have carry'd in some Particles of Earth along with it; but yet, I cannot hence conclude, that the Water did first take these fine Particles from the aforesaid Superficies: I rather think, that they are Exhal'd, together with very small Pieces to which they adhere, and in the Vapour divided by the Aerial Nitre, and when the Vapour is condens'd, they descend with it to replenish the Pasture of Plants; and that these do not enter entire into Roots, neither does any other of the Earthy Charge that any Water contains; Except such fine Particles which have already pass'd thro' the Vegetable Vessels, and been thence Exhal'd.

This Conjecture is the more probable, for that Rain-Water is as nourishing to Plants set therein, as Spring-Water, tho' the Latter have more Earth in it, and tho' Spring-Water have some Particles in it, that will enter Entire into Roots, yet we must consider, that even That Water may have been many times exhal'd into the Air, and may have still retain'd a great Quantity of Vegetable Particles, which it received from Vegetable Exhalations in the Atmosphere, tho' not so great a Quantity, as Rain-Water, that comes immediately thence.

These, I have to do with, are the Particles which Plants have from the Earth, or Soil; but they have also fine Particles of Earth from Water, which may impart some of its finest Charge to the Superficies of Roots, as well as to the Superficies of the Parts of the Earth, (2) which makes the Pasture of Plants.

Yet it seems, that much of the Earth contain'd in the clearest Water, is there in too large Parts to enter a Root; since we see that in a short time the Root's Superficies, will in the purest Water, be cover'd with Earth, which is then form'd into a terrene Pasture, which may nourish Roots; but very few Plants will live long in so thin a Pasture, as any Water affords them. I cannot find one as yet, that has liv'd a Year, without some Earth have been added to it.

And all Aquaticks, that I know, have their Roots in the Earth, tho' cover'd with Water.

The Pores, Cavities, or Interstices of the Earth, being of two Sorts, viz. *Natural* and *Artificial*; the one affords the Natural, the other the Artificial Pasture of Plants.

The natural Pasture alone will suffice, to furnish a Country with Vegetables, for the Maintenance of a few Inhabitants; but if Agriculture were taken out of the World, 'tis much to be fear'd, that those of all populous Countries, especially towards the Confines of the frigid Zones, (for there the Trees often fail

(1) But we see it is always the Richer by being frequently turned and exposed to the Atmosphere: Therefore Plants must take all their Pabulum from a Superficies of Parts of Earth; except what may perhaps be contained in Water fine enough to enter Roots entire with the Water.

(2) If Water does separate, and take any of the meer Pabulum of Plants from the Soil, it gives much more to it.

of

of producing Fruit,) would be oblig'd to turn Anthropophagi, as in many uncultivated Regions they do, very probably for that Reason.

The Artificial Pasture of Plants, is that inner Superficies, which is made from dividing the Soil by Art.

This does, on all Parts of the Globe where used, maintain many more People than the Natural Pasture; (1) and in the colder Climates, I believe, it will not be extravagant to say, Ten times as many: or, that in case Agriculture were a little Improved (as I hope to shew is not difficult to be done) it might maintain Twice as many more yet, or the same Number better.

The Natural Pasture, is not only Less than the Artificial, in an equal Quantity of Earth; but also, that little consisting in the Superficies of Pores, or Cavities, not having a free Communication (2) with one another, are less pervious to the Roots of all Vegetables, and which require a greater Force to break thro' their Partitions; by that means, Roots, especially of weak Plants, are excluded from many of those Cavities, and so lose the Benefit of them.

But the Artificial Pasture consists in Superficies of Cavities, that are pervious to all manner of Roots, and that afford them free Passage and Entertainment in, and thro' all their Recesses. Roots may here extend to the Utmost, without meeting with any Barricadoes in their Way.

The Internal Superficies, which is the natural Pasture of Plants, is like the external Superficies, or Surface of the Earth, whereon is the Pasture of Cattle; in that it cannot be enlarg'd without Addition of more Surface taken from Land adjoining to it, by enlarging its Bounds or Limits.

But the Artificial Pasture of Plants may be enlarg'd, without any Addition of more Land, or Enlarging of Bounds, and this by Division only of the same Earth.

And this Artificial Pasture may be Increas'd in Proportion to the Division of the Parts of Earth, whereof it is the Superficies, which Division may be mathematically Infinite; for an Atom is Nothing; neither is there a more plain Impossibility in Nature, than to reduce Matter to Nothing, by Division or Separation of its Parts.

A Cube of Earth of One Foot, has but Six Foot of Superficies. Divide this Cube into Cubical Inches, and then its Superficies will be increas'd Twelve Times, *viz.* to Seventy-two Superficial Foot. Divide these again in like manner, and proportion, that is, Divide them into Parts that bear the same Proportion to the Inches, as the Inches do to the Foot; and then the same Earth, which had at first no more than Six Superficial Foot, will have Eight Hundred Sixty-four Superficial Foot of ~~Natural~~ Artificial Pasture, and so is the Soil Divisible, and this Pasture Increasible *ad Infinitum*.

Poor Land does not afford an internal Superficies, so well stock'd with these fruitful Particles, as Rich Land doth, but this we may compensate by *Dividing* it more; to the End, that what this Artificial Pasture wants in Quality, may by Division be made up in Quantity.

The common Methods of Dividing the Soil, are these, viz. by *Dung*, by *Tillage*, or by both (3).

(1) The extraordinary Increase of St. Foin, Clover, and Natural Grass, when their Roots reach into pulveriz'd Earth, exceeding the Increase of all those other Plants of the same Species (that stand out of the reach of it) above One Hundred times, shew how vastly the Artificial Pasture of Plants, exceeds the Natural.

(2) None of the Natural Vegetable Pasture is lost, or injured by the Artificial, but on the contrary, 'tis mended, by being mix'd with it, and by having a greater Communication betwixt Pore and Pore.

(3) For *Vis Unita Fortior*.

Chap. V. *Of DUNG.*

ALL sorts of *Dung* and *Compost* contain some Matter, which, when mixt with the Soil, ferments therein; and by such Ferment dissolves, crumbles, and divides the Earth very much; This is the chief, and almost only Use of *Dung*: For as to the pure earthy Part of it, the Quantity is so very small, that, after a perfect Putrefaction, it appears to bear a most inconsiderable Proportion to the Soil it is design'd to Manure; and therefore, in that respect, is next to Nothing.

Its fermenting Quality is chiefly owing to the Salts wherewith it abounds, but a very little of this Salt applied alone to a few Roots of almost any Plant, will (as, in my *Mint* Experiments, it is evident common Salt does) kill it.

This proves, that its use is not to nourish, but to dissolve, *i. e.* Divide the Terrestrial Matter, which affords Nutriment to the Mouths of vegetable Roots.

It is, I suppose, upon the account of the acrimonious fiery Nature of these Salts, that the Florists have banish'd Dung from their Flower-Gardens.

And there is, I'm sure, much more reason to prohibit the use of *Dung* in the Kitchen-Garden, on account of the ill Taste it gives to Esculant Roots, and Plants, especially such Dung as is made in great Towns.

'Tis a Wonder how delicate Palates can dispense with eating their Own, and their Beast's Ordure, but a little more putrify'd and evaporated; together with all sorts of Filth and Nastiness, a Tincture of which those Roots must unavoidably receive, that grow amongst it.

Indeed I do not admire, that learned Palates, accustom'd to the *Goût* of *Silphium*, *Garlick*, *la Chair venee*, and mortify'd Venison, equalling the Stench and Rankness of this sort of City-Muck, should relish and approve of Plants that are fed and fatted by its immediate Contact.

People who are so vulgarly Nice, as to nauseate these modish Dainties, and whose squeamish Stomachs even abhor to receive the Food of Nobles, so little different from that wherewith they regale their richest Gardens, say, that even the very Water, wherein a rich Garden-Cabbage is boil'd, Stinks; but that the Water, wherein a Cabbage from a poor undung'd Field is boil'd, has no manner of unpleasant Savour; and that a *Carrot*, bred in a Dunghill, has none of that sweet relish, which a Field-Carrot affords.

There is a like difference in all Roots, nourish'd with such different Diet.

Dung, not only spoils the fine Flavour of these our Eatables, but inquinates good Liquor. The dung'd Vineyards in *Languedoc*, produce nauseous Wine, from whence there is a Proverb in that Country, That Poor People's Wine is best, because they carry no *Dung* to their Vineyards.

Dung is observ'd to give great Encouragement to the production of Worms, and Carrots in the Garden are much Worm-eaten, when those in the Field are free from Worms.

Dung is the Putrefaction of Earth, after it has been alter'd by vegetable, or animal Vessels.

Vegetable Dung, unless the Vegetable be buried alive in the Soil, makes a much less Ferment in it, and consequently divides it less, than Animal Dung does.

But the Dung of Vegetables is much more wholesom for the use of Edible Roots and Plants, than that of Animals is.

The very Effluvia of Animal Bodies, sent off by Perspiration, are so noxious, as to kill the Animal that emits them, if confin'd to receive them back in great Quan-

Quantity, by breathing in an Air replete with them, which appears from the soon dying of an Animal shut up in a Receiver full of Air. Yet this seems to be most harmless of all sorts of Animal Excrements the Air can be infected with. How noxious then must be the more fetid Steams of Ordure?

If a Catalogue were publish'd of all Instances from Charnel-Houses (or Cemeteries) and of the Pestiferous Effects, which have happen'd from the Putrefaction of dead Bodies, after great Battles, even in the open Air, No-body, I believe, would have a good Opinion of the wholesomness of Animal Dung; for if a great Quantity do so infect the Air, 'tis likely a less may infect it in proportion to that less Quantity.

In great Cities the Air is full of these Effluvia, which in hot Climes often produce the Pestilence; and in cold Climes, People are generally observ'd to live a less time, and less healthfully in Cities, than in the Country; to which difference, 'tis likely, that the eating unwholesom Gardenage may contribute.

This Dung is a fitter Food for venomous Creatures (1) than for Edible Plants, and 'tis, (no doubt) upon account of this, that dung'd Gardens are so much frequented by Toads, which are seldom or never seen, in the open undung'd Fields.

Some have lost their Lives by Toads, being accidentally boil'd in the folds of a Loaf-Cabbage, others Poison'd by their only fixing their Claws on their Arm. A Mountebank, to shew the Energy of his Antidotes, used to eat part of a Toad on his Stage, and cure himself by his Medicines; but I was told by one, that once saw him in his Chamber (after eating too large a Dose of the Poison, or else delaying too long the Application of his Remedy) in such a dismal Condition, that his Life was despair'd of, tho' with much difficulty, and some time, he recover'd.

And notwithstanding what some Authors have said of the Innoxiousness of this Animal, these and other Instances perswade me, that Nature did not give most People such an Aversion to it, in vain. It may not be mortal to every human Body, since I am told of a Man, that has eaten several Toads without any apparent Injury to him; but, I believe, most who shall try the Experiment, will be forc'd to confess, That what is one Man's Meat, is another's Poison.

What can we say then to the Salubrity of those Roots themselves, bred up and fatten'd amongst these Toads and Corruption? The Leaves indeed are only discharging some of the Filth, when we eat them; but the Roots have that unsavory infected Food in their very Mouths, when we take them for our Nourishment.

But tho' *Dung* be, upon these and other accounts, Injurious to the Garden, yet a considerable Quantity of it is so necessary to most Corn-fields, that without it, little good can be done by the old Husbandry.

Dung is not Injurious to the Fields (2), being there in less proportion: And the Produce of Corn is the Grain; when the Leaves have done their utmost to purify the Sap, the most refin'd Part is secern'd to be yet further elaborated by peculiar Organs; then, by the Vessels of the Blossoms, tis become double refin'd, for the Nourishment of the Grain; which is therefore more pure from Dung, and more wholesom, than any other part of the Plant that bears it.

(1) Mr. *Evelyn* says, that Dung is the Nurse of Vermin.

(2) Such Plants as *Cabbages*, *Turnips*, *Carrots*, and *Potatoes*, when they are designed only for Fatting of Cattle, will not be injured by Dung, Tillage, and Hoing altogether, which will make the Crops the greater, and the Cattle will like them never the worse.

And

And common Tillage alone is not sufficient for many sorts of Corn, especially Wheat, which is the King of Grains.

Very few Fields can have the Conveniency of a sufficient supply of Dung, to enable them to produce half the Wheat, those will do near Cities, where they have Plenty of it.

The Crop of 20 Acres, will scarce make Dung sufficient for one Acre, in the common way of Laying it on.

The Action of the Dung's ferment affords a warmth (1) to the Infant-plants, in their most tender State, and the most rigorous Season.

But 'tis hard to know how long the warmth of this Ferment lasteth, by reason of the great difficulty to distinguish the very least degree of Heat, from the very least degree of Cold.

Under the Name of Dung, we may also understand, whatever ferments with the Earth (except Fire) such as green Vegetables cover'd in the Ground, *&c.*

As to the Difference of the Quantity of Artificial Pasture, made by *Dung* without Tillage, and that made by Tillage without *Dung*; the Latter is many times greater, of which I had the following Proof. An Unplow'd Land, wherein a Dunghill had lain for Two or Three Years, and being taken away, was planted with *Turneps*; at the same time a Till'd-Land, contiguous thereto, was drill'd with *Turneps*, and Horse-Ho'd; the other, being Hand-Ho'd, prosper'd best at the first, but at last did not amount to the Fifth part of the Till'd and Horse-Ho'd, in bigness, nor in Crop. The Benefit of the Dung and Hand-Hoe was so Inconsiderable, in Comparison of the Plow and Hoe-Plow; the little Quantity of Artificial Pasture, raised to the other, was only near the Surface, and did not reach Deep enough to maintain the *Turneps*, 'till they arrived at the Fifth part of the growth of those, whose Artificial Pasture reach'd to the Bottom of the Staple of the Land.

A like Proof is, That several Lands of *Turneps*, Drill'd on the Level, at Three Foot Rows, Plow'd, and doubly Dung'd, and also Horse-Ho'd, did not produce near so good a Crop of *Turneps*, as Six Foot Ridges adjoining, Horse-Ho'd, tho' no Dung had been laid thereon many Years. There was no other difference, than that the Three Foot Rows did not admit the Hoe-Plow to raise half the Artificial Pasture, as the Six Foot Rows did. The Dung plow'd into the narrow Intervals, before Drilling, could operate no further, with any great effect, than the Hoe-Plow could turn it up, and help it in its Pulveration.

Dung, without Tillage, can do very little; with some Tillage doth something; with much Tillage pulverizes the Soil in less time, than Tillage alone can do; but the Tillage alone, with more time, can pulverize as well.

I have made many Trials of fine *Dung* on the Rows, and notwithstanding the Benefit of it, I have, for these several Years last past, left it off, finding that a little more Hoing will supply it, at a much less Expence, than that of so small a Quantity of Manure, and of the Hands necessary to lay it on, and of the Carriage.

(1) But though Dung in fermenting may have a little warmth, yet it may sometimes, by letting more Water enter its Hollowness, be in a Frost much colder than undung'd pulveriz'd Earth; for I have seen Wheat-Plants in the Winter, die in the very Spits of Dung, when undung'd drill'd Wheat, adjoining to it, planted at the same time, has flourished all the same Winter; and I could not find any other Reason for this, but the Hollowness of the Dung, and yet it seemed to be well Rotted.

Chap. VI. *Of TILLAGE.*

TILLAGE is breaking and dividing the Ground by Spade, Plow, Hoe, or other Instruments, which divide by a sort of Attrition (or Contusion) as Dung does by Fermentation (1).

By Dung we are limited to the Quantity of it we can procure, which in most Places is too scanty.

But by Tillage, we can enlarge our Field of Subterranean Pasture without Limitation, tho' the external Surface of it be confin'd within narrow Bounds.

Tillage may extend the Earth's internal Superficies, in proportion to the Division of its Parts, and as Division is Infinite, so may that Superficies be.

Every time the Earth is broken by any sort of Tillage, or Division, there must arise some new Superficies of the broken Parts, which never has been open before: For when the Parts of Earth are once united, and incorporated together, 'tis morally Impossible that they, or any of them, should be broken again, only in the same Places; for to do that, such Parts must have again the same Numerical Figures, and Dimensions, they had before such breaking, which even by an infinite Division could never be likely to happen. As the Letters of a Distichon, cut out and mixt, if they should be thrown up never so often, would never be likely to fall into the same Order and Position with one another, so as to recompose the same Distich.

Altho' the internal Superficies may have been drain'd by a preceding Crop, and the next Plowing may move many of the before divided Parts; without new breaking them, yet such as are new broken, have at such places where they are so broken, a new Superficies, which never was, or did exist before; because we cannot reasonably suppose, that any of those Parts can have in all Places (if in any Places) the same Figure and Dimensions Twice.

For as the Matter is divisible *ad Infinitum*, the Places or Lines whereat 'tis so divisible, must be in relation to Number infinite, that is to say, without Number; and must have at every division Superficies of Parts of infinite Variety (2) in figure and dimensions.

And because 'tis morally Impossible, the same Figure and Dimensions should happen Twice, to any one Part, we need not wonder, how the Earth every time of Tilling, should afford a new internal Superficies, (or artificial Pasture) and that the Till'd Soil has in it an inexhaustible Fund, which by a sufficient Division, (being capable of an Infinite one) may be produc'd.

Tillage (as well as Dung) is beneficial to all sorts of Land (3). Light Land being

(1) *Neque enim aliud est Colere quam Resolvere, & Fermentare Terram.* Col.

And since the Artificial Pasture of Plants is made and increas'd by Pulveration, 'tis no matter whether it be by the Ferment of *Dung*, the Attrition of the *Plow*, the Contusion of the *Roller*, or by any other Instrument, or means whatsoever, except by Fire, which carries away all the Cement of that which is Burnt.

(2) Their Variety is such, that 'tis next to Impossible, any Two Pieces, or Clods, in a Thousand Acres of Till'd Ground, should have the same Figure, and equal Dimensions, or that any Piece should exactly Tally with any other, Except with that from whence it was broken off.

(3) 'Tis of late fully prov'd, by the Experience of many Farmers, that Two or Three Additional Plowings, will supply the place of Dung, even in the Old Husbandry, if they be perform'd at proper Seasons; and the Hiring Price of Three Plowings, after Land has been Thrice plow'd before, is but Twelve Shillings, whereas a Dunging will cost Three Pounds. This was accidentally discover'd in my Neighbourhood, by the Practice of a Poor Farmer, who, when he had prepar'd his Land for Barley, and could not procure Seed to sow it, plow'd it on 'till Wheat Seed-time, and (by means of such Additional Plowing) without Dung, had so good a Crop of Wheat, that it was Judg'd to be worth more than the Inheritance of the Land it grew on.

being naturally Hollow, has larger Pores, which are the cause of its Lightness. This, when it is by any means sufficiently divided, the Parts being brought nearer together, becomes for a Time, Bulk for Bulk, heavier; *i. e.* The same Quantity will be contain'd in less Room; and so is made to partake of the Nature and Benefits of strong Land, *viz.* to keep out too much Heat and Cold, and the like.

But strong Land, being naturally less Porous, is made for a time lighter, (as well as richer) by a good Division; the separation of its Parts makes it more Porous, and causes it to take up more room, than it does in its natural State, and then it partakes of all the Benefits of lighter Land.

When strong Land is Plow'd, and not sufficiently, so that the Parts remain gross, 'tis said to be rough, and it has not the Benefit of Tillage; because most of the Artificial Pores (or Interstices) are too large, and then it partakes of the Inconveniencies of the hollow Land untill'd.

For when the light Land is Plow'd but once, that is not sufficient to diminish its natural Hollowness (or Pores) and for want of more Tillage, the parts into which 'tis Divided, by that once (or perhaps twice) Plowing, remain too large, and consequently the artificial Pores are large also, and in that respect, are like the ill Till'd strong Land.

Light Land having naturally less Internal Superficies, seems to require the more Tillage, (1) or Dung to enrich it; as when the poor, hollow, thin Downs have their upper Part, (which is the best) Burnt, whereby all (except a *Caput Mortuum*) is carried away, yet the Salts of this spread upon that barren Part of the Staple, which is unburnt, divide it into so very minute Particles, that their Pasture will nourish Two or Three good Crops of Corn: But then the Plow, even with a considerable Quantity of Dung, is never able afterwards to make a Division equal to what those Salts have done, and therefore such burnt Land remains barren.

Artificial Pores cannot be too small; because Roots may the more easily enter the Soil that has them, quite contrary to natural Pores; for these may be, and generally are, too small, and too hard, for the entrance of all weak Roots, and for the free entrance of strong Roots.

Insufficient Tillage leaves strong Land with its natural Pores too small, and its artificial Ones too large. It leaves light Land, with its natural and artificial Pores both too large.

The same Effect follows when they prepare Land for Turneps, since they are come in Fashion, and Sow them several times upon several Plowings, the Fly as often taking them off; They have from such Extraordinary Tillage, a good Crop of Wheat, instead of the lost Turneps, without the help of Dung; Hence double Plowing is now become frequent in this Country.

The Reason why Land is enrich'd, by lying long Unplow'd is, that so very few Vegetables are carried off it, very little being produc'd, the Exhaustion is less than what is added by the Atmosphere, Cattle, &c. But when 'tis Plow'd, a vastly greater Quantity of Vegetables is produc'd and carried off, more than by the Old Husbandry is return'd to it.

(1) As for Puffy Land, which naturally swells up, instead of subsiding, tho' its Hollowness is much abated by Tillage, yet is thought litle better than Barren Land, and unprofitable for Corn. But what we usually call Light-Land, is only comparatively so, in respect of that which is heavier, and stronger. And this sort of Light-Land becomes much lighter by being ill Till'd; the unbroken Pieces of Turf underneath Undissolved, forming large Cavities, encrease its Hollowness, and consequently its Lightness: I have often known this sort of Land despis'd by its Owners, who fear'd to give it due Tillage, which they thought would make it so Light, that the Wind would blow it away; but whenever such has been thoroughly Till'd, it never fail'd to become much stronger than before; and considering that 'tis Till'd with less expence, than very strong Land, it is, for several sorts of Corn, found to be more profitable, than Land of greater Strength, and Richness, that is more difficult to be Till'd.

And I am apt to think, that this sort of Light-Land, acquires more Cement by having its *External* Superficies often Changed, and exposed to the Dews, and other Benefits of the Atmosphere, as well as by the Increase of (its *Internal* Superficies, which is the Surfaces of all the Divided Parts of Earth or) the Pasture of Plants; the one being augmented by the other; *i. e.* That into the more Parts the Earth is broken, the more Cement will it attain, from the Sulphur, which is brought by the Dews.

Pores

Pores that are too small in hard Ground, will not easily permit Roots to enter them.

Pores that are too large in Any sort of Land, can be of little other use to Roots, but only to give them passage to other Cavities, more proper for them; and if in any place they lie open to the Air, they are dry'd up and spoil'd, before they reach them.

For fibrous Roots (which alone maintain the Plant, the other Roots serve for receiving the Chyle from them, and convey it to the Stem) can take in no Nourishment from any Cavity, unless they come into Contact with, and press against all the Superficies of that Cavity, which includes them; for it dispenses the Food to their Lacteals, by such pressure only. But a fibrous Root is not so press'd by the Superficies of a Cavity, whose Diameter is greater than that of the Root.

The Surfaces of great Clods form Declivities on every side of them, and large Cavities; which are as Sinks to convey, what Rain and Dew bring, too quickly downwards to below the Plow'd part.

The first and second Plowings, with common Plows, scarce deserve the Name of Tillage, they rather serve to prepare the Land for Tillage.

The Third, Fourth, and every subsequent Plowing, may be of more Benefit and less Expence, than any of the preceding ones.

But the Last Plowings will be more advantageously perform'd by way of Hoing, as in the following Chapters will appear.

For the finer Land is made by Tillage, the richer will it become, and the more Plants it will maintain.

It has been often observ'd, that when Part of a Ground has been better Till'd than the rest, and the whole Ground constantly manag'd alike, afterwards for Six, or Seven Years successively, this Part that was but once better Till'd, always produc'd a better Crop than the rest, and the difference remain'd very visible every Harvest.

One part being once made finer, the Dews did more enrich it; for they penetrate within, and beyond the Superficies, whereto the Roots are able to enter; The fine Parts of the Earth are Impregnate throughout their whole Substance, with some of the Riches carried in by the Dews, and there reposited; until, by new Tillage, the Insides of those fine Parts become Superficies; and as the Corn drains them, they are again supply'd as before: But the rough large Parts cannot have that Benefit, the Dews not penetrating to their Centers, they remain Poorer. *Minus habentibus minus datur, & vice versa.*

I think nothing can be said more strongly, to confirm the Truth of this, than what is related by the Authors, quoted by Mr. *Evelyn*, (1) To this Effect, *viz.*

'Take of the most barren Earth you can find, Pulverize it well, and expose 'it abroad for a Year incessantly agitated (2), it will become so fertile, as to 'receive an Exotic Plant, from the furthest Indies; and to cause all Vegetables 'to prosper in the most exalted degree, and to bear their Fruit as kindly with 'us, as in their natural Climates.

This artificial Dust (3), He says, will entertain Plants which refuse Dung, and other violent Applications, and that it has a more nutritive Power than any

(1) In Pag. 17, 18, and 19. of his *Phil. Discourse of Earth.* (2) *i. e.* stirr'd often.

(3) Tho' it may be Impossible for the Plow to reduce the whole Staple into so fine Powder, yet the more Internal Superficies it makes, the more Dust will be made by the Atmosphere in Proportion; and great Clods perhaps are of no use to Plants, but by that Dust they let fall, being thence extricated by the Insensible ferment of the Nitrous Air; and the Surfaces of this artificial Dust must receive such Operations from the Air, before the utmost Fertility be obtain'd.

Arti-

Artificial Dungs, or Compost whatsoever: And further, that by this Toil of Pulverizing "tis found, that Soil may be so strangely alter'd from its former "Nature, as to render the harsh and most uncivil Clay (1), obsequious to the "Husbandman, and to bring forth Roots and Plants, which otherwise require "the lightest and hollowest Mould (2).

'Tis to be suppos'd, that the Indian Plants had their due Degrees of Heat and Moisture given them, and I should not choose to bestow this Toil upon the poorest of Earth, in a Field or Garden, tho' that be the most sure, wherein to make the Experiment.

I never myself try'd this way of Pounding or Grinding, because Impracticable in the Fields.

But I have had the Experience of a Multitude of Instances, which confirm it so far, that I am in no doubt, that any Soil (3) (be it Rich or Poor) can ever be made too fine by Tillage.

For 'tis without dispute, that one Cubical Foot of this minute Powder, may have more Internal Superficies, than a Thousand Cubical Foot of the same, or any other Earth Till'd in the common manner; and, I believe, no Two arable Earths in the World, do exceed one another in their natural Richness Twenty Times; That is, One Cubical Foot of the Richest, is not able to produce an equal quantity of Vegetables, *cæteris paribus*, to Twenty Cubical Foot of the Poorest; therefore 'tis not strange, that the poorest, when by Pulverizing it, has obtain'd one Hundred times the Internal Superficies of the Rich untill'd Land, it should exceed it in Fertility. Or, if a Foot of the poorest was made to have Twenty times the Superficies of a Foot of such rich Land, the poorest might produce an equal Quantity of Vegetables with the rich (4). Besides there is another extraordinary Advantage, when a Soil has a large Internal Superficies in a very little Compass; for then the Roots of Plants in it are better supply'd with Nourishment, being nearer to them on all sides within reach, than it can be when the Soil is less fine, as in common Tillage; and the Roots in the one must extend much further than in the other, to reach an equal quantity of Nourishment: They must range and fill perhaps above Twenty times more space to collect the same quantity of Food.

But in this fine Soil, the most weak and tender Roots have free Passage to the utmost of their extent, and have also an easy, due and equal Pressure every where, as in Water.

Hard Ground makes a too great Resistance, as Air makes a too little Resistance, to the superficies of Roots.

Farmers, just when they have brought their Land into a Condition, fit to be further Till'd, to much greater Advantage, leave off, supposing the Soil to be Fine enough, when, with the help of Harrows, they can cover the Seed; and

(1) But I take harsh uncivil Clay to be the least Profitable of any to keep in Tillage.

(2) To this Dust, *Namque hoc imitamur arando* ought to be apply'd, and not to *Pavire solum*, which itself needs Tillage, as well as strong Land; But it seems the Ancients did not observe the difference between natural Pores (or Hollowness) and artificial ones, tho' it is very great, as is shewn in Chap. of *Pasture of Plants*, 'tis easier indeed to imitate this Artificial Dust in *hollow*, than in *strong* Land.

(3) Land that is too Hollow and Light having no Cement to Joyn its parts together, tho' in Nature they are capable of Infinite Division, yet in Practice, the Plow, cannot divide them to any purpose, unless they were first Joyn'd, but glides through without breaking them; being more like to the primary Particles of Water against the Plow, which are broken by no force, than to Earth; it may be moved, but not broken by Tillage, and therefore ought not to be reputed Arable; nor does it indeed deserve the Name of Land, but as the desart Sands of *Lybia*, to Distinguish it from Sea.

(4) And very Poor Land, well pulveriz'd, will produce better Corn than very Rich will do, without Manure or Tillage. The Experiment may be made by paring off the Turf, and setting Corn in the whole Ground that is very Rich; and that will shew how much the Natural Pasture of the Rich is Inferior to the Artificial Pasture of the Poor Land.

afterwards

afterwards with a Roller they break the Clods; to the end, that if a Crop succeed, they may be able to mow it, without being hinder'd by those Clods. By what I could ever find, this Instrument, call'd a Roller, is seldom Beneficial to good Husbands: It rather Untills the Land, and Anticipates the subsiding of the Ground, which in strong Land happens too soon of it self (1).

But more to blame are they, who neglect to give their Land due Plowing, trusting to the Harrow to make it fine; and when they have thrown in their Seed, go over it Twenty Times with the Harrows (2), 'till the Horses have trodden it almost as hard as a High-way, which in moist Weather spoils the Crop: But on the Contrary, the very Horses, when the Earth is moist, ought all to tread in the Furrows only, as in Plowing with a Hoe-Plow they always do, when they use it instead of a common Plow.

(1) This Injury the Roller does, is only when 'tis used to press down the Earth, after the Seed is sown; and is the greater, if Land be moist; but the Rolling of it in dry Weather, when 'tis to be immediately Plow'd up again, is the most speedy Way to Pulverize the Soil, and the Harrow is then very useful in pulling up the Clods, to the End that the Roller may the better come at them to Crush them.

(2) *Nam veteres Romani dixerunt male subactum Agrum qui satis frugibus Occandus sit.*
Sed ut compluribus iterationibus sic resolvatur Vervactum in pulverem, ut nullam vel exiguam desideret occationem cum seminaverimus. Col. Lib. 2. Cap. 4.

Chap. VII. *Of HOING.*

HOING is the breaking or dividing the Soil by Tillage, whilst the Corn or other Plants are growing thereon.

It differs from common Tillage (which is always perform'd before the Corn or Plants are sown or planted) in the times of performing it; 'tis much more beneficial, and 'tis perform'd by different Instruments.

Land that is before sowing Tilled never so much (tho' the more 'tis Till'd the more it will produce) will have some Weeds, and they will come in along with the Crop for a share of the Benefit of the Tillage, greater or less, according to their Number, and what Species they are of.

But what is most to be regarded is, That as soon as the Plowman has done his Work of Plowing and Harrowing, the Soil begins to undo it, inclining towards, and endeavouring to regain its natural specifick Gravity; the broken parts by little and little coalesce, unite, and lose some of their Surfaces, many of the Pores or Interstices close up during the Seed's Incubation, and hatching in the Ground; and, as the Plants grow up, they require an Increase of Food, proportionable to their increasing Bulk; but on the contrary, instead thereof, that internal Superficies, which is their Artificial Pasture, gradually decreases.

The Earth is so unjust to Plants, her own Off-spring, as to shut up her Stores in proportion to their Wants; that is, to give them less Nourishment when they have need of more; therefore Man, for whose use they are chiefly design'd, ought to bring in his reasonable Aid for their relief, and force open her Magazines with the Hoe, which will thence procure them at all times Provisions in abundance, and also free them from Intruders; I mean, their spurious Kindred, the Weeds, that robb'd them of their too scanty Allowance.

There's no doubt, but that one Third part of the Nourishment raised by Dung and Tillage, given to Plants or Corn at many proper Seasons, and apportion'd to the different times of their Exigencies, will be of more Benefit to a Crop, than the Whole apply'd as it commonly is, only at the time of Sowing. This old Method is almost as unreasonable as if treble the full Stock of Leaves, necessary

ceſſary to maintain Silk-Worms 'till they had finiſhed their Spinning, ſhould be given them before they are Hatched, and no more afterwards.

Nature, by what ſhe does in the animal Oeconomy, ſeems to point out to us ſomething like Hoing; for when Teeth as Plows have till'd that Soil, or Maſs, (which is Earth alter'd) and when the Saliva and Ferment of the Stomach have ſerved for Stercoration to it; then as a thing of greateſt Benefit, the Bile and Pancreas are employed to further, divide, and open, and as it were to Hoe it, at the very time when 'tis ready to be exhauſted by the greateſt Numbers of lacteal Mouths ſituate in the Inteſtines.

A Plant is almoſt as imperfectly nouriſhed by Tillage without Hoing, as an animal Body would be without Gall and Pancreatick Juice. For Roots paſs along the Soil, as the Soil or Maſs paſſes along the Guts.

Next to Hoing, and ſomething like it, is Tranſplanting, but much inferiour; both becauſe it requires a ſo much greater Number of Hands, that by no contrivance can it ever become general, nor does it ſucceed if often repeated; but Hoing will maintain any Plant in the greateſt Vigour 'tis capable of, even unto the utmoſt Period of its Age. Beſides there is danger in removing a whole Plant, and loſs of Time before the Plant can take Root again, all the former Roots being broken off at the Ends in taking up (for 'tis impoſſible to do it without) and ſo muſt wait until by the Strength and Virtue of its own Sap (which by a continual Perſpiration is daily enfeebled) new Roots are form'd, which unleſs the Earth continue moiſt, are ſo long in forming, that they not only find a more difficult Reception into the cloſing Pores, but many times the Plant languiſhes and dies of an Atrophy, being ſtarv'd in the midſt of Plenty; but whilſt this is thus decaying, the Hoed Plant obtains a more flouriſhing State than ever, without removing from the ſame Soil that produc'd it.

'Tis obſerv'd that ſome Plants are the worſe for Tranſplanting (1). *Funochio* removed, is never ſo good and tender as that which is not; it receives ſuch a Check in Tranſplanting in its Infancy, which, like the Rickets, leaves Knots that indurate the parts of the *Fennel*, and ſpoil it from being a Dainty.

Hoing, has moſt of the Benefits without any Inconveniencies of Tranſplanting; becauſe it removes the Roots by little and little, and at different times; ſome of the Roots remaining undiſturb'd, always ſupply the moved Roots with Moiſture, and the whole Plant with Nouriſhment ſufficient to keep it from fainting, until the moved Roots can enjoy the Benefit of their new Paſture, which is very ſoon.

Another extraordinary Benefit of the *New* Hoing (2) Husbandry is, that it keeps Plants moiſt in dry Weather, and this upon a double Account.

First, As they are better Nouriſhed by Hoing, they require leſs Moiſture, as appears by Doctor *Woodward*'s Experiment, that thoſe Plants which receive the greateſt Increaſe, having moſt Terreſtrial Nouriſhment, carry off the leaſt Water in proportion to their Augment; ſo Barley or Oats, being ſown on a part of a Ground very well divided by Dung and Tillage, will come up and grow

(1) As moſt long Tap-Rooted Plants are; for I have often try'd the Tranſplanting of Plants, of *St. Foin* and *Luſerne*, and could never find, that any ever came near to the Perfection that thoſe will do which are not removed, being equally ſingle.

Tap-Rooted Graſſes and Turneps, are always injur'd by Tranſplanting; their long Root once broken off never arrives at the Depth it would have arriv'd unbroken; as for this reaſon they Cut off the Tap-Root of an Apple-tree, to prevent its running downward, by which it would have too much Moiſture.

(2) Hoing may be divided into Deep (which is our Horſe-Hoing) and Shallow, which is the Engliſh Hand-Hoing; and alſo the Shallow Horſe-Hoing, uſed in ſome Places betwixt Rows, where the Intervals are very narrow, as Sixteen or Eighteen Inches; this is but an Imitation of the Hand-Hoe, or a *Succedaneum* to it, and can neither ſupply the Uſe of Dung, nor of Fallow, and may be properly called Scratch-Hoing.

vigoroufly

vigoroufly without Rain, when the ſame Grains, ſown at the ſame time, on the other part, not thus enriched, will ſcarce come up, or if they do, will not thrive 'till Rain comes.

Secondly, The Hoe, I mean the Horſe-Hoe (the other goes not Deep enough) procures Moiſture to the Roots from the Dews, which fall moſt in dry Weather; and thoſe Dews (by what Mr. *Thomas Henſhaw* has obſerv'd) ſeem to be the richeſt Preſent the Atmoſphere gives to the Earth; 'Having, 'when putrify'd in a Veſſel, a black Sediment like Mud at the Bottom. This ſeems to cauſe the darkiſh Colour to the upper Part of the Ground. And the Sulphur, which is found in the Sediment of the Dew, may be the chief Ingredient of the Cement of the Earth; Sulphur being very glutinous, as Nitre is diſſolvent; Dew has both theſe.

Theſe enter in Proportion to the fineneſs and freſhneſs of the Soil, and to the Quantity that is ſo made fine and freſh by the Hoe. How this comes to paſs, and the reaſon of it, is ſhewn in the Chapter of *Tillage*.

To demonſtrate that Dews moiſten the Land when fine, dig a Hole in the hard dry Ground, in the drieſt Weather, as Deep as the Plow ought to reach: Beat the Earth very fine, and fill the Hole therewith; and, after a few Night's Dews, you'll find this fine Earth become moiſt at the Bottom, and the hard Ground all round will continue dry.

Till a Field in Lands, make one Land very Fine, by frequent deep Plowings, and let another be Rough, by inſufficient Tillage alternately; then Plow the whole Field croſs-ways in the drieſt Weather, which has continued long, and you will perceive, by the Colour of the Earth, that every Fine Land will be turn'd up Moiſt; but every Rough Land will be Dry as Powder, from Top to Bottom (1).

Altho' hard Ground, when thoroughly ſoak'd with Rain, will continue Wet longer than fine till'd Land adjoining to it; yet this Water ſerves rather to chill, than nouriſh the Plants ſtanding therein, and to keep out the other Benefits of the Atmoſphere, leaving the Ground ſtill harder when 'tis thence exhaled; and being at laſt once become Dry, it can admit no more Moiſture, unleſs from a long continued Deluge of Rain (which ſeldom falls 'till Winter) which is not the Seaſon for Vegetation.

As fine Hoed Ground is not ſo long ſoaked by Rain, ſo the Dews never ſuffer it to become perfectly Dry; this appears by the Plants, which flouriſh and grow Fat in this, whilſt thoſe in the hard Ground are Starved. Except ſuch of them, which ſtand near enough to the Hoed (2) Earth, for the Roots to borrow Moiſture and Nouriſhment from it.

(1) Theſe Experiments will ſhew, how it is in our own Power to make *Solſtitia* become in ſome meaſure *Humida*, inſtead of Wiſhing them ſo; And alſo proves, The *Virgilian* Theory in this Verſe, *viz. His Sterilem exiguus ne deſerat Humor Arenam*, to be (as almoſt all the firſt *Georgic* is) directly Contrary to Truth.

(2) As when Wheat is Drill'd late in very Poor Land, ſo that in the Spring the young Plants look all very Yellow; let your Hoe-Plow, making a crooked Line, like an Indenture, on one ſide of a Streight Row of this poor Wheat in the Spring, turn a Furrow from it, and in a ſhort time you will ſee all thoſe yellow Plants, that are contiguous to this Furrow, Change their yellow Colour to a deep Green; whilſt thoſe Plants of the ſame Row, which ſtand fartheſt off from this Indented Furrow, change not their Colour till afterwards; and all the Plants change or retain their Colour ſooner or later gradually, as they ſtand nearer to, or farther from it; and the other Rows, which have no Furrow near them, continue their Yellow, after all this Row is become Green and flouriſhing. But this Experiment is beſt to be made in poor Sandy Ground, where the Mould is Friable, elſe perhaps the different Colour may not appear until the Furrow be turn'd back to the Row, having lain ſome time to be ſomewhat pulveriz'd (or impregnated) by the Weather, &c.

I never remember to have ſeen a Plant poor, that was contiguous to a Well-Hoed Interval, unleſs over-power'd by a too great Multitude of other Plants; and the ſame Exception muſt be made, if it were a Plant that required more or leſs Heat or Moiſture than the Soil, or Climate afforded.

And

And I have been informed by some Persons, that they have often made the like Observations; that, in the driest of Weather, good Hoing (1) procures Moisture to Roots; tho' the Ignorant, and Incurious fancy, it lets in the Drought, and therefore are afraid to Hoe their Plants at such times, when, unless they Water them, they are spoil'd for want of it.

There is yet One more Benefit Hoing gives to Plants, which by no Art can possibly be given to Animals: For all that can be done in feeding an Animal is, what has been here already said of Hoing; that is, to give it sufficient Food, Meat and Drink, at the times it has occasion for them; if you give an Animal any more, 'tis to no manner of purpose, unless you could give it more Mouths, which is impossible; but in Hoing a Plant, the additional Nourishment thereby given, enables it to send out innumerable additional Fibres and Roots, as in the Glass with a *Mint* in it, mark'd *F*, is seen; which fully demonstrates, that a Plant increaseth its Mouths, in some proportion, to the increase of Food given to it: So that Hoing, by the new Pasture it raises, furnishes both Food and Mouths to Plants; and 'tis for want of Hoing, that so few are brought to their full Growth and Perfection (2).

In what manner the Sarrition of the Ancients was performed in their Corn, is not very clear; this seems to have been their Method, *viz.* When the Plants were some time come up, they harrowed the Ground, and pull'd out the Weeds by Hand; the Process of this appears in *Columella*, where he directs the planting of *Medica* to be, but a sort of Harrowing or Raking amongst the young Plants, that the Weeds might come out the more easily: *Ligneis Rastris statim jacta semina obruantur. Post sationem Ligneis Rastris sarriendus & identidem runcandus est Ager, ne alterius generis herba invalidam Medicam perimat.*

They Harrowed and Hoed *Rastris*; so that their *Occatio* and *Sarritio* were performed with much the same sort of Instrument, and differed chiefly in the Time; the first was at Seed-time, to cover the Seed, or level the Ground; the other was to move the Ground after the Plants were up.

One sort of their Sarrition was, *Segetes permota terra debere adobrui, ut fruticare possint.* Another sort was thus: *In locis autem frigidis sarriri nec adobrui, sed plana Sarritione terram permoveri.*

For the better understanding of these two sorts of Sarrition we must consider, that the Ancients sowed their Corn under Furrow; that is, when they had harrowed the Ground, to break the Clods, and make it level, they sowed the Seed, and then plowed it in; this left the Ground very uneven, and the Corn came up (as we see it does here in the same case) mostly in the lowest Places betwixt the Furrows, which always lay higher; this appears by *Virgil's Cum Sulcos æquant Sata:* Now when they used *Plana Sarritio* they harrowed Lengthways of the Furrows, which being somewhat harden'd, there could be little Earth thrown down thence upon the young Corn.

(1) But to Hoe with advantage against dry Weather, the Ground must have been well Tilled or Hoed before; that the Hoe may go deep, else the Dews, that fall in the Night, will be exhal'd back in the Heat of the Day.

(2) A Ground was Drill'd with Ray-grass and Barley, in Rows at Five Inches distance from each other; it produced a pretty good Crop of Ray-grass the second Year, as is usual; there was adjoining to it a Ground of Turneps, that were in Rows, with Wide Intervals Horse-Ho'd; they stood for Seed; and amongst them there was in room of a Turnep, a Single Plant of Ray-grass, which being Hoed as the Turneps were, had (in every one's Opinion that saw it) acquired a Bulk at least equal to a Thousand Plants of the same Species in the other Ground; tho' that vast Plant had no other advantage above the other, except its Singleness, and the Deep Hoing.

I have seen a Chickweed, by the same means, as much encreas'd beyond its common Size; and a Plant of Mustard-Seed, whose Collateral Branches, were much bigger than ever I saw a whole Plant of that sort; it was higher than I could reach its Top, and indeed more like a Tree than an Herb; many other sorts of Plants have I seen thus encreas'd beyond what I had ever observ'd before, but none so much as those.

But

But the other sort of Sarrition, whereby the Corn is said *Adobrui*, to be cover'd; seems to be perform'd by Harrowing cross the Furrows, which must needs throw down much Earth from the Furrows, which necessarily fell upon the Corn.

How this did contribute to make the Corn *fruticare*, is another Question: I am in no doubt to say, it was not from covering any part of it (for I see That has a contrary Effect) but from moving much Ground, which gave a new Pasture to the Roots; this appears by the Observation of the extraordinary Frutication of Wheat Ho'd without being cover'd; and by the Injury it receives by not being uncover'd when any Earth falls on the Rows.

The same ~~Author~~ saith, *Faba & cætera Legumina cum quatuor Digitis à terra extiterint rectè sarrientur, excepto tamen Lupino, cujus Semini contraria est Sarritio; quoniam unam Radicem habet, quæ sive Ferro succisa seu vulnerata est, totus Frutex emoritur.*

If they had Ho'd it only betwixt Rows, there had been no danger of killing the *Lupine*, which is a Plant most proper for Hoing; what he says of the *Lupines* having no need of Sarrition, because it is able of it self to kill Weeds, shews the Ancients were ignorant of the chief Use of Hoing, *viz.* to raise new Nourishment by dividing the Earth, and making a new internal Superficies in it.

Sarrition scratched and broke so small a Part of the Earth's Surface, amongst the Corn and Weeds without distinction, or favouring one any more than the other, that it was a Dispute, whether the Good it did, in facilitating the Runcation (or Hand-weeding) was greater, than the Injury it did by bruising and tearing the Corn: And many of the Ancients chose rather to content themselves with the Use of Runcation only, and totally to omit all Sarrition of their Corn.

But Hoing is an Action very different from that of Sarrition, and is every way beneficial, no way injurious to Corn, tho' destructive to Weeds; therefore some modern Authors shew a profound Ignorance, in mistaking in translating Sarritio for Hoing; they give an Idea very different from the true one: For the Ancients truly Ho'd their Vineyards, but not their Corn; neither did they plant their Corn in Rows, without which they could not give it the Vineyard-Hoing: Their Sarculation was used but amongst small Quantities of sown Corn, and is yet in use for Flax; for I have seen the Sarculum (which is a sort of a very narrow Hoe) used amongst the Plants of Flax standing irregularly, but this Operation is too tedious and too chargable, to be apply'd to great Quantities of irregular Corn.

If they Ho'd their Crops sown at random, one would think they should have made mad Work of it; since they were not at the Pains to plant in Rows, and hoe betwixt them with their Bidens; being the Instrument with which they tilled many of their Vineyards, and enters as deep as the Plow, and is much better than the English Hoe, which indeed seems, at the first Invention of it, to be designed rather to scrape Chimneys, than to Till the Ground.

The highest and lowest Vineyards are Ho'd by the Plow, first the high Vineyards, where the Vines grow (almost like Ivy) upon great Trees, such as Elms, Maples, Cherry-trees, *&c.* these are constantly kept in Tillage, and produce good Crops of Corn, besides what the Trees do yield; and also these great and constant Products of the Vines, are owing to this sort of Hoe-Tillage; because neither in Meadow or Pasture Grounds can Vines be made to prosper; tho' the Land be much richer, and yet have a less quantity of Grass taken off it, than the Arable has Corn carried from that.

The Vines of low Vineyards, Ho'd by the Plow, have their Heads just above the Ground, standing all in a most regular Order, and are constantly plowed in the

proper

proper Season: these have no other Assistance, but by Hoing; because their Heads and Roots are so near together, that Dung would spoil the Taste of the Wine they produce, in hot Countries.

All Vineyards must be Ho'd one way or other (1), or else they will produce nothing of Value; but Corn-fields without Hoing do produce something, tho' nothing in comparison to what they would do with it.

Mr. *Evelyn* says, that when the Soil, wherein Fruit-trees are planted, is constantly kept in Tillage, they grow up to be an Orchard in half the Time, they would do, if the Soil were not Till'd; and this keeping an Orchard-Soil in Arable, is Horse-hoing it.

In some Places in *Berkshire* they have used, for a long Time, to Hand-hoe most sorts of Corn, with very great Success; and I may say this, that I my self never knew, or heard, that ever any Crop of Corn was properly so Ho'd, but what very well answer'd the Expence, even of this Hand-work; but be this never so Profitable, there are not a Number of Hands to use it in great Quantities; which possibly was one Reason the Ancients were not able to introduce it into their Corn-fields to any purpose; tho' they should not have been ignorant of the Effect of it, from what they saw it do in their Vineyards and Gardens.

In the next Place I shall give some general Directions, which by Experience I have found necessary to be known, in order to the Practice of this Hoing-Husbandry.

I. *Concerning the Depth to Plant at.*
II. *The Quantity of Seed to Plant:*
III. *And the Distance of Rows.*

I. 'Tis necessary to know how Deep we may plant our Seed, without danger of Burying it; for so 'tis said to be, when laid at a Depth below what 'tis able to come up at.

Different Sorts of Seeds come up at different Depths; some at Six Inches, or more; some at not more than Half an Inch: The way to know for certain the Depth any sort will come up at is, to make Gages in this manner: Saw off 12 Sticks of about 3 Inches Diameter; Bore a Hole in the End of each Stick, and drive into it a taper Peg, let the first Peg be Half an Inch long, the next an Inch, and so on; every Peg to be Half an Inch longer than the former, 'till the last Peg be Six Inches long; then in that sort of Ground where you intend to plant, make a Row of Twenty Holes with the Half-Inch Gage; put therein Twenty good Seeds; cover them up, and then stick the Gage at the End of that Row, then do the like with all the other Eleven Gages; this will determine the Depth, at which the most Seeds will come up.

When the Depth is known, wherein the Seed is sure to come up, we may easily discover whether the Seed be Good or not, by observing how many will fail: For in some Sorts of Seeds, the Goodness cannot be known by the Eye; and there has been often great Loss by bad Seed, as well as by Burying good Seed; both which Misfortunes might be prevented by this little Trouble; besides 'tis not convenient to plant some Sorts of Seed at the utmost Depth they will come up at; for it may be so Deep, as that the Wet may Rot or Chill the first Root, as in Wheat in moist Land.

The Nature of the Land, the Manner how it is laid, either Flat or in Ridges; and the Season of Planting, with the Experience of the Planter, acquired by such Trials, must determine the proper Depths for different Sorts of Seeds.

(1) Vines, that cannot be Ho'd by the Plow, are Ho'd by the Bidens.

II. The

II. The proper *Quantity* of Seed to be Drill'd on an Acre, is much less than must be sown in the common way, not because Hoing will not maintain as many Plants as the other; for on the contrary, Experience shews it will always, *caeteris paribus*, maintain more; but the Difference is upon many other Accounts: As that 'tis Impossible to sow it so even by Hand, as the Drill will do; for let the Hand spread it never so exactly (which is difficult to do some Seeds, especially in windy Weather) yet the Unevenness of the Ground will alter the Situation of the Seed; the greatest Part rebounding into the Holes, and lowest Places, or else the Harrows in Covering, draw it down thither; and tho' these low Places may have Ten times too much, the high Places may have little, or none of it; this inequality lessens in effect the quantity of the Seed; because Fifty Seeds in room of One, will not produce so much as One will do, and where they are too thick, they cannot be well nourished, their Roots not spreading to near their natural Extent, for want of Hoing to open the Earth. Some Seed is buried, (by which is meant the laying them so deep, that they are never able to come up, as *Columella* cautions, *Ut absque ulla resurrectionis spe sepeliantur*) Some lies naked above the Ground; which, with more uncovered by the first Rain, feeds the Birds and Vermin.

Farmers know not the Depth that is enough to bury their Seed, neither do they make much Difference in the Quantity they sow on a rough, or a fine Acre; tho' the same that is too little for the one, is too much for the other; 'tis all meer Chance-work, and they put their whole Trust in good Ground, and much Dung, to cover their Errors.

The greatest Quantity of Seed I ever heard of to be usually sown, is in *Wiltshire*, where I am informed by the Owners themselves, that on some sorts of Land, they sow Eight Bushels of Barley to an Acre; so that if it produce Four Quarters to an Acre, there is but Four Grains for One that is sown, and is a very poor Increase, tho' a good Crop; this is on Land plowed once, and then double Dung'd, the Seed only harrow'd into the stale and hard Ground, 'tis like not Two Bushels of the Eight enters it to grow; and I have heard, that in a dry Summer, an Acre of this scarce produces Four Bushels at Harvest.

But in Drilling, Seed lies all at the same just Depth, none Deeper, nor Shallower than the rest; here's no danger of the Accidents of burying, or being uncover'd, and therefore no Allowance must be made for them; but Allowance must be made for other Accidents, where the sort of Seed is liable to them; such as, Grub, Fly, Worm, Frost, *&c.*

Next, when a Man unexperienc'd in this Method, has proved the Goodness of his Seed, and Depth to plant it at, he ought to calculate what Number of Seeds a Bushel, or other Measure, or Weight contains: For one Bushel, or one Pound of small Seed, may contain double the Number of Seeds, of a Bushel, or a Pound of large Seed of the same Species.

This Calculation is made by weighing an Ounce, and counting the Number of Seeds therein; then weighing a Bushel of it, and multiplying the Number of Seeds of the Ounce, by the Number of Ounces of the Bushel's weight; the Product will shew the Number of Seeds of a Bushel near enough: then by the Rule of Three, apportion them to the square Feet of an Acre; or else it may be done, by dividing the Seeds of the Bushel, by the square Feet of an Acre; the Quotient will give the Number of Seeds for every Foot: also consider how near you intend to plant the Rows, and whether Single, Double, Treble, or Quadruple; for the more Rows, the more Seed will be required (1).

(1) The Narrow Spaces (suppose Seven Inches) betwixt Double, Treble, or Quadruple Rows; the Double having One, the Treble Two, and the Quadruple Three of them, are called *Partitions*.
The wide Space (suppose of near Five Foot) betwixt any Two of these Double, Treble, or Quadruple Rows, is call'd an *Interval*.

 Ex-

Examine what is the Produce of one middle-siz'd Plant of the Annual, but the Produce of the best and largest of the perennial Sort; because That by Hoing will be brought to its utmost perfection; Proportion the Seed of both to the reasonable Product, and when 'tis worth while, adjust the Plants to their competent Number with the Hand-hoe, after they are up; and plant Perennials generally in single Rows; lastly, plant some Rows of the Annual thicker than others, which will soon give you Experience (better than any other Rule) to know the exact Quantity of Seed to Drill.

III. The *Distances* of the Rows is one of the most material Points, wherein we shall find many apparent Objections against the Truth; which, tho full Experience be the most infallible Proof of it, yet the World is by false Notions so prejudiced against wide Spaces between Rows, that unless these common (and I wish I could say, only vulgar) Objections be first answer'd, perhaps no-body will venture so far out of the old Road, as is necessary to gain the Experience, without it be such as have seen it.

I formerly was at much Pains and some Charge in Improving my Drills, for planting the Rows at very near Distances, and had brought them to such Perfection, that One Horse would draw a Drill with Eleven Shares, making the Rows at Three Inches and Half distance from one another; and at the same time Sow in them, Three very different Sorts of Seeds, which did not mix, and these too, at different Depths; as the Barley Rows were Seven Inches asunder, the Barley lay Four Inches deep; a little more than Three Inches above that, in the same Channels, was Clover; betwixt every Two of these Rows was a Row of St. Foin, cover'd Half an Inch deep.

I had a good Crop of Barley the first Year; the next Year, Two Crops of Broad-Clover, where that was sown; and where Hop-Clover was sown, a mix'd Crop of That and St. Foin, and every Year afterwards a Crop of St. Foin; but I am since, by Experience, so fully convinced of the Folly of these, or any other such mix'd Crops, and more especially of Narrow Spaces; that I have demolish'd these Instruments (in their full Perfection) as a vain Curiosity, the Drift and Use of them being contrary to the true Principles and Practice of Horse-Hoing.

Altho' I am satisfied, that every One, who shall have seen as much of it as I have, will be of my Mind in this Matter; yet I am aware, that what I am going to advance, will seem shocking to them, before they have made Trials.

I lay it down as a Rule (to my self) That every Row of Vegetables, to be Horse-Ho'd, ought to have an empty Space or Interval of Thirty Inches on one Side of it (1) at least, and of near Five Foot in all Sorts of Corn.

In Hand-Hoing there is always less Seed, fewer Plants, and a greater Crop, *cæteris paribus*, than in the common Sowing; yet there, the Rows must be much nearer together, than in Horse-Hoing; because as the Hand moves many times less Earth than the Horse, the Roots would be sent out in like Proportion; and if the Spaces or Intervals, where the Hand-Hoe only scratches a little of the upper Surface of them, should be wide, they would be so hard and stale

(1) *Note.* We call it one Row, tho' it be a Double, Treble, or Quadruple Row; because when they Unite in the Spring, they seem to be all single, even the Quadruple then is but as one single Row.

Observe, that as wide Intervals are necessary for perfect Horse-Hoing, so the largest Vegetables have generally the greatest Benefit by them; tho' small Plants may have considerable Benefit from much narrower Intervals than five Foot.

The Intervals may be somewhat narrower for constant annual Crops of Barley, than of Wheat; because Barley does not shut out the Hoe-Plow, so soon, nor require so much Room for Hoing, nor so much Earth in the Intervals, it being a lesser Plant, and growing but about a Third part of the time on the Ground; but he that Drills Barley, must resolve to Reap it, and bind it up in Sheaves; for if he Mows it, or does not bind it, a great part will be lost among the Earth in the Intervals: Yet I think, that Six-Foot Ridges for Barley in Quadruple Rows, are more profitable; especially on a Thin Soil.

under-

underneath, that the Roots of perennial Plants, would be long in running thro' them; and the Roots of many annual Plants would never be able to do it.

An Instance which shews something of the Difference between Hand-Hoing and Deep Hoing is, That a certain Poor Man is observ'd to have his Cabbages vastly bigger than any Body's else, tho' their Ground be richer, and better dung'd; his Neighbours were amaz'd at it, 'till the Secret at length came out, and was only this, as other People Ho'd their Cabbages with a Hand-Hoe, he instead thereof Dug his with a Spade: And nothing can more nearly equal (1) the Use of the Horse-Hoe than the Spade does.

And when Plants have never so much Pabulum near them, their fibrous Roots cannot reach it all, before the Earth naturally excludes them from it; for to reach it all, they must fill all the Pores (2), which is impossible: So far otherwise it is, that we shall find it probable, that they can only reach the least part of it, unless the Roots could remove themselves from Place to Place, to leave such Pores as they had exhausted, and apply themselves to such as were unexhausted; but they not being endow'd with Parts necessary for local Motion (as Animals are) the Hoe-Plow supplies their want of Feet; and both conveys them to their Food, and their Food to them, as well as provides it for them; for, by Transplanting the Roots, it gives them Change of the Pasture, which it encreases by the very act of Changing them from one Situation to another, if the Intervals be wide enough for this Hoing Operation to be properly perform'd.

The Objections most likely to prepossess People's Minds, and prevent their making Trials of this Husbandry, are these:

First, They will be apt to think, that these wide, naked Spaces, not being *Cover'd* by the Plants, will not be sufficient to make a good Crop.

For Answer, We must consider, that tho' Corn standing irregular and *sparsim*, may seem to cover the Ground better than when it stands regular in Rows, this Appearance (3) is a meer *Deceptio visus*; for Stalks are never so thick on any Part of the Ground, as where many come out of one Plant, or as when they stand in a Row; and a Ho'd Plant of Corn will have Twenty or Thirty Stalks (4), in the same quantity of Ground where an Unho'd Plant, being equally single, will have only Two or Three Stalks. These Tillered Ho'd Stalks, if they were planted *sparsim* all over the Interval, it might seem well cover'd, and perhaps thicker than the sown Crop commonly is; so that tho' these Ho'd Rows, seem to contain a less Crop, they may contain in reality a greater Crop than the sown, that seems to exceed it; and 'tis only the different placing, that makes one seem greater, and the other less than it really is; and this is only when both Crops are Young.

The next Objection is, That the Space or Interval not being *planted*, much of the Benefit of that Ground will be lost; and therefore the Crop must be less than if it were Planted all over.

I Answer, It might be so, if not Horse-ho'd; but if well Horse-ho'd, the Roots can run through the Intervals; and having more Nourishment, make a greater Crop.

(1) The Ho-Plow exceeds the Spade in this respect, that it removes more of the Roots, and cuts off fewer, which is an Advantage when we Till near to the Bodies of Plants that are grown large.

(2) The Roots of a *Mint*, set a whole Summer in a Glass, kept constantly replenished with Water, will in Appearance, fill the whole Cavity of the Glass; but by compressing the Roots, or by observing how much Water the Glass will hold when the Roots are in it, we are convinc'd, that they do not fill a Fourth part of its Cavity; tho' they are not stopp'd by Water, as they are by Earth.

(3) For the Eye to make a Comparison betwixt a sown Crop, and such a Ho'd Crop, it ought when 'tis half grown to look on the Ho'd Crop a-cross the Rows, because in the other it does so, in effect, which way soever it looks; but whatever appearance the Ho'd Crop of Vegetables (of as large a Species as Wheat) makes when Young, it surely, if well managed, appears more beautiful at Harvest than a Sown Crop. (4) I have counted Fifty large Ears on one single Ho'd Plant of Barley.

The too great Number of Plants, plac'd all over the Ground in common sowing, have whilst it is open, an Opportunity of *masting*, when they are very young, that Stock of Provision, for want of which, the greatest Part of them are afterwards starv'd; for their irregular standing prevents their being relieved with fresh Supplies from the Hoe: Hence it is, that the old Method exhausting the Earth to no purpose, produces a less Crop; and yet leaves less Pabulum behind for a succeeding one, contrary to the Hoing-Husbandry, wherein Plants are manag'd in all respects by a quite different Oeconomy.

In a large Ground of Wheat it was prov'd, that the widest Ho'd Intervals brought the greatest Crop of all: Dung without Hoing, did not equal Hoing without Dung. And what was most remarkable, amongst Twelve Differences of wider and narrower Spaces, more and less Ho'd, dung'd and undung'd, the Hand-sow'd was considerably the worst of all; tho' all the Winter, and Beginning of the Spring, That made infinitely the most promising Appearance; but at Harvest yielded but about one fifth Part of Wheat of that which was most Ho'd; there was some of the most Hoed, which yielded Eighteen Ounces of clean Wheat in a Yard in Length of a Double Row, the Intervals being Thirty-six Inches, and the Partition Six Inches (1).

A Third Objection like the Two former is, That so small a Part of the Ground, as that whereon the Row stands, cannot contain Plants or Stalks sufficient for a full Crop.

This some Authors endeavour to support by Arguments taken from the perpendicular Growth of Vegetables, and the room they require to stand on; both which I having answer'd elsewhere, I need not say much of them here; only I may add, that if Plants could be brought to as great Perfection, and so to stand as thick all over the Land, as they do in the Ho'd Rows, there might be produc'd at once many of the greatest Crops of Corn that ever grew.

But since Plants thrive, and make their Produce in proportion to the Nourishment they have within the Ground, not to the room they have to stand upon it, one very narrow Row may contain more Plants than a wide Interval can nourish, and bring to their full Perfection, by all the Art that can be used; and 'tis Impossible a Crop should be lost for want of room to stand above the Ground, tho' it were less than a Tenth Part of the Surface (2).

'Tis no great Wonder, that Astronomers take Notice of those Parts of Plants alone, which exist within that Element where they are accustomed to make their Stellary Observations; or treat of them only as they regard their Zenith, not enquiring what is done by the Roots, within the Earth's dark Recesses, or how much of her Dimensions is necessary to employ them in their Office.

But I should have thought Mr. *Laurence* a better Philosopher, than to be so much

(1) The same Harvest, a Yard in Length of a Double Row of Barley, having Six Inches Partition, produc'd Eight Hundred and Eighty Ears in a Garden; but the Grains happen'd to be eaten by Poultry before 'twas ripe, so that their Produce of Grains could not be known: One like Yard of a Ho'd Row of Wheat in an undung'd Field, produc'd Four Hundred Ears of Lammas-Wheat.

(2) Mr. *Houghton* Calculates, That a Crop of Wheat of Thirty Quarters to an Acre, each Ear has Two Inches and a Half of Surface; by which 'tis evident, that there wou'd be Room for many such prodigious Crops to stand on.

And a Quick-Hedge, standing between two Arable Grounds, one Foot Broad at Bottom, and Eighteen Foot in Length, will, at Fourteen Years Growth, produce more of the same sort of Wood, than Eighteen Foot Square of a Coppice will produce in the same time, the Soil of both being of equal Goodness.

This seems to be the same Case with our Ho'd Rows; the Coppice if it were to be Cut in the first Years, would yield perhaps Ten times as much Wood, as the Hedge; but many of the Shoots of the Coppice constantly Die every Year, for want of sufficient Nourishment, until the Coppice is fit to be Cut; and then its Product is much less than that of the Hedge, whose Pasture has not been overstock'd to such a Degree as the Coppice-Pasture has been; and therefore brings its Crop of Wood to greater Perfection than the Coppice-Wood, which has Eighteen times the Surface of Ground to stand on; The Hedge has the Benefit of Hoing, as oft as the Land on either side of it is Till'd; but the Coppice, like the sown Corn, wants that Benefit.

much Imposed on by that Quibling Fallacy of Mr. *Bradley's*, about the Perpendicular Growth of Plants, as to call it a Demonstration: "And as to Hills, tho' "they measure near Twice as much as the plain Ground they stand upon; yet "the Produce of the one can be no more than the Produce of the other: See Mr. *Laurence's New System*, Page 63.

'Tis very likely, that Reverend Gentleman may have had Opportunities (unless he Preaches no better than he Plows) of seeing all his Parishioners stand Perpendicularly in his Church, as in a Row; but his Tythe might put him in Mind, that many Acres of Space, or Surface more than the Church's Area, are necessary for their Nourishment; without which, Hunger would soon bring them from their Perpendicular Posture, to an Horizontal one; and he might perform his last Office for them all at once.

And just so it is with Plants, tho' these Gentlemen by their Arguments about them seem to think otherwise; else they would not attempt to Calculate the Quantity of the Earth's Surface necessary for them, by the manner of their Growth; it being nothing to the Purpose, whether it be Perpendicular or not: but 'tis true, that Perpendicular Plants have most Benefit by Hoing; because by that Posture they admit the Hoe to come the oftner amongst them.

In wide Intervals there is another Advantage of Hoing, I mean Horse-Hoing; (the other being more like scratching and scraping than Hoing) there is room for many Hoings (1), which must not come very near the Bodies of some annual Plants, except whilst they are young; but in narrow Intervals this cannot be avoided at every Hoing: 'tis true, that in the last Hoings, even in the Middle of a large Interval, many of the Roots may be broke off by the Hoe-Plow, at some considerable distance from the Bodies; but yet this is no Damage, for they send out a greater Number of Roots than before; as in the *Mint*, mark'd *F*, in Chap. I. appears.

In wide Intervals, those Roots are broken off only where they are small, for tho' they are capable of running out to more than the length of the external parts of a Plant; yet 'tis not necessary they should always do so; if they can have sufficient Food nearer to the Bodies (2) of the Plants.

And these new, young, multiply'd Roots are fuller of Lacteal Mouths than the older ones, which makes it no Wonder, that Plants should thrive faster by having some of their Roots broken off by the Hoe; for as Roots do not enter every Pore of the Earth; but miss great part of the Pasture, which is left unexhausted, so when new Roots strike out from the broken parts of the old, they meet with that Pasture, which their Predecessors miss'd, besides that new Pasture which the Hoe raises for them; and those Roots which the Hoe pulls out without breaking and covers again, are turn'd into a fresh Pasture; some broken and some unbroken, all together invigorate the Plants.

Besides, the Plants of sown Corn being Treble in Number, to those of the Drill'd, and of equal Strength and Bulk, whilst they are very young, must exhaust the Earth whilst it is open, Thrice as much as the Drill'd Plants do; and before the sown Plants grow large, the Pores of the Earth are shut against them,

(1) Many Hoings; But if it should be asked how many, we may take *Columella's* Rule in Hoing the Vines, *viz. Numerus autem vertendi Soli (bidentibus) definiendus non est, cum quanto crebrior sit, plus prodesse fossionem conveniat. Sed impensarum ratio modum postulat.* Lib. 4. Cap. 5.

Neither is it altogether the Number of Hoings that Determine the Degrees of Pulveration; For, Once well done is Twice done, and the oftner the better; if the Expence be not excessive.

Poor Land, be it never so Light, should have the most Hoings; because Plants receiving but very little Nourishment from the natural Pasture of such Land, require the more Artificial Pasture to subsist on.

(2) All the Mould is never so near to the Bodies of Plants, as 'tis when the Row stands on a high Six-foot Ridge, when the middle of the Interval is left bare of Earth, at the last Hoing; for then all the Mould may be but about a Foot, or a Foot and half distant from the Body of each Plant of a Treble Row.

and

and against the Benefit of the Atmosphere; but for the Drill'd, the Hoe gives constant admission to that Benefit; and if the Hoe procures them (by dividing the Earth) Four times the Pasture of the sown, during their Lives, and the Roots devour but one half of that, then tho' the ho'd Crop should be Double to the sown, yet it might *leave* Twice as much Pabulum for a succeeding Crop. 'Tis impossible to bring these Calculations to Mathematical Rules, but this is certain in Practice, That a sown Crop, succeeding a large Undung'd ho'd Crop, is much better than a sown Crop, that succeeds a small Dung'd sown Crop. And I have the Experience of poor, worn out Heath-Ground, that having produc'd Four successive good Ho'd Crops of *Potatoes* (the last still best) is become tolerable good Ground.

In a very poor Field were planted *Potatoes*, and in the very worst part of it, several Lands had them in Squares a Yard asunder; these were plowed Four ways at different times; some other Lands adjoining to them, of the very same Ground, were very well Dung'd and Till'd; but the *Potatoes* came irregularly, in some places thicker, and in others thinner; these were not Ho'd, and yet at first coming up, looked blacker and stronger than those in Squares not Dung'd, neither that Year, or ever, that I know of; yet these Lands brought a good Crop of the largest *Potatoes*, and very few small ones amongst them; but in the dung'd Lands, for want of Hoing, the *Potatoes* were not worth the taking up; which proves, that in those Plants that are planted so as to leave Spaces wide enough for Repetitions of Hoing, that Instrument can raise more Nourishment to them, than a good Coat of Dung with common Tillage.

Another thing I have more particularly observ'd, *viz.* That the more successive Crops are planted in wide Intervals and often Ho'd, the better the Ground does maintain them; the last Crop is still the best, without Dung or changing the Sort of Plant; and this is so visible, in parts of the same Field, where some part having a First, some other part a Second, the rest a Third Crop growing all together at the same time; which seems to prove, that as the Earth is made by this Operation to dispense, or distribute her Wealth to Plants, in proportion to the Increase of her Inner Superficies (which is the Pasture of Plants) so the Atmosphere, by the riches in Rain and Dews, does annually reimburse her in proportion to the same Superficies, with an Overplus for Interest: But if that Superficies be not increased to a competent Degree, and by frequent Repetitions of Hoing, kept increasing (which never happens in common Husbandry) this Advantage is lost; and, without often repeated Stercoration, every Year's Crop grows worse; and it has been made evident by Trials, which admit of no dispute, That Hoing, without Dung or Fallow, can make such Plants as stand in wide Intervals, more vigorous in the same Ground, than both common Dunging and Fallowing can do without Hoing.

This sort of Hoing has in truth every Year the Effect of a Summer-fallow; tho' it Yearly produce a good Crop.

This is one Reason of the different Effects, Plants have upon the Soil; some are said to Enrich it, others to Burn it (*i. e.*) to impoverish it; But I think it may be observed, that all those Plants, which are usually Ho'd, are reckoned among the Enrichers; and tho' it be certain, that some Species of Plants are, by the Heat of their Constitution, greater Devourers than those of another Species of equal Bulk; yet there is Reason to believe, that were the most Cormorant Plant of them all, to be commonly Ho'd, it would gain the Reputation of an Enricher or Improver of the Soil; Except it should be such, as might occasion trouble, by filling it full of its shatter'd Seeds, which might do the Injury

jury of Weeds to the next Crop; and, except such Plants, which have a vast Bulk to be maintained a long time, as Turnep-seed (1).

The wider the Intervals are, the more Earth may be divided, for the Row takes up the same Room with a wide, or a narrow Interval; and therefore with the wide, the Unho'd part bears a less Proportion to the Ho'd part than in the narrow.

And 'tis to no purpose to Hoe, where there is not Earth to be Ho'd, or Room to Hoe it in.

There are many ways of Hoing with the Hoe-Plow; but there is not Room to turn Two *deep, clean* Furrows in an Interval that is Narrower than Four Foot Eight Inches; for if it want much of this Bredth, One at least, of these Furrows, will reach, and fall upon the next Row, which will be very injurious to the Plants; except of Grown *St. Foin*, and such other Plants, that can bear to have the Earth pull'd off them by Harrows.

Thus much of *Hoing* in general may suffice; and different Sorts of Plants requiring different Management; that may more properly be described in the Chapter, where particular Vegetables are treated of.

It may not be amiss to add, that all Sorts of Land are not equally proper for Hoing; I take it, that Dry Friable Soil is the best. Intractable wet Clays, and such Hills that are too Steep, for Cattle to Draw a Plow up and down them, are the most improper (2).

That 'tis not so Beneficial to Hoe in Common-Fields, is not in respect of the Soil; but to the *Virgilian* Principles, which have bound the Owners to unreasonable Customs of Changing the Species of Corn, and make it necessary to Fallow, every Second, Third or Fourth Year at farthest.

(1) *Turneps* Run to Seed, not till the second Summer.
(2) For by Hoing cross the Hill, the Furrow turn'd against the Declivity cannot be thrown up near enough to the Row above it; and the Furrow that is turn'd downwards will Bury the Row below it.

Chap. VIII. *Of WEEDS.*

PLANTS, that come up in any Land, of a different Kind from the sown or planted Crop, are Weeds.

That there are in Nature any such things as *inutiles Herbæ*, the Botanists deny; and justly too, according to their meaning.

But the Farmer, who expects to make Profit of his Land, from what he sows or plants in it, finds not only *Herbæ inutiles*, but also *noxiæ*, unprofitable and hurtful Weeds; which come like *Muscæ*, or uninvited Guests, that always hurt, and often spoil his Crop, by devouring what he has, by his Labour in Dunging and Tilling, provided for it's Sustenance.

All Weeds as such are pernicious, but some much more than others; some do more Injury, and are more easily destroy'd; some do less Injury, and are harder to kill; others there are, which have both these bad Qualities. The hardest to kill are such as will grow and propagate by their Seed, and also by every piece of their Roots, as Couch-Grass, Coltsfoot, Melilot, Fern, and such like. Some are hurtful only by robbing Legitimate (or Sown) Plants of their Nourishment, as all Weeds do; others both lessen a Legitimate Crop by robbing it, and also spoil that Crop, which escapes their Rapine, when they infect it with their nauseous Scent and Relish, as Melilot, Wild-Garlick, *&c.*

Weeds ſtarve the ſown Plants, by robbing them of their Proviſion of Food (1); not of their Room (as ſome Authors vainly imagine) which will appear by the following Experiment.

Let Three Beds of the ſame Soil; equal, and equally prepared, be ſown with the ſame Sort of Corn. Let the Firſt of theſe Beds be kept clean from Weeds: In the Second, Let a Quantity of Weeds grow along with the Corn; and in the Third, Stick up a Quantity of dead Sticks, greater in Bulk than the Weeds.

It will be found, that the Produce of the Corn in the Firſt, will not exceed that of the Third Bed; but in the Second, where the Weeds are, the Corn will be diminiſh'd in Proportion to the Quantity of Weeds amongſt it.

The Sticks, having done no Injury to the Corn, ſhew there was Room enough in the Bed for Company to Lodge; would they forbear to Eat; or elſe (like Travellers in *Spain*) bring their Proviſion with them to their Inn, or (which would be the ſame thing) if Weeds could find there, ſome Diſh ſo diſagreeable to the Palate of the Corn, and agreeable to their own, that they might Feed on it without Robbing, and then they would be as Innocent as the Sticks, which take up the ſame Room with the Weeds.

The Quantity of Nouriſhment Weeds rob the Corn of, is not in proportion only to their Number and Bulk, but to the Degrees of Heat in their Conſtitution, as appears by the Inſtance of Charlock and Turneps, mention'd in the Chapter *Of Change of Species*.

'Tis needleſs to go about to compute the Value of the Damage Weeds do, ſince all Experienc'd Husbandmen know it to be very great, and would Unanimouſly agree to extirpate their whole Race as entirely, as in *England* they have done the Wolves, tho' much more Innocent, and leſs Rapacious than Weeds (2).

But alas! they find it Impoſſible to be done, or even to be hoped for, by the common Husbandry; and the Reaſons I take to be theſe.

The Seeds of moſt ſorts of Weeds are ſo hardy, as to lie ſound and uncorrupt for many Years (3), or perhaps Ages, in the Earth; and are not kill'd until they begin to grow or ſprout, which very few of them do, unleſs the Land be Plow'd, and then enough of them will ripen amongſt the ſown Crop, to propagate and continue their Species, by ſhedding their Off-ſpring in the Ground (for 'tis obſerv'd they are generally ripe before the Corn) and the Seeds of theſe do the ſame in the next ſown Crop; and thus perpetuate their ſavage, wicked (4) Brood, from Generation to Generation.

Beſides, their Seeds never all come up in one Year, unleſs the Land be very often Plow'd; for they muſt have their exact Depth, and Degrees of Moiſture and Heat to make them grow; and as ſuch as have not theſe, will lie in the Ground, and retain their vegetative Virtue for Ages; and the common uſual Plowings, not being ſufficient to make them all, or the greateſt part grow, almoſt every Crop that ripens increaſes the Stock of Seed, until it make a conſiderable Part of the Staple of ſuch Land as is ſown without good Tillage and Fallowing.

The beſt Defence againſt theſe Enemies, which the Farmer has hitherto

(1) A Tree of any Sort will ſpoil Corn all round it, in a Large Circle; half an Acre of Turneps has been ſpoil'd by one: Hereby 'tis plain, That Trees rob as Weeds; becauſe 'tis not by their Shadow, there being as much Damage done by them on the South-ſide, where their Shadow never comes, as on their North-ſide; nor can it be by their Dropping, for 'tis the ſame on the ſide where a Tree has no Boughs to drop over the Plants, when they are alſo at a very great diſtance from all Parts of the Tree, except its Roots.

(2) If we conſider the Crops they utterly deſtroy; and thoſe they extreamly diminiſh; and that very few Crops eſcape without receiving Injury from them; it may be a Queſtion, Whether the Miſchief Weeds do to our Corn, is not as great as the Value of the Rent of all the Arable Lands in *England*.

(3) The Seeds of *Lethean Poppy* (call'd *Red-Weed*) have lain dormant 24 Years (the Land being, during that time, in *St. Foin*) and then at firſt Plowing they came up very thick; this I have ſeen, and ſo will many other ſorts of Weeds, when the Ground has lain Untill'd, for an Age.

(4) The French call them, *les Herbes Sauvages, & les mechantes Herbes*.

found,

found, is to endeavour their Deſtruction, by a good Summer-Fallow; this indeed, if the Weather be propitious, does make Havock of them; but ſtill ſome will eſcape one Year's Proſecution.

Either by being ſometimes ſituate ſo high, that the Sun's Heat dries them, ſometimes lying ſo deep it cannot reach them; either way their Germination, which would have proved their Death, is prevented.

Another Faculty ſecures abundance of them, and that is, their being able to endure the Heat and Moiſture of one Year without growing; as Wild-Oats, and innumerable other ſorts of Weeds will do; for gather theſe when ripe, ſow them in the richeſt Bed, Water them, and do all that is poſſible to make them Grow the firſt Year, it will be vain Labour; they will reſiſt all Enticements 'till the Second; that is, if you gather them in Autumn, you cannot force them to grow until the next Spring come Twelve-month; and many of them will remain dormant even to the next Year after that, and ſome of them longer.

By this means, One Year's Summer-Fallow can have no Effect upon them, but to prepare the Soil for their more vigorous Growth, and plentiful Encreaſe the next Year after, and very rarely will the Farmer, Fallow his Land two Years ſucceſſively: and often the Dung, which is made of the Straw of ſown Corn, being full of the Seeds of Weeds, when ſpread on the Fallows, encumbers the Soil with another Stock of Weeds, as ample as that, the Fallowing has deſtroy'd; and tho' perhaps many of theſe may not Grow the next Year, they will be ſure to come up afterwards.

The other old Remedy is what often proves worſe than the Diſeaſe; that is, what they call Weeding among ſown Corn; for if by the Hook or Hand they Cut ſome Sorts (as Thiſtles) while they are young, they will ſprout up again, like *Hydras*, with more Heads than before; and if they are cut when full grown, after they have done almoſt their utmoſt in Robbing the Crop, 'tis like ſhutting the Stable Door after the Steed is ſtol'n.

Hand-Weeders often do more Harm to the Corn with their Feet, than they do Good by Cutting or Pulling out the Weeds with their Hands; and yet I have known this Operation ſometimes coſt the Farmer Twelve Shillings an Acre; beſides the Damage done by treading down his Wheat; and after all, a ſufficient Quantity of them have eſcaped, to make a too plentiful Encreaſe in the next Crop of Corn.

The New Hoing-Husbandry in time will probably make ſuch an utter Ridance (1) of all ſorts of Weeds, except ſuch as come in the Air (2), that as long as this Management is properly continued, there is no Danger to be apprehended from them; which is enough to confute the old Error of equivocal Generation, had it not been already ſufficiently exploded, ever ſince that Demonſtration of *Malpighius's* Experiment. For if Weeds were brought forth without their proper Seeds, the Hoing could not hinder their Production, where the Soil was inclined naturally to Produce them.

(1) A very pernicious, large, Perennial-Weed, like *Burridge*, with a Blue Flower, infeſted a Piece of Land, for Time out of Mind; Hoing has deſtroy'd it utterly, not one of the Species has been ſeen in the Field theſe ſeven Years, tho' conſtantly Till'd and Ho'd.

(2) The Seeds of ſome Weeds may be ſuſpected to come in the Air; as the Seed of the Graſs that grew in *Cheap-ſide*, in the time of the Plague; But it might come from Seeds in the Dirt, brought thither by the Feet of People and Cattle, and by the Wheels of Coaches, Carts carrying Hay, or otherways; Continual Treading might keep it from growing, and when the Treading ceaſed, 'tis no wonder the Seeds ſhould furniſh the Streets with Graſs.

And I have obſerv'd on the Floors, Two Story high, of a lone, ruinous, uninhabited Houſe, being long uncover'd, a ſort of Herb growing very thick; I think it was *Pimpernel*, and believe that it's Seeds did not come thither in the Air; but in the Sand which was mix'd with the Morter that had fall'n from the Cielings, and 'tis like there were few Seeds at firſt, yet, theſe Ripening for ſeveral Years, ſhed their Seeds Annually, until the Floors became all over very thick planted: Beſides, Hay-Seeds and Pimpernel are too heavy to be carry'd far by the Air.

The

The Belief of that blind Doctrine might probably be one of the Causes, that made the Ancients despair of finding so great Success in Hoing, as now appears; or else, if they had had True Principles, they might perhaps have Invented and Improved that Husbandry, and the Instruments necessary to put it in Practice.

CHAP. IX.

REMARKS *on the* Bad HUSBANDRY, *that is so finely Express'd in VIRGIL's* First GEORGIC.

——*Terræ*
Pingue solum primis extemplo à mensibus anni
Fortes invertant tauri: glebasque jacentes
Pulverulenta coquat maturis solibus æstas.

'——Strait let the vig'rous Steer
'Turn the *Rich* Furrow, in the New-born Year,
'And Summer's Heat with rip'ning Suns pursue
'The Sluggish Glebe, and all the Clod subdue.

'——*afficiant lætis ne frugibus* herbæ;
'——lest the Weeds the smiling Blade withstand.

This is *Virgil's* Reason for Plowing Rich Land betimes, and shews the old Theory, which never gave any other Reason for Tillage, and Hoing, except Killing of Weeds.

'*At si non fuerit tellus fœcunda, sub ipsum*
'*Arcturum tenui* sat erit *suspendere sulco:*
'But if not *fat* the Soil, it will suffice,
'When bright *Arcturus* mounts the purple Skies,
'To Skim the Surface with a Gentle Share,
'And lift the Furrow lightly to the Air;

'——*Sterilem exiguus ne deserat* humor *arenam.*
'Lest Moisture —desert the Barren Sand.

He directs that Poor Land should be Plow'd Late, for Fear the Moisture should be Dry'd out of it.

This has more Need of being enrich'd by early and frequent Plowings; for all its Moisture will be exhal'd, and for Want of being Open'd, can receive little return from the Atmosphere, the later its Plow'd, the Dryer it will be.

The *Sat erit*, is therefore a great Mistake.

Tenui Sulco, (a Shallow Furrow) The Land being Steril requires, that it be Plow'd as Deep as the Staple will allow; for the poorer it is, the less Reason is there to leave any part of it Unplow'd; and shallow Plowings, tho' the Land be never so fine, lose much of the Benefit that Dews bring to the Ground; because the Earth being Hard below, will not suffer them to sink so Deep, but that they are again exhal'd in the Day; this keeps it Dryer and Poorer.

The *Mutatis fœtibus*, and *Inaratæ Gratia terræ*, are answer'd in Chap. *Tillage*, and Chap. *Change of* ~~Sorts~~. *Seeds*.

'*Sæpe etiam steriles incendere profuit agros,*
'*Atque levem stipulam crepitantibus urere flammis.*

It profits oft to Fire the Fruitless Ground,
And thirsty Stubble crackling all around.

'Tis

'Tis certain, that *Virgil* meant the Burning the Stubble upon Rich Land, and Burning the Turf it self of Barren Land (1); because Barren Land had no Stubble on it to be burnt; but the Custom of Burning the Stubble, on the Rich Plains about *Rome*, continues to this Time, and the chief Benefit of it is, that by this means, they are prevented from being an Incumbrance to the next Plowing, and their Ashes, together with the Dead bodies of Serpents, Lizards, *&c.* which the Flame kills, become a sort of Compost (tho' a very light one, and next to nothing in quantity) or Manure to the Soil, which is only Warm'd, not Burnt.

As to the other, *viz.* the Burning the Earth it self of the Barren Fields, especially of those which have a Shallow Staple, 'tis a Practice so pernicious, and carries away so much of the best part of the Surface, that 'tis not only (as far as I can be inform'd) wholly left off in *Italy*, but in most other Countries, where the Owners of Lands have any Regard to Posterity; for it certainly destroys those thin poor Fields, and after a few Crops, renders them scarce worthy the Name of an *Inheritance*.

The Reasons *Virgil* offers for explaining the Cause of this short Improvement of Burning this barren Land, are such, as abstracted from the Poetry, will appear to be utterly unbecoming the Character of a Philosopher, who pretends *Rerum cognoscere Causas*. His are such, that tho' contrary to one another, and Jarring among themselves, are all of them False, as,

Sive inde occultas vires, & pabula terræ
Pinguia concipiunt.
'Whether from thence by Nature's Secret Laws,
'Fresh Nourishment the Earth, and Vigour draws.

This is so far from being true, that the Fire instead of *Giving* any sort of Strength, or Nourishment to the Earth that is *Burnt*, *carries both away*, and brings nothing in room thereof. The great Decrease of its Weight (2) shews how much is missing.

——*Sive illis omne per ignem*
Excoquitur vitium, atque exudat inutilis humor.
'Or that the latent Vice is purg'd by Heat,
'And the redundant Humours waste in Sweat.

There was no Vice in it, to be boil'd out, except its being stockt with Grass, and wanting Tillage. Had there been Moisture in it, it would not have Burnt, therefore that must have been Dry'd out before the Fire could operate.

Seu plures calor ille vias, & cæta relaxat
Spiramenta, novas veniat qua succus in herbas:
'Or, that the Flames unusual Tracks explore,
'Relax the Grit, and open ev'ry Pore,
'Whence genial Moisture hastens through the Earth,
'Slides to the Root, and chears the tender Birth.

It does indeed so relax and open the Earth, that all that is Fruitful Breaths out of it; the Fire makes Room enough for the Juice to reach Plants, but the Mischief on't is, it leaves no Juice at all for them.

(1) Such Poor Land ought to be the oftner Plow'd to Enrich it, by making it still Finer, as the Salts which are left after Burning and Wasting the Best part of that Poor Thin Land, being spread upon the barren Remainder, will so Divide even that, by Fermenting therewith, as to cause it to produce a few Crops; But this cannot be so much Divided, or Pulveriz'd by the Plow; unless the Plowings be oftner repeated than any Body has ever yet repeated them, and if ever any Trial be made to attempt the Equalling these Ashes, it will be best to do it by Way of Hoing; because a Crop is rais'd by it; at the same time, to help defray the Expence of such Trial. How frequent Hoing brings Moisture, See Chap. Of *Hoing*.

(2) I am sorry to find that Mr. *Evelyn* should think, that an Intense Calcination of the Earth Increases the very Weight of the Mould; Since even Stone burnt to Lime, loses a Third part of its Weight by the Calcination; and Earth, being more Sulphureous, loses more of its Weight by being Burnt, and visibly emits more Smoak.

Sen durat magis, & venas astringit hiantes:
Ne tenues pluviæ, rapidive potentia solis
Aerior, aut Boreæ penetrabile frigus adurat.

'Or that the Heat the hollow Glebe constrains,
'Braces each Nerve, and knits the gaping Veins;
'Lest piercing Wet, or the swift Power of Day,
'More fierce, or scorching *Boreas* urge his Way.

Hey day! This is both contrary to what he said before of Relaxing and Opening, and to the Fact it self; for Fire having reduc'd the Earth (that it leaves) to Ashes, which are so Hollow, that Rain, Heat, and Cold will easily Enter them; so Loose that they will not become Hard or Dense, all their *Cement* being gone.

'Tis common for the Rain to wash them off from the Declivity of a Hill, and for the Wind to Blow them away from the Plain, they are so Light. And 'tis a *Demonstration* of their *Sterility*, that no manner of Vegetable will grow, or live in them: So that the Poet had much better have solv'd this Phœnomenon by a positive ingenuous *Je ne scai quoi*; Or to have left off at this Verse, *viz.*

Effetos cinerem immundum jactare per agros.

——nor o'er th' exhausted Sand
To spread vile Ashes with a friendly Hand.

From observing the Effect of these impure Ashes, he might have discover'd the Cause he so unfortunately Aims at; for it can be no other than, that the Cinereal Salts being Spread upon the unburnt Earth that is left, Ferment therewith, and reducing it into an almost infinite Number of Parts, increases proportionably that *Internal Superficies* describ'd in Chap. *Of Pasture of Plants*; but if we would compute the Loss we sustain in Waste and Diminution of the Staple of our Thin Land in Burning it, we should find these Ashes, a very Dear sort of Compost; for tho' two or three good Crops are receiv'd after this Manure; whose Salts Divide more than common Plowing can do; yet the Land is become so Thin, that whereas 'tis impossible to Injure it so much by Crops obtain'd from fair Tillage, but that in a few Years, it will recover its Fertility; yet the Mischief done by this Fire, will never suffer it to equal the same sort of *Unburnt* Land, until a general *Conflagration*.

Multum adeo, rastris glebas qui frangit inertes,
Vimineasque trahit crates, juvat arva:

Much too he helps the Field, who ev'ry Clod
With Harrows breaks, and drags the Hurdle's Load.

This way of Tilling the Land with Harrows, recommended by the Poet, seems to shew his Husbandry was degenerated from that of the old Romans, who said, *Male subactum Agrum qui occandus sit.* Col. That Field is Ill Till'd that wants Harrowing.

A yet worse Contrivance it was, to Till Land with a Hurdle made of Vine Twigs, this is so Puerile an Invention, that he might have directed it to be drawn by a Hobby-Horse.

A late Commentator interprets this Harrowing and Hurdling, to be of Use in Sowing upon the Back; that is, upon Once Plowing; had this Interpretation been omitted, *Virgil* might have been thought not to have amass'd together every one of the very worst Pieces of Husbandry, that could be met with in any Age or Country.

Rursus

Rursus in obliquum (1) *verso perrumpit aratro,*
Assails oblique, and thorough cuts again.

This is found not to attain the End of Tillage near so well, as Turning the Furrows back again into the same Places, where they were before breaking up, and not to Plow cross the Furrows until the Third plowing; this shews, that in those Days *Ceres* did choose her Favourites as many are now chosen, not for their Merits; since the most slovenly Husbandmen were honour'd with her Approbation.

Humida Solstitia atque hyemes orate serenas
Agricolæ:——

The Solstice moist, serene the Winter Sky,
For this, ye Swains, intreat the Powers on high.

Here he might have advised them to remedy, in some measure, the Inconveniencies of dry Weather, by frequently Hoing the Soil to open it, for the Reception of the Dews which moisten it, and refrigerate the Roots in the Night, after the scorching Heats of the Day: Since he knew that

Noctes lentas non deficit humor.

Distilling Moisture ne'er deserts the Night.

He might have advised an Expedient to obtain in part the Effects of *Hiemes serenæ*, *viz.* To plant the Corn in such a manner, that it might be protected from the Injuries of cold Winds and Water, as in the Chap. of *Wheat* is described.

Ipsa dies alios alio dedit ordine Luna
Felices operum. Quintam fuge: &c. (2)

For various Labours each revolving Moon
Gives happy Days; the Fifth be sure to shun.

Is this what the late Commentator in his Preface calls, An Appeal to Truth and Nature throughout all Ages of Mankind? Must vain and idle Superstition be thought Truth and Natural, because 'tis *Old*, tho' we know it to be False, and consequently against Nature? I'm sure 'tis far from shewing, that the Foundation of the whole Georgic is Truth; unless he left out this, and most of all the rest: For indeed I cannot find, One *new* useful Truth discover'd in all the Pages of the Georgic (3), tho' he says, every Page affords Instances of such; therefore I agree with that Commentator, that tis endless to enumerate Instances of that kind; because I hold, that *Nothing cannot be number'd.*

Hic segetes, illic veniunt felicius Uvæ:

The *Harvest* Here, There *Vines* more happy found.

Vines will grow as well, and better in Strong Land, but Light Land is more easily Ho'd, *&c.*

(1) Whilst the Green-side of the Furrow, which is turn'd downwards by the first Plowing, is Rotting, the Root-Sides being upwards, sends up Blades and Stalks of Grass from all the Joints of Roots expos'd to the Air; for every Joint has both Roots and Stalks included in it, the open Air Kills the Roots; but the Stalks are Kill'd for want of it; these revers'd Roots being become a new Turf, (which is nourished by such Roots as the Thickness and Largeness of the Furrow protect from Air) will continue to Grow, and hold the Earth together, until that be also turn'd downwards from the Reach of the Air: But in Cross-Plowing, not half the Furrows are turn'd, they are only heap'd up upon one another, and there the Air keeps the Grass alive for a long time; when that which is turn'd back the same way without Crossing is all Kill'd; and being Dead on both sides will grow no more; and the Land is much sooner brought into Tilth this way, than by Cross-Plowing, as Experience shews.

(2) Black-Acre is first sown, and on the right day of the Moon to begin upon; then continuing to sow, till in its Turn White-Acre is sown, on the Worst day of the Moon: Now what Reason could the Poet give, why White-Acre, sown on the Worst Day, should Prosper the better for Black-Acre's being sown on the Best Day? Answer: his Word; for certainly no other Oracle, but *Virgil's* Word, could have obtain'd a Place for any thing so Unphilosophical as this (about the Days of the Moon) to stand among the Transactions of that illustrious Society, whose Motto is *Nullius in Verba.*

(3) The natural Habit of Truth is a plain Dress; yet not suddenly found, being the Daughter of Time, therefore the Moderns have the Advantage of the Ancients.

Vines will grow where ever Corn will grow, if there be sufficient Heat to ripen the Grapes: And Corn will grow where ever Vines will.

Nonne vides, croceos ut Tmolus Odores,
India mittit Ebur, &c.
Do you not see how *Tmolus* his Perfumes,
Her Iv'ry *India*, soft *Sabæans* Gums,
How *Pontus* heady Castor sends from far,
The *Spaniard*'s Steel, ———

Should any Author in Prose, have given a Caution to the Italian Farmers against Planting their Lands with Perfumes, Ivory, Frankincense, Castor or Steel; Would he not be thought very Impertinent?

A late Commentator upon *Virgil*'s Second Georgic says (1), 'He is certain 'the Husbandry of *England* in general is *Virgilian*, which is shewn by the Paring 'and Burning the Surface; by Raftering, or Cross Plowing; and that in those 'Parts of *England*, which the Romans principally Inhabited, all along the 'Southern Coast, Latin Words remain to this Hour among Shepherds and 'Plowmen in their Rustick Affairs; and what will seem more strange at first 'sight to affirm, tho' in Fact it be really true, There is more of *Virgil*'s Hus-'bandry put in Practice in *England* at this Instant, than in *Italy* it self.

It's my Opinion, that the Italians, in Changing *Virgil*'s Field Husbandry (2), have acted more reasonably than these English who Retain it; because I think it impossible for any Scheme in general to be Worse. Mine Differing from it in all respects, warrants me in calling it *Anti-Virgilian*.

(1) In the Preface to his Translation of the Second *Georgic*, Page XVI.
(2) When *Virgil* says, ——— *Glebaque versat*
Æternum frangenda Bidentibus,
He treats only of the Vineyard Culture, not of the Field Husbandry.

Chap. X. *Of TURNEPS.*

AS far as I can be inform'd, 'tis but of late Years that Turneps have been introduc'd as an Improvement in the Field.

All Sorts of Land, when made fine by Tillage, or by Manure and Tillage, will serve to produce Turneps, but not equally; for Chalky Land is generally too Dry (a Turnep being a Thirsty Plant) and they are so long in such dry poor Land before they get into Rough Leaf, that the Fly is very apt to destroy them there; yet I have known them succeed on such Land, tho' rarely.

Sand and Gravel are the most proper Soil for Turneps; because that is most easily pulveriz'd, and its Warmth causeth the Turneps to grow faster, and so they get the sooner out of Danger of the Fly; and such a Soil, when well Till'd, and Horse-Ho'd, never wants a sufficient Moisture, even in the Driest Weather, and the Turneps being Drill'd, will come up without Rain, and prosper very well with the sole Moisture of the Dews, which are admitted as Deep as the Pulveration reacheth; and if that be to Five or Six Inches, the hottest Sun cannot Exhale the Dews thence in the Climate of *England*: I have known Turneps Thrive well in a very Dry Summer, by repeated Horse-Hoings, both in Sand, and in Land which is neither Sandy, nor Gravelly.

When I sow'd Turneps by Hand, and Ho'd them with a Hand-Hoe, the Expence was great, and the Operation not half perform'd, by the Deceitfulness of the Hoers, who left half the Land unho'd, and cover'd it with the Earth from the

the Part they did Hoe, and then the Grass and Weeds grew the faster: Besides in this manner a great Quantity of Land could not be managed in the proper Season.

When I Drill'd upon the Level (1), at three foot Intervals, a Trial was made between those Turneps and a Field of the next Neighbour's, sown at the same time, whereof the Hand-Hoing cost Ten Shillings per Acre, and had not quite half the Crop of the Drill'd, both being measur'd by the Bushel, on purpose to find the Difference (2).

In the new Method they are more certain to come up quickly; because in every Row, Half the Seed is planted about Four Inches Deep (3), and the other Half is planted exactly over that, at the Depth of Half an Inch, falling in after the Earth has cover'd the first Half: thus planted, let the Weather be never so Dry, the deepest Seed will come up; but if it Raineth (immediately after planting) the shallow will come up first; we also make it come up at Four (4) times, by mixing our Seed, half New, and half Old (the New coming a Day quicker than the Old) these four Comings up, give it so many Chances for Escaping the Fly, it being often seen, that the Seed sown over Night will be destroy'd by the Fly, when that sown the next Morning will escape; and *vice versa*; (5) or you may Ho-plow them, when you see the Fly is like to devour them; this will bury the greatest part of those Enemies; or else you may Drill in another Row, without new Plowing the Land.

This Method has also another Advantage of Escaping the Fly, the most certain of any other, and Infallible, if the Land be made Fine as it ought to be; this is to Roll it with a Heavy Roller a-cross the Ridges, after 'tis Drill'd, which closing up the Cavities of the Earth, prevents the Fly's Entrance and Exit, to lay the Eggs, Hatch, or bring forth the Young ones to prey upon the Turneps, which they might entirely Devour if the Fly came before they had more than the first two Leaves, which being form'd of the very Seed itself, are very Sweet; But the next Leaves are Rough and Bitter, which the Fly does not Love: I have always found the Rolling Disappoint the Fly, but very often it Disappoints the Owner also, who sows at Random; for it makes the Ground so hard, that the Turneps cannot Thrive; but look Yellow, dwindle, and grow to no Perfection, unless they have a good Hoing soon after the Rough Leaves appear; for when they stand long without it, they will be so poor and stunted, that the Hand-Hoe does not go Deep enough to recover them; and 'tis seldom that these Rolled Turneps can be Hand-Ho'd at the Critical time; because the Earth is then become so hard, that the Hoe will not Enter it, without great Difficulty, unless it be very Moist, and very often the Rain does not come to soak it until it be too late; but the Drill'd Turneps being in single Rows, with Six foot Intervals, may be Roll'd without Danger: For be the Ground never so hard, the Hand-Hoe will easily Single them out, at the Price of Six Pence per Acre or less (if not in Harvest) and the Horse-Hoe will in those wide Intervals, plow at any time, Wet or Dry; and tho' the Turneps should have been neglected till stunted, will go deep enough to Recover them to a flourishing Condition.

(1) 'Tis impossible to Ho-plow them so well when Planted upon the Level, as when they are Planted upon Ridges; for if we plow deep near to the Row, the Earth will come over on the Left-side of the Plow, and Bury the Young Turneps; but when they stand on Ridges, the Earth will almost all fall down on the Right-Side into the Furrow in the middle of the Interval.
(2) And I have since found, that Turneps on the same Land, planted on Ridges, with Six-Foot Intervals, make a Crop Double to those that are planted on the Level, or even on Ridges with Three-Foot Intervals.
(3) Turnep-Seed will come up from a greater Depth than most other sorts of Seeds.
(4) I have seen Drill'd Turnep-Seed come up Daily for a Fortnight together, when it has not been mixt thus, the Old with the New.
(5) I have had the first Turneps that came up, all destroy'd by the Fly, and about a Fortnight afterwards more have come up, and been Ho'd time enough, and made a good Crop.

Drill'd Turneps, by being no where but in the Rows, may be more easily seen than those which come up at Random, and may therefore be sooner singled out by the Hand-hoe; which is another Advantage; because the sooner (1) they are so set out, the better they will Thrive.

Three or Four Ounces of Seed is the usual Quantity to drill; but at Random, Three or Four Pound is commonly sown, which coming Thick all over the Ground, must exhaust the Land more than the other, especially since the sown must stand longer, before the Hoers can see to set them out.

The six Foot Ridges, whereon Turneps are drill'd in single Rows, may be left higher than for double Row'd Crops; because there will be more Earth in the Intervals, as the single Row takes up less.

There is no prefix'd Time for planting Turneps; because that must be according to the Heat or Richness of the Land; for some Land will bring them as forward, and make them as good, when planted the Beginning of *August*, as other Land will, when planted in *May*; but the most general Time is a little before, and a little after *Midsummer*.

Between these Rows of Turneps, I have planted Wheat in this manner, *viz.* About *Michaelmas*, the Turneps being full-grown, I plow'd a Ridge in the Middle of each of their Intervals, taking most of the Earth from the Turneps, leaving only just enough to keep them alive; and on this Ridge drill'd my Crop of Wheat (2), and towards the Spring pull'd up my Turneps, and carry'd them off for Cattle.

When Turneps are planted too late, to have Time and Sun for attaining to their full Bulk, some drill a Double Row, on each Six Foot Ridge, with a Partition of Fourteen Inches; but I am told, that in this Double Row the Turneps do not, even at that late Season, grow so large, as those planted at the same time in Single Rows; tho' the Double Row requires double the Expence in setting out; and there will be less Earth Ho'd by the Breadth of Fourteen Inches of the deepest Part of the Ridge; and consequently the Land will be the less improv'd for the next Crop. We need not to be very exact, in the Number (3) or Distance (4) we set them out at: We contrive to leave the Master-Turneps, (when there is much Difference in them) and spare such when near one another, and leave the more Space before and behind them; but if they be Three Master-Turneps too near together, we take out the Middlemost.

Turneps that were so thick as to touch one another when half grown, by means of well Hoing their wide Intervals, have afterwards grown to a good Bigness, and by thrusting against one another became Oval instead of Round.

'Tis beneficial to Hoe Turneps (especially the first time) alternately, *viz.* to Hoe every other Interval, and throw the Earth back again, before we Hoe the other Intervals; for by this means the Turneps are kept from being stunted; 'tis better to have Nourishment given them moderately at Twice, than to have it all at once, and be twice as long before a repetition (5).

(1) The sooner they are made Single the better; but yet, when they are not very Thick, they may stand till we have the best Convenience of Singling them, without much damage; but when they come up extraordinary Thick, 'twill be much more difficult to make them Single, if they are neglected at their very first coming into Rough Leaf.

(2) This Wheat, being thus Drill'd on the new Ridges, made in the Intervals, betwixt the Rows of Turneps, being well Horse-Ho'd in the Spring, prov'd a very good Crop; it was Drill'd in Treble Rows, the Partitions seven Inches each.

(3) The least Number will be the Largest Turneps, yet we should have a competent Stock, which I think is not less than Thirty on a square Perch.

(4) The Distance need not to be regular; for when a Turnep has Six Inches of Room on One side, and Eighteen Inches on the Other side, 'tis almost as well as if there was one Foot on each side; tho' then it would be equally distant from the Two Turneps betwixt which it stood.

(5) Sometimes, when Turneps are planted late, this Alternate Hoing suffices, without any Repetition; but when they are planted early, 'twill be necessary to Hoe them again; especially if Weeds appear.

Tho'

Tho' the Earth on each Side the Row be left as narrow as possible (1), yet 'tis very profitable to Hoe that little with a Bidens (2), called here a Prong-Hoe, for this will be sure to let out all the Roots, into the Intervals, even such as run very nearly Parallel to the Rows.

This Alternate way of Hoing Plants, that grow in single Rows, is of such vast Advantage, that Four of these, which are but equal to Two of the *whole* Hoings in Labour, are near equal to Four *whole* Hoings in Benefit; for when one Side is well nourished, the other Side cannot be starv'd (3).

Besides, where a great Quantity of Turneps are to be Ho'd, the last Ho'd may be stunted, before the first are finish'd by *whole* Hoings.

In this Alternate Hoing, the Ho-Plow may go deeper (4), and nearer to the Row, without danger of Thrusting it down on the Left-side, whilst the Plants are very Small; because the Earth on the other Side of the Row, always bears against it for its Support: But in the *whole* Hoing, there is an open Furrow left the first time on both Sides of the Row, and there is danger of throwing it into one Furrow in plowing the other; or if the Row is not thrown down, it may be too much dry'd in hot Weather, by the Two Furrows lying too long Open: Yet when the Turneps are large before Hoing, we need not fear either of these Dangers, in giving them a *whole* Hoing; as I have found by Experience, even when there has been left on each Side of the Row, only about Three Inches Breadth of Earth; tho' it is not best to suffer it to lie long Open (5).

Dry Weather does not injure Turneps when Horse-ho'd, as it does sown Turneps; the Hand-hoe does not go Deep enough to keep the Earth moist, and secure the Plants against the Drought; and that is the best Season for Horse-hoing, which always can keep the Roots Moist.

Dung and Tillage together, will attain the necessary Degree of Pulveration, in less time than Plowing can do alone; therefore Dung is more useful for Turneps; because they have commonly less time to Grow, than other Plants.

Turneps of Nineteen Pounds weight I have several times heard of, and of Sixteen Pounds weight often known; and Twelve Pounds may be reckon'd the middle Size of great Turneps: And I can see no Reason, why every Turnep should not arrive to the full Bigness of its Species, if it did not want part of its due Nourishment.

The greatest Inconvenience, which has been observ'd in the Turnep-Husbandry, is when they are Fed off late in the Spring (which is in many Places the greatest Use of them) there is not Time to bring the Land in Tilth for Barley, the Loss of which Crop, is some times more than the Gain of the Turneps: this is entirely remedied by the Drilling Method; for by that, the Land may be almost as well Till'd before the Turneps are eaten, or taken off, as it can afterwards.

(1) I do not think that we can go nearer to the Plants with the Ho-plow, than within Three Inches of their Bodies.

(2) We ought not to use the Bidens for this purpose, before the Perpendicular Roots are as big as ones Little-Finger.

(3) But yet sometimes the Weeds, or other Circumstances, may make it proper to give them a *whole* Hoing at first.

(4) This Deep plowing, so near to the Row, is very beneficial at first; but afterwards when the Plants are grown large, and have sent their Roots far into the Intervals, it would almost totally Dis-root them; and they being Annuals, might not Live long enough for a new stock of Roots to extend so far as is necessary, to bring the Turneps to their full Bigness.

Note. At the Last Hoing, we generally leave a Broad Deep Trench in the Middle of each Interval.

(5) But, if the Weather prove Wet, we always suffer those Furrows to lie Open until the Earth be Dry enough to be turn'd back again to the Row, without Smearing or Sticking together; unless such Weather continue so long, that the Weeds begin to come up, and then we Throw back the Furrows to Stifle the Weeds, before they grow large, tho' the Earth be Wet.

If

If Turneps be sown in *June*, or the Beginning of *July*, the most Experienc'd Turnep-Farmers, will have no more than Thirty to a square Perch left in Hand-Hoing, and find that when more are left, the Crop will be less; but in Drilling the Rows at Six Foot Intervals, there may be Sixty (1) to a Perch; and the Horse-hoe, by Breaking so much more Earth than the Hand-hoe does, can Nourish Sixty Drill'd, as well as Thirty are by the Sowing Method, which has been made appear upon Trial; but, I think, about Forty or Forty-five better than Sixty on a Perch; and the Number of Plants should always be proportion'd to the Natural and Artificial Pasture, which is to maintain them; and Sixty Turneps on a square Perch, at Five Pound each (which is but a Third of the Weight of the large Size of Sheep-Turneps) make a Crop of above Eighty Quarters to an Acre (2).

When Turneps are planted late (especially upon poor Ground) they may be a greater Number than when planted early; because they will not have time enough of Heat to enjoy the full benefit of Hoing, which would otherwise cause them to grow Larger.

The greatest Turnep-Improvement used by the Farmer, is for his Cattle in the Winter, One Acre of Turneps will then Maintain more than Fifty of Meadow, or Pasture Ground.

'Tis now so well known, that most Cattle will Eat them, and how much they breed Milk, *&c.* that I need say nothing about it.

Sheep always refuse them at first, and unless they have eaten them whilst they were Lambs, must be ready to Starve, before they will Feed on them; tho' when they have Tasted them, they will be Fatted by them: and I have seen Lambs of Three Weeks old, Scoop them prettily, when those of a Year old (which are call'd Tegs) have been ready to Die with Hunger amongst them; and for three or four Days would not touch them, but at last Eat them very well.

In some Places, the greatest Use of Turneps (except for Fatting Oxen and Sheep) is for Ews and Lambs in the Spring, when natural Grass is not grown on Poor Ground; and if the artificial Grass be then Fed by the common manner, the Crop will be Spoil'd; and it will yield the less Pasture all the Summer: I have known Farmers, for that Reason, oblig'd to keep their Ews and Lambs upon Turneps (tho' run up to Seed) even until the Middle of *April*.

There are now Three Manners of Spending Turneps with Sheep, amongst which I do not reckon the Way of putting a Flock of Sheep into a large Ground of Turneps without dividing it; for in that Case the Flock will destroy as many Turneps in a Fortnight, as would keep them well a whole Winter.

The first Manner now in use is, To divide the Ground of Turneps by Hurdles, giving them leave to come upon no more at a time than they can eat in one Day, and so advance the Hurdles further into the Ground daily, until All be spent; but we must observe, that they never Eat them Clean this Way, but leave the Bottoms and Outsides of the Turneps, they have Scoop'd, in the Ground. These Bottoms, People pull up with Iron Crooks, made for that purpose; but their Cavities being Tainted with Urine, Dung, and Dirt from their Feet, tho' the

(1) Yet I think Sixty too many, unless the Soil be Rich, and very well Pulveriz'd.

(2) I have had Turneps upon Poor Undung'd Land that weighed Fourteen Pound a-piece; but these were only such as had more Room than the rest. I have seen a whole Waggon-Load of Drill'd Turneps spread on the Ground, wherein I believe one could not have found One that weighed so little as Six Pound; or if the Rows had been searched before they had been pull'd up, they would have weighed Seven or Eight Pound a-piece one with another; we weighed some of them that were Thirteen, some Fourteen Pound each, and yet they stood pretty Thick. There might be, as I guess, about Fifty on a square Perch; but this Crop was on Sandy Land not Poor, and was Dung'd the Third or Fourth Year before, and had every Year a Ho'd Crop of Potatoes, or Wheat, until the Year wherein the Turneps were Planted.

the Sheep do Eat some of the Pieces, the Waste more, and many the Crooks leave behind in the Earth; and even what they do eat of this tainted Food, can't Nourish them so well as that which is Fresh and Cleanly.

The Second Manner is, To Move the Hurdles every Day, as in the First; but that the Sheep may not Tread upon the Turneps, they Pull them up first, and then advance the Hurdles as far Daily, as the Turneps are pull'd up, and no farther; by this means there is not that Waste made as is in the other Way, the Food is eaten Fresh and Clean, and the Turneps are pull'd up with less Labour than their Pieces can be (1).

The Third Manner is, To Pull them up, and to carry them into some other Ground in a Cart, or Waggon, and there spread them every Day, on a New Place, where the Sheep will Eat them up clean, both Leaf and Root: This is done when there is Land not far off, which has more Need of Dung, than that where the Turneps grow, which perhaps is also too Wet for Sheep in the Winter, and then the Turneps will, by the too great Moisture and Dirt of the Soil, spoil the Sheep, and in some Soils give them the Rot; yet such Ground will bring forth more and larger Turneps than Dry Land; and when they are carry'd off and eaten on plow'd Ground in dry Weather, and on Green-sward in wet Weather, the Sheep will Thrive much better; and that moist Soil, not being Trodden by the Sheep, will be in much the better Order for a Crop of Corn. And generally the Expence of Hurdles, and Removing them being saved, will more than countervail the Labour of Carrying off the Turneps.

These Three Ways of spending Turneps with Sheep are common to those Drill'd, and to those Sown in the Random manner; but they must always be Carry'd off for Cows and Oxen; both which will be well Fatted by them, and some Hay in the Winter; the Management of these is the Business of a Grazier.

(1) I have seen Three Labourers work every day with their Crooks, to pull up these Pieces, which was done with much difficulty, the Ground being trodden very hard by the Sheep; when one Person, in Two Hours time, would have pull'd up all the *whole* Turneps daily, and the Sheep would have eaten them clean; but so many of those Pieces were dry'd and spoil'd, that after the Land was sown with Barley, they appear'd very Thick upon the Surface, and there could not be much less than Half the Crop of Turneps wasted, notwithstanding the Contrivance of these Crooks.

Chap. XI. *Of WHEAT.*

THO' all sorts of Vegetables may have great Benefit from the Hoe, because it supplies them with Plenty of Food, at the time of their greatest need, yet they do not all equally require Hoing; but the Plant that is to live the longest, should have the largest Stock of Sustenance provided for it: generally Wheat lives, or ought to live, longer than other sorts of Corn; for if it be not sown before Spring, its Grain will be thin, and have but little Flour in it, which is the only useful part for making Bread. And when sown late in the Winter, 'tis in great danger of Death from the Frost, whilst weak and tender, being maintain'd (as a Fœtus) by the umbilical Vessels, until the Warmth of the Sun enables it to send out sufficient Roots of its own to subsist on, without help of the *Ovum*.

To prevent these Inconveniencies, Wheat is usually sown in Autumn, hence having about Thrice the time to be maintain'd that Spring Corn hath, it requires a larger supply of Nourishment, in proportion to that longer time; not because the Wheat in its Infancy consumes the Stock of Food, during the Winter, proportionably to what it does afterwards; but because, during that long Interval betwixt Autumn and Spring Seed-times, most of the Artificial Pasture is Naturally lost, both in light and in strong Land.

For this very Reason is that extraordinary Pains of Fallowing and Dunging the Soil, necessary to Wheat; tho', notwithstanding all that Labour and Expence, the Ground is generally grown so Stale by the Spring, and so little of the Benefit of that chargeable Culture remains, that, if Part of the same Field be sown in the Beginning of *April*, upon fresh Plowing, without the Dung or Year's Fallow, it will be as great or a greater Crop, in all respects, except the Flour, which fails only for want of Time to fill the Grain.

Poor light Land, by the common Husbandry, must be very well Cultivated and Manur'd, to maintain Wheat for a whole Year, which is the usual Time it grows thereon; and if it be sown late, the greatest Part of it will seldom survive the Winter, on such Land; and if it be sown very early on strong Land, tho' Rich, well Till'd and Dung'd, the Crop will be worse than on the Poor light Land sown early. So much do the long Winter's Rains cause the Earth to subside, and the divided Parts to coalesce and lock out the Roots from the Stock of Provision, which tho' it was laid in abundantly at Autumn, the Wheat has no great occasion of, until the Spring, and then the Soil is become too hard for the Roots to penetrate; and therefore must Starve (like *Tantalus*) amidst Dainties, which may tempt the Roots, but cannot be attain'd by them.

But the New Method of Hoing gives, to strong and to light Land, all the Advantages, and takes away all the Disadvantages of both, as appears in the Chapters of *Tillage*, and *Hoing*. By this Method the strong Land may be planted with Wheat as early as the light (if Plow'd dry) and the Hoe-Plow can, if rightly apply'd, raise a Pasture to it, equal to that of Dung in both sorts of Land.

About the Year 1701, when I had contrived my Drill for planting St. Foin, I made use of it also for Wheat, drilling many Rows at once, which made the Work much more compendious, and perform'd it much better than Hands could do, making the Channels of a Foot distance, drilling in the Seed and covering it, did not in all amount to more than Six-pence per Acre Expence, which was above Ten times over-paid by the Seed that was saved; for One Bushel to an Acre was the Quantity drill'd; there remain'd then no need of Hand-work, but for the Hoing; and this did cost from Half a Crown to Four Shillings per Acre. This way turn'd to a very good Account, and in considerable Quantities; it has brought as good a Crop of Wheat on Barley Stubble, as that sown the common Way on Summer Fallow; and when that sown the old Way, on the same Field on Barley Stubble, entirely fail'd, tho' there was no other Difference but the Drilling and Hoing: It was also such an Improvement to the Land, that when one Part of a strong whitish Ground, all of equal Goodness, and equally Fallow'd and Till'd, was Dung'd and Sown in the common Manner, and the other Part was thus Drill'd and Hand-Ho'd without Dung, the Ho'd Part was not only the best Crop, but the whole Piece being Fallow'd the next Year, and Sown all alike by a Tenant, the Ho'd Part produc'd so much a better Crop of Wheat than the Dung'd Part, that a Stranger would have believ'd by looking on it, that, that Part had been Dung'd which was not, and that Part not to have been Dung'd which really was.

Scarce any Land is so unfit, and ill prepar'd for Wheat, as that where the natural Grass (1) abounds, most other sorts of Weeds may be dealt withal when they come among Drill'd Wheat; but 'tis impossible to extract Grass from the Rows, therefore let that be kill'd before the Wheat be planted.

The Six Foot Ridges being Eleven, on Sixty-six Foot, which is an Acre's

(1) One Bunch of natural Grass, Transplanted by the Plow into a Treble Row of Wheat, will destroy almost a whole Yard of it.

Breadth,

Breadth, ought to be made Length-ways of the Field, if there be no Impediment against it; as if it be a Hill or any considerable Steepness, then they must be made to run up and down, whether that be the Length or Breadth of the Piece; for if the Ridges should go Cross such a Hill, they could not be well Horse-ho'd; because it would be very difficult to turn a Furrow upwards, close to the Row above it, or to turn a Furrow downwards, without burying the Row below it; and even when a Furrow is turn'd from the lower Row, enough of the Earth to bury that Row will be apt to run over on the Left-side of the Plow; unless it goes at such a Distance from the Row, as to give it no Benefit of Hoing.

These Ridges should be made straight and equal, and to make them straight (1) all good Plowmen know how; and they will by setting up Marks to look at, Plow in a Line like the Path of an Arrow: But to make the Ridges equal, 'tis necessary to mark out a Number of them, before you begin to Plow, by short Sticks set up at each End of the Piece, and then if one Ridge happen to be a little too Broad, the next may be made the Narrower; for if the Plow comes not out exactly at the second Stick, the two Ridges may be made equal by the next Plowing or by the Drilling; but if many contiguous Ridges should be too wide or too narrow, 'twill be difficult to bring them all to an equality afterwards, without levelling the whole Piece, and laying out the Ridges all anew.

The exact Height of Ridges which is best I cannot determine (2), a different Soil may require a different Height, according to the Depth, Richness, and Pulveration of the Mould. As Wheat covets always to lie dry in the Winter, so there is no other way to keep it so dry as these Ridges; for when they are after the first Hoing about Eighteen Inches broad, with a Ditch on each Side, of almost a Foot deep, the Rain-Water runs off such narrow Ridges as fast as it falls, and much sooner (3) than 'tis possible for it to do from broad Ridges.

And the deeper the Soil, the more occasion there commonly is of this high Situation; because such Land is wetter, for the most part, than shallow Land, where we cannot make the Furrows so deep, nor the Ridges so high (4), as in deep Land; for we must never Plow below the Staple. I see the Wheat on these Ho'd Ridges flourish, and grow vigorously in wet Weather, when other Wheat looks Yellow and Sickly.

The same wide Interval, which is Ho'd betwixt Ridges the first Time, with two Furrows, must have had four Furrows, to Hoe it on the Level; or else the Furrow, that is turn'd from the Row, would rise up, and a great Part of it fall over to the Left-hand, and bury the Row; but when turn'd from a Ridge, it will all fall down to the Right-hand.

You must not leave the Tops of the Ridges quite so Narrow and Sharp for Drilling of Wheat, as you may for Drilling Turneps; Wheat being in Treble Rows, but Turneps generally in Single Rows (5). This is our Method of making Ridges for the first Crop of Drill'd Wheat.

(1) But if the Piece be of such a Crooked or Serpentine Form, that the Ridges cannot well be Plow'd straight the first Time, 'tis best to Drill it upon the Level; and then the Marking Wheels may Direct for making the Rowgall Parallel and Equidistant, which will guide the Plow to make all the Ridges for the next, and all the subsequent Crops as equal.

(2) I find by Measuring my Wheat Ridges in the Spring, that none of them are quite a Foot High; and some of them only Six Inches; but I know not how much they have subsided in the Winter, for they were certainly Higher when first made.

(3) Water, when it runs off very soon, is Beneficial, as is seen in water'd Meadows; but where it remains long on, or very near the Bodies of Terrestrial Plants, it Kills them, or at least is very Injurious to them.

(4) If we should make our Ridges as High on a shallow Soil, as we may on a deep Soil, there would be a Deficiency of Mould in the Intervals of equal Breadth with those of a Deep Soil.

(5) A Single Row taking up less of the Breadth, may be afforded to have more of the Ridge's Depth; because it leaves the Interval Wider.

But

But the Method of making Ridges for a ſucceeding Crop, after the former is Harveſted, is beſt perform'd as follows: In making Ridges for Wheat after Wheat, you muſt raiſe them to their full Height, before you plow the old Partitions, with their Stubble, up to them; for if you go about to make the Ridges higher afterwards, the Stubble will ſo mix with the Mould of their Tops, that it may not only be a Hindrance to the Drill, but alſo to the firſt Hoing; becauſe if the Hoe-Plow goes ſo near to the Rows as it ought, it would be apt to tear out the Wheat-Plants along with the Stubble.

In Reaping, we cut as near as we can to the Ground (1), which is eaſily done, becauſe the Stalks ſtand all cloſe together at Bottom, contrary to thoſe of ſown Wheat.

I find this Stubble, when 'tis only mixt with the Intervals, very Beneficial to the Hoing of my Wheat; but I know not whether it may be ſo in Rich Miry Land.

As ſoon as conveniently you can, after the Crop of Wheat is carry'd off (if the Trench in the Middle of each wide Interval be left Deep enough by the laſt Hoing) go as near as you can to the Stubble with a common Plow, and turn two large Furrows into the Middle of the Intervals, which will make a Ridge over the place where the Trench was: But if the Trench be not deep enough, go firſt in the Middle of it with one Furrow; which, with Two more taken from the Ridges, will be three Furrows in each Interval; continue this Plowing as long as the dry Weather laſteth; and then finiſh, by turning the Partitions (whereon the laſt Wheat grew) up to the New Ridges, which is uſually done at Two great Furrows. You may Plow theſe laſt Furrows, which compleat the Ridges, in wet Weather.

To make a Six Foot Ridge very high, will ſometimes require more Furrows; as when the Middle of the Intervals are open very wide and deep, then Six Furrows to the whole Ridge may be neceſſary, and they not little ones; and the Seaſon makes a difference, as well as the Size of the Furrows, for when the Fine Mould is very dry (which is beſt) it will much of it run to the Left-hand before the Plow, and alſo more will run back again to the Left after the Plow is gone paſt it.

But when ſuch Ridges have been made for Wheat, and the Seaſon continues long too Dry for Planting it, and the Stubble not thrown up, we then plow one Deep Furrow on the Middle of each Ridge, and then Plow the whole Ridge at Four Furrows more, which will raiſe it very High. This way of Re-plowing the Ridges, moves all the Earth of them, and yet is done at Five Furrows.

The Furrows, neceſſary for raiſing up the Ridges, muſt be more, or fewer, in regard to the Bigneſs of them; becauſe Six ſmall Furrows may be leſs than Four great ones. 'Tis not beſt to Plow the Stubble up to the Ridges, until juſt before Planting (eſpecially in the early Plowing) becauſe that will hinder the Re-plowing of the firſt Furrows, which, if the Seaſon continues dry, may be neceſſary: Sometimes we do this by Opening one Furrow in the Middle of the Ridge, ſometimes Two, and afterwards raiſe up the Ridges again; and when they are become moiſt enough at Top (the old Partitions being Plow'd up to them) we Harrow them once (and that only Length-ways) and then Drill them.

(1) When Wheat is Reap'd very low, the Stubble is no great Impediment; and I do this when I am forc'd to enlarge the Breadth of my Ridges, or to Change their Bearing, as I do when I find it convenient for them to point Croſs-Ways of the Field inſtead of Length-Ways; as if one End of it be Wetter than the other; For 'tis inconvenient, that one End of a Ridge ſhould be in the Wet part, and the other in the Dry; becauſe, in that Caſe, we cannot Hoe the Dry End without Hoing the Wet at the ſame time; and whilſt we Attend for the Wet part to become Dry, it may happen, that the Seaſon for Hoing the Whole (if the Quantity be great) may be loſt.

There

There is a Neceſſity of Plowing the old Partitions up to the new Ridges, to ſupport their other Earth from falling down by the Harrowing and Drilling, which would elſe make them level.

Our Ridges, after the firſt Time of Plowing, excel common Ridges of the ſame Heighth; becauſe theſe tho' as Deep in Mould at the Tops, have little of it Till'd at the laſt Plowing; but ours, being made upon the open Trenches, conſiſt of new till'd pulveriz'd Mould, from Top to Bottom.

'Tis a general Rule, That all Sorts of Grain and Seeds proſper beſt, ſown when the Ground is ſo Dry, as to be broken into the moſt Parts by the Plow. The Reaſon why Wheat is an Exception to that Rule is, becauſe it muſt endure the Rigours of Winter, which 'tis the better able to do, by the Earth's being preſs'd, or trodden harder and cloſer to it (1), as it is when moved wet.

If Wheat were as hardy as Rye, and its Roots as patient of Cold, it might, no doubt, be ſown in as dry a Seaſon as Rye is, and proſper the better for it, as Rye doth. This will appear, if Wheat and Rye be both ſown in the ſame dry Seaſon, after the Winter is over.

But as Wheat requires to have the Earth lie harder on, and about it, in the Winter; ſo it alſo requires more Dung (or ſomewhat elſe) to diſſolve the Earth about its Roots, after the cold Winter is paſt, than Rye doth, whoſe Roots never were ſo much confined.

'Tis another general Rule, That all Sorts of Vegetables thrive beſt, when ſown on freſh till'd Ground, immediately after 'tis Plow'd.

Wheat is an Exception to this Rule alſo; for 'tis better to Plow the Ground dry, and let it lie 'till the Weather moiſtens it (tho' it be ſeveral Weeks) and then Drill the Wheat: The Harrows and the Drill will move a ſufficient Part of the Ground, which will ſtick together for defence of the ſmall Roots, during the Winter, the reſt of the Mould lying open, and divided underneath until Spring, to Nouriſh them.

There is a ſort of binding Sand, that requires not only to be plow'd dry, but ſow'd dry alſo; or elſe the Wheat will dwindle in the Spring, and fail of being a tolerable Crop.

But what I mean by dry Plowing, is not that the Land ſhould always be ſo void of Moiſture, as that the Duſt ſhould fly; but it muſt not be ſo wet, as to ſtick together (2). Neither ſhould we Drill when the Earth is wet as Pap, it ſuffices that it be moiſt, but moiſter in light Land, than in ſtrong Land, when we Drill.

If the Two Furrows, whereon the Treble Row is to ſtand, be plow'd wet, the Earth of the Partitions may grow ſo hard by the Spring, that the Roots cannot run freely therein, unleſs there be Dung to ferment and keep it open.

So we ſee that a ſteep Bank, made of wet Earth, will lie faſt for ſeveral Years, when another made of the ſame Earth dry, will moulder, and run down very ſoon; becauſe its Parts have not the Coheſion that holds the other together, it continues open and more porous, and crumbles continually down.

I have ſeen tryals of this difference betwixt plowing Dry, and plowing Wet, for planting of Wheat, both in the Old way and in the Drilling way, but moſt in the latter; and never ſaw an Inſtance where the Dry plowing did not outdo the Wet; if the Wheat was not planted thereon before the Earth was become moiſt enough at Top.

(1) 'Tis for that Reaſon, that Farmers drive their Sheep over very light Land, as ſoon as 'tis ſown with Wheat, to Tread the (Top or) Surface of it Hard; and then the Cold of the Winter cannot ſo eaſily penetrate, to Kill the Roots of the Tender Plants.

(2) But the Drier 'tis Plow'd, the better.

And ſtrong Land plow'd wet in *November*, will be harder in the Spring, than if plow'd dry in *Auguſt*; tho' it would then have Three Months longer to lie.

After Rain, when the Top of the Ground is of a fit Moiſture for Drilling, Harrow it with Two light Harrows, drawn by a Horſe going in the Furrow betwixt Two Ridges; once will be enough, the Furrow being juſt broke to level, or rather ſmooth it for the Drill.

If the Veerings (1) whereon the next Crop is to ſtand, be plow'd Dry, we may drill at any Time during the common and uſual Wheat-Seed-Time, that is proper for the Sort of Wheat to be drill'd, and the Sort of Land, whether that be *early* or *late*, we may drill *earlier*, but not *later* than the ſowing Farmers. But I have had good Crops of Wheat drill'd at all Times betwixt Harveſt, and the Beginning of *November*.

For the Benefit of the middle Rows, 'tis better not to drill Wheat on ſtrong Land before the uſual Seaſon; becauſe the later 'tis planted, the more open the Partitions will be for the Roots of thoſe Rows to run thorough them in the Spring: and yet if the Earth of the Partitions be plow'd very wet, tho' late, they may be harder at the Spring, than thoſe which are plow'd early and dry.

There is a Sort of Wheat call'd by ſome *Smyrna Wheat*, it has a prodigious large Ear, with many leſſer (or collateral) Ears, coming all round the Bottom of this Ear; as it is the largeſt of all Sorts of Wheat, ſo it will diſpenſe with the Nouriſhment of a Garden, without being over fed, and requires more Nouriſhment than the Common Husbandry will afford it; for there its Ears grow not much bigger than thoſe of common Wheat; this I believe to be, for that Reaſon, the very beſt Sort for the Hoing Husbandry; next to this I eſteem the White-Cone Wheat, then the Grey-Cone. I have had very good Crops from other Sorts, but look upon theſe to be the beſt.

When Wheat is planted early, leſs Seed is required, than when late; becauſe leſs of it will Die in the Winter, than of that planted late, and it has more time to Tiller (2).

Poor Land ſhould have more Seed than rich Land, becauſe a leſs Number of the Plants will ſurvive the Winter on poor Land.

The leaſt quantity of Seed may ſuffice for rich Land that is planted early; for thereon very few Plants will die: and the Hoe will cauſe a ſmall Number of Plants to ſend out a vaſt Number of Stalks, which will have large Ears, and in theſe, more than in the Number of Plants, conſiſts the Goodneſs of a Crop (3).

Another thing muſt be conſider'd, in order to find the juſt Proportion of Seed to plant; and that is, that ſome Wheat has its Grains twice as Big as other Wheat of the ſame Sort, and then a Buſhel (4) will contain but half the Number of Grains; and one Buſhel of Small-Grain'd Wheat will plant as much Ground as two Buſhels of the Large-Grain'd; for in truth 'tis not the Meaſure of the Seed, but the Number of the Grains, to which reſpect ought to be had in Apportioning the Quantity of it to the Land.

(1) The Word Veering is, I believe, taken from the Seamen, and ſignifies to Turn; it is the Plowman's Term for Turning two Furrows toward each other, as they muſt do to begin a Ridge; and therefore they call the Top of a Ridge, a Veering; they call the Two Furrows that are turn'd from each other at the Bottom, between Two Ridges, a Henting, *i. e.* an Ending; becauſe it makes an End of Plowing Ridges.

Our Intervals wholly conſiſt either of Veerings or Hentings; when Two Furrows are turn'd from the Rows, they make a Veering; when turn'd towards the Rows, they are a Henting, which is the Deep Wide Trench in the Middle of an Interval.

(2) To *Tiller* is to branch out into many Stalks, and is the Country Word that ſignifies the ſame with *Fruticare*.

(3) A too great Number of Plants do neither Tiller, nor produce ſo large Ears, nor make half ſo good a Crop, as a bare competent Number of Plants will.

(4) Our Buſhel contains Seventy Pound of the beſt Wheat.

Some

Some have thought, that a large Grain of Wheat would produce a larger Plant than a ſmall Grain, but I have full Experience to the contrary. The ſmall Grain indeed, ſends up its firſt ſingle Blade in proportion to its own Bulk; but afterwards becomes as large a Plant, as the largeſt Grain can produce, *ceteris paribus*.

Six Gallons of middle-ſiz'd Seed we moſt commonly drill on an Acre; yet on rich Land planted early, Four Gallons may ſuffice; becauſe then the Wheat will have Roots at the Top of the Ground before Winter, and Tiller very much, without danger of the Worms, and other Accidents that late planted Wheat is liable to.

If its Drill'd too thick, 'twill be in danger of Falling; if too thin, it may happen to Tiller ſo late in the Spring, that ſome of the Ears may be blighted, yet a little thicker or thinner does not matter.

As to the Depth, we may plant from half an Inch to three Inches deep: If planted too deep, there is more danger of its being eaten off by Worms, betwixt the Grain and the Blade (1); for as that Thread is the Thread of Life during the Winter (if not planted early) ſo the longer the Thread is, the more danger will there be of the Worms (2).

'Tis a neceſſary Caution to beware of the Rooks, juſt as the Wheat begins to peep; for before you can perceive it to be coming up, they will find it and dig it up to eat the Grain; therefore you muſt keep them off for a Week or Ten Days, and in that time the Blade will become Green, and the Grain ſo much exhauſted of its Flour, that the Rooks think it not worth while to dig after it.

But the Rooks do not moleſt Wheat that is planted before or a little after St. *Michael*; for then there remains Corn enough in the Fields, which is left at Harveſt above Ground, that Rooks prefer always before Corn which muſt coſt them the Labour of digging to find it.

Of Partitions between Double, Treble, and Quadruple Rows.

The double Row has but one Partition, and this is beſt to be uſed when the Land is ſuſpected to be full of the Seed of ſuch Weeds as muſt be taken out by the Hand-Hoe; in this Partition while they are young, thoſe which come up in the very Rows, may be pull'd out when they are grown to a proper Bigneſs.

This Partition I ſhould chooſe to have a Foot (3) Wide, becauſe I have had whole Fields drill'd, all at that Diſtance, Hand-Ho'd at the Expence of Four Shillings *per* Acre; and therefore when there is but one Foot in Six, it ought to coſt but a proportionable Price *per* Acre.

The common Width of the two Partitions of the treble Rows is, either Seven or Eight Inches each. To find out the beſt Diſtance of planting theſe Rows, I made one of the Partitions Six Inches, and the other Nine Inches; and they being harrow'd by a common Harrow, whoſe Tines covering the Rows, ſometimes from one Side, ſometimes from the other Side, made thoſe Partitions yet more unequal; in theſe I obſerv'd all the Spring-time, that in moſt Places, that outſide Row which was neareſt to the middle Row, was leſs than the other

(1) A Wheat Plant, that is not planted early, ſends out no Root above the Grain before the Spring; and is nouriſh'd all the Winter by a Single Thread, proceeding from the Grain up to the Surface of the Ground.

(2) Becauſe the Worms can more eaſily find a Thread, that extends by its Length to Five or Six Inches Depth, than One which reaches but one Inch: and beſides, the Worms in Winter do not Inhabit very near the Surface of the Ground; and therefore alſo miſs the ſhort Threads, and meet with the long Ones.

(3) But the Difference betwixt a Foot and Fourteen Inches is ſo little, that 'tis ſcarce worth while to ſet a Drill on purpoſe; but to plant theſe Double Rows at the common Diſtance of Fourteen Inches, without altering the Drill. Or if the middle Row be planted, we can eaſily Chop it out along with the Weeds in the Spring, if we find it neceſſary.

out-

outside Row which was farther from it (1): And that, that least outside Row was only equal to the middle Row, the other much exceeding either of these, but yet there was not this Difference in all Places; because perhaps the Ho-Plow did not in these Places go so near to that Row, on the Side of the narrower Partition, as it did to the other outside Row.

I have for some Years planted my treble Rows at Seven Inches asunder, and find them succeed better than in wider Partitions: I observe that the better the Land is, either by Nature or Culture, the less Difference there is between the middle Row, and the Two outside Ones, both at Seven Inch and Eight Inch Partitions. The greatest Difficulty is to determine the most proper Width of Partitions; for if they are too Narrow, then all the Rows may suffer by Injuring one another, before the time wherein they are supply'd with fresh Nourishment from the Ho'd Intervals; and if the Partitions are too Wide, the middle Row will suffer by the too great Distance there is for its Roots to pass thorough, before they can enter the Intervals.

In a large poor Field, drill'd with Wheat in double Rows, the Partition not being confin'd, was unequal, and more unequal than is usual, even when the Partition is the Parting (2) Space, as it was here. After this Wheat was taken off, I observ'd by the strength of the Stubble, that in those Places where the Partition happen'd to be but Four or Five Inches, the Stubble was as thick, and as strong as where the Partition was Eighteen Inches, or more; but where the Rows came nearer together than Four or Five Inches, so as to appear like One single broad Row, the Stubble was smaller and weaker.

Hence it may be inferr'd, that where this Partition was widest, it gave no more Nourishment to the Two Rows (in Summer) than what was balanced by the greater Distance their Roots had to pass, before they could reach thorough to the opposite Intervals; and the wider this Partition is, the fewer of the Roots will pass thro' it; for the Roots going every Way from a Plant, somewhat like the *Radii* of a Circle from its Center, each Row, to each Plant, in its opposite Row being as the *Chord of an Arch*, the farther 'tis from each opposite Plant, or Center, the fewer of the *Radii*, or Roots, will be Intersected by that Row.

But as for the Rows that approach'd too near together, they were stunted at first, whilst they were Young; (and before they could have the Benefit of Hoing) for the Two Rows having then as it were, no Partition between them, could have but half the Nourishment they would have had, if the Partition had been wide enough to Half maintain them in their Infancy.

I have not as yet made a Drill on purpose for Quadruple Rows, but I make some of those Rows every Year with my Treble Drill, in this manner, *viz.* I take off the Fore-Hopper, and the Drill plants Fourteen Inches asunder, and then the Horse returning Back, goes on One of these Two Rows, and plants One more Row, betwixt the other Two, and One on the Outside, this makes a Quadruple Row; but then its Partitions are always Uneven, which gives a much better Direction how wide to make the Partitions, than if they were Even; for the farther these Two middle Rows are from One another, the nearer they are to the outside Rows, and the wider is the middle Partition; but the nearer the middle Rows are to One another, the farther they must be from the outside Rows. In this last Case I observe, that the Two middle Rows,

(1) This Observation was before I planted my Rows on High Ridges.

(2) The Parting Space is that Distance which the Drill leaves betwixt the Row it plants in going one Way, and that Row which it makes in returning back; this Distance cannot be supposed to be so exactly Equal in all Places, as those Distances which are confin'd, as being made betwixt the Shares of the Drill; for when the Drill has Two Shares, the Space or Distance betwixt them cannot vary.

when

when very near together, Weigh less than the One Middle Row on a Ridge of equal Height next adjoining; but in the other Case, when the middle Rows are Nearer, *viz.* at the Distance of Six Inches, from the Outsides, their produce is much larger than One Middle Row. Hence I conclude, that Quadruple Rows should have Six Inches Partitions, the Ridges rais'd High on good Ground well Pulveriz'd, to keep the Plants from being stunted when young; and the Land should be made pretty clean from Weeds.

These Three Partitions being only Eighteen Inches, will not occasion ~~any~~ greater Breadth of Ridges than Treble Rows, which have only Two Partitions.

Neither of the Two Middle Rows in a Quadruple Row, planted on the Level, is so good as the One Middle Row in a Treble Row, the Partitions in both being Seven Inches; and there can be no other Reason for that Difference, but that the One Middle Row has only One Partition, and One Row to pass through on each Side of it, before its Roots reach into the Two Intervals; but each of the Two Middle Rows have Two Partitions, and Two Rows on One Side to pass, e'er they reach the Interval on that Side; so that the Single-middle Row has the Benefit of Two Intervals, and each of the Double-middle Rows has only the Benefit of One Interval.

This Difference is also a Proof, that the Middle Rows do receive Nourishment from the Intervals, for else the One Middle Row, and each of the Two would be all Equal.

If by the Shallowness of the Soil, the Narrowness of the Plow, or by any other Cause, the Furrows are too Small to raise the Ridges High enough at Once, you must raise them Higher at Twice plowing; or else expect that the Middle Row will be the less, for want of more Pasture underneath it; because it must have Narrow Partitions, that it may be the nearer to the Intervals, and therefore the Pasture that is wanting (in the Partitions on each Side) cannot be supply'd but from below, until the Roots reach the Intervals.

The Middle Row must not be too Numerous in Plants; for then they will be the weaker, and less able to send out their Roots into the Intervals, early in the Spring; and indeed if the Outside Rows are too thick in Plants, they will rob the Middle Row the more when young; and afterwards their Roots will form the thicker Hedges, to obstruct those of the Middle Row from passing so easily out of the Partitions. I remember, that the Roots of my Row that I found had reach'd the Interval ~~of~~ Eighteen Inches Distance (which was then the full Height of the Plants) having first pass'd through another Row in their way, both these Rows were Thin of Plants; planted late, the Land made very fine, being a Friable Soil, all which made some little amends for the want of Ridges; this Land being planted upon the Level.

But yet I always find that Ridges, by the Advantages they have above Land that is Level, do (*cæteris paribus*) bring the best Crop, and are more easily managed (1).

June 19. 1731. I could never until this Year, bring my Middle Rows to be any thing near equal to the Outside Rows, but now I have done it, both in the Treble and Quadruple.

The Earth was all thrown out of the Middle of the Intervals before last Harvest, being first well pulveriz'd; then some time after Harvest, this Earth when

(1) 'Tis no small Advantage in this Management, that whether the Veering or the Henting be left in the Interval by the Ho-plow, all the Furrows in a whole Field lie continually open; so that the Master cannot be Cheated by his Plowmen, who might otherwise perswade him they plow'd deep when they plow Shallow. But in common Plowing, all the Furrows may be Shallow, except the last Two of every Ridge, which has perhaps Forty Furrows. Thirty-Eight of which lying always Cover'd, 'tis not easy to know how deep they are plow'd; And of all the Villanies of English Plow-Servants, This Trick of Plowing too Shallow, has Undone the most Farmers.

dry,

dry, was raised up to a pretty high Ridge, in the Middle of each Interval, from whence it was taken; and when the Weather had made it sufficiently moist, the Wheat was Drill'd thereon, with Seven Inch Partitions: This Wheat Flourish'd all the Winter and Spring, and the Middle Rows seem equal to the Outside Rows, by their Colour and Height, both in the Treble and Quadruple, all being much Stronger than the adjoining Sown Crops, tho' on Dung'd Fallows Four Times Plow'd, and mine being without Dung for many Years past.

The deep pulveriz'd Mould keeps the Plants Strong in the Winter and Spring, which enables the Middle Row to send out its Roots the more vigorously through the Roots of the Outside Rows; which Rows, if they were on shallow Mould, would bar in the Roots of the Middle Row, because the Roots are thickest near the Stems.

When the Plants of the Middle Row are too numerous for the Pasture of the Partitions, for want of a sufficient Depth of pulveriz'd Earth, they are weak and unable to send out their Roots vigorously enough, to reach the Intervals in time; also when the Plants of the Outer Row are too numerous on a shallow Mould, the Roots of these, which are always thickest near the Bottom of the Stems, make a *Septum* or Hedge betwixt the Roots of the Middle (or Inner) Row and the Interval, this very much obstructs their Passage; but when the pulveriz'd Mould is deep under the Outside Row, then the Roots of it are thinner below, and admit the Roots of the Middle Row to pass through among and between them there.

But if the Ho-Plow does not at the First Hoing go deep and near to the Rows, the subsided Earth will, especially in Strong Land, be as a Wall to confine the Roots of all the Rows from entering the Interval in the Spring and Summer, which is the Time they require most Nourishment from it.

Experience has shewn me this Year, that this is the Reason that the Middle Row falls short of, or equals the Outside Row; for in about Sixty Acres of Wheat I now have near Ripe, there is not one Row whether Treble or Quadruple, wherein the Middle Row (or Rows) do not succeed according as they are managed, by the one or the other Method, *viz.* where any Middle (or Inner) Row has a competent Number of Plants, standing on a competent Thickness of sufficiently well pulveriz'd Earth, and its Outside Row the same whereunto the Ho-Plow has went deep and very near, such Middle Row equals the Outside Row; but where ever any of these Circumstances are wanting, the Middle Row falls short more or less in proportion, as more or fewer of them are wanting. The Middle Row having more Pasture underneath it, may stand the nearer to the Outside Rows, without being stunted in the Winter or Spring, and therefore may be as well and better Nourish'd by Seven Inch Partitions, than by those much wider and thinner, tho' equally pulveriz'd; and then being of equal Strength, will send out its Roots the sooner into the Intervals, by how much it stands nearer to them. Besides, I find that Seven Inch Partitions may be Hand-Ho'd early in the Spring, and the Rows being so near together, prevent the Weeds from thriving in the Partitions when they are not Ho'd; and when Poppies do come in them, they always thrust out their Heads into the Intervals for Air, and may be very easily pull'd out.

The First Hoing is perform'd by turning a Furrow from the Row.

We are not so exact as to the Weather in the First Hoing; for if the Earth be wet, the Ho-Plow may go the nearer to the Row, without burying the Wheat; and the Frost of the Winter will pulverize that Part of the Furrow, which is to be thrown to the Wheat in the Spring, altho' it was Ho'd wet.

Neither is it necessary to be very exact as to Time, but it must never be 'till the

the Wheat has more than One Blade; and it may be soon enough, when it has Four or Five Leaves, so that its done before, or in the Beginning of Winter.

The greatest Fault you can commit in Hoing, is the First Time, when the Furrow is turn'd from the Row, not to go near enough to it, nor deep enough. You cannot then go too near it, unless you Plow it out, or Bury it with Mould, and do not uncover it; nor too deep, unless you go below the Staple of the Ground.

Servants are apt to Hoe too far from the Rows, going backwards and forwards, in the middle of the Intervals, without coming near the Rows; this loses most of the Benefit of Hoing; and is very injurious to the present Crop, and also to the Two succeeding Crops; for then there will be a Deficiency of pulveriz'd Earth; and no Body can suppose, that the Ho'd Earth can be of any Benefit to the Rows, before the Roots reach into it; and when 'tis far off, few of the Roots reach it at all, and those that do reach, come there too late to bring the Plants to their full Perfection: therefore if the First Furrow was not Near enough, nor Deep enough, plow a Second Furrow at the Bottom of the Former, which will go Deeper than the first, and break the Earth more; besides taking away from the Rows such unmov'd Ground, which the First plowing may possibly have miss'd. If this can't be conveniently done soon after the First Hoing, do it before the Ridge is turn'd back in the Spring.

Always leave the Furrows turn'd up, to make Ridges (1) in the middle of the Intervals during the Winter; and then the hollow Furrows, or Trenches next the Rows, being enrich'd by the Frost (2) and Rains (3), the Wheat will have the Benefit of them earlier in the Spring, than if the Trenches had been left open in the middle of the Intervals.

The Outside Rows of Wheat, from which the Earth is Ho'd off, before or in the Beginning of Winter, and left almost bare 'till the Spring, One would think should suffer by the Frost coming so near them (4), or for want of Pasture, but it appears to be quite contrary; for where the Hoe has gone nearest to a Row, its Plants thrive best: The Earth, which the Frost hath Pulveriz'd, being within the Reach of the Young short Roots, on that side of the Row,

(1) Tho' the Ridge in the middle of the Interval should, for want of sufficient Mould or otherwise, be too Low to give Shelter, yet there is generally some Earth falls to the Left of the Ho-plow, and lodges upon that part which is left on the Outside of the Row; which, notwithstanding that part be very Narrow (as suppose Two, or Three Inches) yet a small Quantity of Earth laying thereon, so near to the Outside Row, gives an extraordinary Shelter to the young Wheat Plants that grow in it.

Shelter is a great Benefit to Wheat, but yet Nourishment is more; for in the Winter I see the Wheat Plants upon the most exposed part of the Ridge Flourish, when single Plants in the Bottom of the Furrow are in a very poor languishing Condition, without any Annoyance of Water, they being upon a Chalk Bottom.

(2) Frost, if it does not Kill the Wheat, is of great Benefit to it; Water or Moisture when it is Frozen in the Earth, takes up more Room than in its natural State; this swelling of the Ice (which is Water congeal'd) must move and break the Earth wherewith it is mixt; and when it Thaws, the Earth is left hollow and open, which is a kind of Hoing to it. This Benefit is done chiefly to, and near the Surface; consequently the more Surface there is by the Unevenness of the Land, the more Advantage the Soil has from the Frost.

This is another very great Use of the Ridge left in the Middle of the Interval during the Winter; because that Ridge and its Two Furrows contain Four Times as much Surface as when Level. This thus pulveriz'd Surface turn'd in, in the Spring-Hoing, enriches the Earth, in proportion to its Encrease of internal Superficies, and likewise proportionably nourishes the Plants, whose Roots enter it; and that part of it wherein they do not enter, must remain more enrich'd for the next Crop, than if the Soil had remained level all the Winter.

(3) It is a Vulgar Error, that the Winter Rains do not Enrich the Earth, and is only thought so, because we do not see the Effect of them upon Vegetables, for lack of Heat in that Season. But some Farmers have frequently observ'd, that One Half of a Ground plow'd up just before Winter, has produc'd a Crop of Barley as much better than the other part Plow'd up at the End of Winter, as is the Difference of a Dunging, even when there has been very little Frost.

(4) In very light Land, perhaps we must not Hoe quite so near to the Rows of Wheat, as in strong Land, for fear the Winter should lay the Roots bare, and expose them too much to the Cold; but then we may be sure that in this Case, the Roots will reach the Interval, at a greater distance, than in strong Land; yet such very light Land is not proper for Wheat.

 from

from the Top to the Bottom of the Trench, Nourishes them at First, and before the Plants have much exhausted this, as they grow larger in the Spring, the Ridge from the Middle of the Interval is thrown to them, having a perfectly unexhausted Pasture, to supply their increasing Bulk with more Nourishment.

The Row standing as it were on the Brink of this almost perpendicular Ditch, the Water runs off quickly, or doth not enter but a very little way into this steep Side; so that the Earth at the Plants being dry, the Frost doth not reach quite to all their Roots to hurt them, tho' the Distance from the Air to the Roots be very short: and Dry Earth doth not Freeze as Wet doth, neither is this Ditch much expos'd to the cold Winds.

The Spring-Hoing is perform'd after the great Frosts are past, and when the Weather will allow it: and then turn (1) the Ridge from (2) the Middle of the Interval, to the Rows on each side, by Two Furrows as near as can be, without covering the Wheat; in doing which have Regard to the Row only, without looking at the Middle of the Interval; for 'tis no matter if a little Earth be left there, the next Hoing or the next save One (3) will move it.

As to how many Times Wheat is to be Ho'd in the Summer, after this Spring Operation, it depends upon the Circumstances (4) and Condition of the Land (5) and Weather; (6) but be the Season as it will, never suffer the Weeds to grow High, nor let any unmov'd Earth lie in the Middle of the Intervals long enough to grow Hard; neither plow deep near the Rows in the Summer, when the Plants are Large (7), but as Deep in the middle of the Intervals as the Staple will allow; turning the Earth towards the Wheat, especially at the last Hoing, so as to leave a Deep wide Trench in the Middle of each Interval.

We Augment our Wheat-Crops Four Ways; not in Number of Plants, but in Stalks, Ears, and Grains.

The First is, by increasing the Number of Stalks from One, Two or Three, to Thirty or Forty to a Plant, in Ordinary Field Land.

And we Augment the Crop, by bringing up all the Stalks into Ears, which is the Second Way; for if it be diligently Observ'd, we shall find that not Half (8) the Stalks of Sown Wheat come into Ear.

I saw an Experiment of this in Rows of Wheat that were equally Poor, One of these Rows was encreased (9) so much, as to produce more Grains than

(1) 'Tis an Arrant Mistake of the Vulgar, when they imagine that the immediate Benefit of fresh Earth to Plants, is from that part which remains uppermost; for 'tis from Turning the Impregnated pulveriz'd side downwards, to be fed on by the Roots that gives the *Pabulum*, or Nourishment of the Fresh Earth to Plants, the other side being Turn'd upwards, becomes Impregnate also in a little Time.

(2) But Note, that when we see Weeds coming up near the Row in the Spring, we Plow again from the Rows (and sometimes can plow within One Inch of the Row) before we Turn down the Mould, from the Middle of the Interval.

(3) If at the next Hoing we Turn another Furrow towards the Row (which is seldom done) then 'tis the next that moves the remaining Earth, left in the Middle of the Interval: but if the next Hoing be from the Row (as it generally is) then that covers the Middle of the Interval, and then 'tis the next Hoing after that, that Turns all the Earth clean out of the Middle of the Interval toward the Rows.

(4) If the Land was not sufficiently Till'd or Ho'd in the precedent Year, it will require the more Hoings in the following Year.

(5) The Poorer the Land is, the more Hoings should it have.

(6) A wet Summer may prevent some of the Hoings, that we should perform in a dry Summer.

(7) Our Hoing deep near the Plants when small, breaks off only the Ends of the Roots; but after the Roots are spread far in the Interval, the greatest Part of them being then on the Right-hand Side of the Ho-Plow, might hold fast on that Side, and not be drawn out, and then the whole Roots would be broken off close to the Bodies of the Plants; therefore at the Second deep Hoing, that turns a Furrow from the Row in the Summer, we go about Four or Six Inches farther off from the Row than the Time before; but we go nearer or farther off, according to the Distance of Time between those Two Hoings: Yet we may Hoe *shallow* near to the Plants at any Time, without Injury to their Roots, but on the contrary, it will be Advantageous to them.

(8) If a square Yard of sown Wheat be mark'd out, and the Stalks thereon Number'd in the Spring, it will be found, that Nine Parts in Ten are missing at Harvest.

(9) These Rows were Drill'd a Foot asunder not Ho'd, and were by the Shallowness and Wetness of the Soil, very Poor in the Spring; and then, by pouring Urine to the Bottom of this Row, it was so vastly encreased above the rest.

Ten

Ten of the Other, by bringing up more of its Stalks into Ears, and also by Augmenting its Ears to a much greater Bigness, which is the Third Way; for whatever *Varro* means by saying, that the Ears remain Fifteen Days in *Vaginis*, 'tis pretty plain that the Ears are form'd together with the Stalks, and will be very Large or very Small, in Proportion to the Nourishment given them.

The Last and Fourth Way of Augmenting the Produce of Wheat Plants, is by causing them to have Large and Plump Grains in the Ears; and this can no way be so effectually done, as by late Hoing, especially just after the Wheat is gone out of the Blossom, and when such Ho'd Grains weigh Double the Weight of the same Number of Unho'd, (which they frequently will) tho' the Number of Grains in the Ho'd are only equal, yet the Ho'd Crop must be double.

Thus by encreasing the Number of Stalks (1), bringing more of them up into Ear (2), making the Ears larger (3), and the Grain plumper and fuller of Flour (4), the Hoing Method makes a greater Crop from a Tenth (5) Part of the Plants, ~~then~~ the Sowing Method can.

All these Advantages will be lost by those Drillers, who do not overcome the unreasonable Prejudices of the Unexperienc'd, concerning the Width of Intervals.

In wide Intervals, we can raise a good Crop with less Labour, less Seed, no Dung, no Fallow, but not without a competent Quantity of Earth, which is the least Expensive of any thing given to Corn: The Earth of a whole good Acre, being but about the Tenth Part of the Common Expence; and of indifferent Land, a Twentieth, and such I count that of Five Shillings and Six Pence *per* Acre.

The Crop enjoys all the Earth, for betwixt the last Hoing and the Harvest, there remains nothing but Space empty of Mould, in the Middle of the Intervals.

In our Five Foot (6) Intervals, 'tis not necessary that we keep the Roots from passing through all the Mould, (if the Wheat be of a proper Sort) for they will always leave a sufficient Pasture for a succeeding Crop, because 'tis impossible

(1) The same Plant that when poor sends out but Two or Three Tillers, would if well Nourish'd by the Hoe or otherwise, send up a Multitude of Tillers, as is seen in Ho'd Wheat and Sown Wheat.

(2) Mr. *Houghton* relates Eighty Ears on One single Plant of Wheat, and a greater Number has been counted lately in a Garden; those Eighty reckon'd to have Fifty Grains apiece, make an Encrease of Four Thousand Grains for one: but I have never found above Forty Ears from a single Plant in my Fields; yet there is no doubt, but that every Plant would produce as many as Mr *Houghton's* of the same sort, with the same Nourishment; But I should not desire any to be so prolifick in Stalks, lest they should fail of bringing such a Multitude of Ears to Perfection. The Four Hundred Ears, that I Number'd in a Yard, were not weigh'd, because they were told before Ripe, and the greatest Weight of Wheat that ever I had from a Yard, was the Product of about Two Hundred and Fifty Ears, and some of them were small.

(3) I have Number'd One Hundred and Nine Grains in One Ear of my Ho'd Cone-Wheat, of the Grey Sort: And One Ear of my Ho'd Lammas-Wheat has been measured to be Eight Inches long, which is Double to those of sown Wheat. I have some of these Ears now by me, almost as long, the longest being given away as a Rarity; and indeed 'tis not every Year that they grow to that Length, and 'tis always where the Plants are pretty Single. But there is no Year wherein One Ear of my Ho'd does not more than weigh Two of the sown Ears, taking a whole Sheaf of each together without Choosing. The Sheaves of the Ho'd are of a different Shape from the other; almost all the Ears of the Ho'd are at the Top of the Sheaf; but most of the other are situate at the lower part, or near the middle of the Sheaf.

(4) Seed Cone-Wheat, coming all out of the same Heap, planted all at the same Time, and on Land of the same sort adjoyning near together, the Wheat that was sown produc'd Grains so Small, and that which was Drill'd so very Large, that no Farmer or Wheat-Buyer would believe them to be of the same sort of Wheat, except those who knew it, which were many. One Grain of the Drill'd weigh'd Two of the Sown, and there was Twice the Chaff in an equal weight of the Sown, being both weigh'd before and after the Wheat was separated from the Chaff.

(5) But tho' a too great Number of Plants be upon many Accounts very Injurious to the Crop, yet 'tis best to have a competent Number; which yet needs not be so exact, but that we may expect a great Crop from Twenty, Forty, or Fifty Plants in a Yard of the Treble Row, if well managed.

(6) We call them Five Foot Intervals, tho' they are but Four Foot Ten Inches Broad; these being the Widest that we find are proper for Wheat; but it is not to be Imagined, that we can be so exact, to make our Ridges or Intervals to an Inch; Yet we make the Ridges as exact as we can with the Plow, and the Intervals as even as we can, by Guiding the Drill exactly on the middle of the Top of each Ridge.

for them to come into Contact with it all in One Year; but the more Pasture is made by frequent Hoing, the more will be left unexhausted.

'Tis an Objection, that great Part of those wide Intervals must be lost, because the Wheat Roots do not reach it; but as we generally turn the Mould towards the Row, at the last Hoings, there is no Part of it above Two Foot distant from even the Middle Row, and Seventeen Inches from either of the Outside Rows.

And I have plainly Prov'd, that the Roots of Cone-Wheat have reach'd Mould at Two Foot distance, after passing thorough another Row, at a Foot distance from it, the Plants being then but Eighteen Inches High, and but Half grown.

Farmers do not grudge to bestow Three or Four Pound in the Buying and Carriage of Dung for an Acre; but think themselves Undone, if they afford an extraordinary Eighteen Penyworth of Earth to the wide Intervals of an Acre; not considering that Earth is not only the Best, but also the Cheapest Entertainment that can be given to Plants: For at Five Shillings and Six Pence Rent, the whole Earth belonging to each of our Rows costs only Six Pence, *i. e.* a Peny for a Foot broad, and Six Hundred and Sixty Foot long; that being the Sixty-sixth Part of an Acre (1).

And if for constant annual Wheat Crops, you make Fewer than Eleven Rows on Four Perch Breadth, you will always encrease the Expence of Hoing; because then Two Furrows will not Hoe One of those Intervals, and you will also thereby lessen the Crops, but improve the Land more. And if you encrease that Number of Rows, you will thereby encrease every Expence; for there must be Two Furrows to Hoe a Narrow Interval, and an encrease of the Quantity of Seed, and the Labour in Uncovering, Weeding and Reaping, and also you will less improve the Land, and lessen the Crops after the first Year.

If the Intervals are Narrower in Deep Land, tho' there might be Mould enough in them, yet there would not be Room to pulverize it.

If Narrower in Shallow Land, tho' there were Room, yet there would not be Mould enough in them to be pulveriz'd.

The Horse-Hoe well apply'd, doth supply the Use of Dung and Fallow; but it cannot supply the Use of Earth, tho' it can infinitely encrease the Vegetable Pasture of it, by Pulverizing it, where it is in a reasonable Quantity; yet if the Intervals be so Narrow, that near all the Earth of them goes to make the Partitions raised at Top of the Ridges, there will be so little to be pulveriz'd, that you must return to Fallowing, and to the Dung-Cart, and to all the Old exorbitant Charges (2).

Eight Acres, Part of a Ground of Twenty Acres, Drill'd with Intervals of Three Foot and a Half, brought a good Crop; but the Second Year, not being Ho'd, the Crop was poor; and the Third Crop made that Land so Foul and Turffy, that 'twas forc'd to lie for a Fallow, there being no way to bring it into Tilth, without a Summer-plowing (3), when the rest of the same Piece, in wider Intervals, being constantly Ho'd, continu'd in good Tilth, and never fail'd to yield a good Crop, without missing one Year.

(1) But the Vulgar compute this Expence of a Foot Breadth of Ground, not only as of the Rent, as they ought, but as an Eleventh part of their Own usual Charges added to the Rent.

And there is Land enough in *England*, to be had at the Rent of Five Shillings and Six pence the Acre, that is very proper for Wheat in the Hoing-Husbandry.

(2) The Objections against these Wide Intervals, are only for saving a Peny worth or Two of Earth in each Row, or a few Groats worth of it in an Acre; by saving of which Earth, they may lose in the present and succeeding Crops, more Pounds.

(3) This Narrowness of the Intervals, if the Damage of it be rightly computed, wou'd amount to Half the Inheritance of the Land; and was occasioned by the Wilfulness of my Bailiff, who Drilling it upon the Level, ordered the Horse to be Guided Half a Yard within the Mark, because he Fancy'd the Intervals would be too wide, if he Follow'd my Directions.

In

In another Field, there is now a Sixth Crop of Wheat, in wide Intervals, very promising, tho' this Ground has had no Sort of Dung to any of these Crops, or in several Years before them: The last Year's Crop was the Fifth, and was the Best of the Five, tho' a Yard of the Row yielded but Eighteen Ounces and Three Quarters, and the Third Crop yielded Twenty Ounces Weight (1) of clean Wheat in the same Spot; but 'twas because the Spot, where the Twenty grew, was then a little Higher than the rest, which in Two Years became more equal, and the Thin Land was more deficient in that Third Crop, than the Thick Land exceeded the Thin in the Fifth Crop.

In the Thick the Ho-Plow went Deeper, and consequently raised more Pasture there; but then it went the Shallower in the Thin, and when the Land became of a more equal Depth the Fifth Year, the Plow and Ho-Plow went Deeper: All the Piece being taken together; for the Crop could be but in proportion to the different Pasture, allowing somewhat for the more or less Seasonableness of the Year.

If it should be demanded, from whence the Soil can be supply'd with Vegetable Matter, to answer what is carry'd off by these constant Crops of Wheat, that the Land be not consumed by them, Mr. *Bradley*, and his Correspondent would give a very ready Answer, by saying, that Vegetables are Nourish'd by Air; and that the Earth serves for little else, than to keep them fix'd and steady; therefore the Wheat receiving its Augment from the Air, could not consume any part of the Earth: This would be an easy good Solution, were it possible to be True.

The Soil in this our Case cannot be supply'd in Substance, but from the Atmosphere. The Earth which the Rain brings can do it alone, if it fall in great Quantity; for by Water 'tis plain, the Earth which nourish'd *Helmont*'s Tree was supply'd; for the Tin-Cover of the Box wherein it stood, prevented the Dews from entering.

Dews must add very much to the Land, thus continually Till'd and Ho'd; for they are more heavily charged with Terrestrial Matter, than Rain is, which appears from their forcing a Descent through the Air, when 'tis strong enough to buoy up the Clouds from falling into Rain: And Dew, when kept in a Vessel long enough to putrify, leaves a greater Quantity of Black Matter at the Bottom of the Vessel, than Rain-Water does in a Vessel of the same Bigness, fill'd with it 'till putrify'd.

Dews at Land, I suppose are first exhal'd from Rivers and moist Lands, and from the Expirations of Vegetables; most of the Dew that falls on it is re-exhal'd from untill'd Land; but most of that which falls on well Till'd or well Ho'd Land, remains therein unexhal'd; so that the Untill'd Ground helps by that Means, to Enrich and Augment the Till'd, contrary to that of *Virgil: Nec nulla interea est Inaratæ gratia Terræ*: For if an Acre be Till'd Two Years together without Sowing, it will become Richer by that Tillage, than by lying Unplow'd Four Years, which may be easily prov'd by Experience (2).

(1) Wheat before Harvest, standing in Rows with Wide Intervals betwixt them, may not seem to the Eye to equal a Crop of Half the Bigness dispers'd all over the Land, when sown in the common Manner; and yet there is more Deceit in the Appearance of those different Crops, whilst they are Young, and in Grass; we should therefore not Judge of them then by our Imagination, but as we do of the Sun and Moon nigh the Horizon, *viz.* by our Reason.

Imagination often deceives us, by Arguments False, or Precarious; but Reason leads us to Demonstration, by Weights and Measures. Yet this Prejudice will Vanish at Harvest before Weighing; for then all those Wide Intervals that were bare, will be Cover'd with Large Ears interfereing to Hide them quite, and make a finer Appearance than a sown Crop. But 'tis observ'd, that the Cone-Wheat makes the finest shew when you look on it Length-Ways of the Rows, both at Harvest, and a considerable time before Harvest.

(2) *Non igitur Fatigatione, quemadmodum plurimi crediderunt,* 'Nec Senio, *sed nostra scilicet* Inertia *minus benigne nobis arva Respondent.* Col. Lib. 11. Cap. 1.

But

But then as to Rain, the Sea being Larger than all the Land (and its Waters by their Motion becoming replete with Terrestrial Matter) 'tis not unlikely that more Vapour is rais'd from One Acre of Sea, than from One Hundred Acres of Land. Hence 'tis very probable, that Islands are continually Gaining from the Deep, by means of Rain, which that Vapour (breaking against Mountains) produces.

Some have been so curious as to Compute the Quantity of Rain, that falls Yearly in some Places in *England*, by a Contrivance of a Vessel to receive it; and 'tis found in One of the Driest Places, far from the Sea, to be Fourteen Inches Deep, in the Compass of a Year; in some Places much more, *viz.* At *Paris* Nineteen Inches; in *Lancashire* Mr. *Townley* found, by a long continu'd Series of Observations, that there falls above Forty Inches of Water in a Year's Time.

Could we as easily Compute the true Quantity of Earth in Rain-Water, as the Quantity of Water is Computed, we might perhaps find it to answer the Quantity of Earth taken off from our Ho'd Soil annually by the Wheat.

But if Land sown with Wheat be not Ho'd, its Surface is soon Incrustate, and then much of this Water, with its Contents runs off, and returns to the Sea, without entering that Ground; and in Summer, a great deal of what remains is exhal'd by the Sun, and rais'd by the Wind, both in Summer and Winter.

Some there are who think it a fatal Objection, that the more an Interval is Ho'd, the more Weeds will grow in it; and that the Hoe can produce, or (as they say) breed in it as many Weeds in One Summer, as would have come thereon in Ten Years by the Old Husbandry. But by this Objection they only maintain, that the Hoe can destroy as many Weeds in One Summer, as the Old Husbandry can in Ten Years.

And they might add, that since all Weeds that grow where the Hoe comes, are Kill'd before they Seed, and that few of those which grow in the Old Husbandry, are Kill'd (1) before their Seed be ripe and shed; these Objectors will be forc'd to allow, that Our Husbandry will lessen a Stock of Weeds more in One Summer, than Theirs can do to the World's End; unless they believe the Equivocal Generation of Weeds, than which Opinion nothing can be more Absurd.

Some object against my Method of weighing a Yard, or a Perch in Length of a Row, saying, this does not determine the Produce of a whole Field.

I answer, that they judge right, if the Produce of the whole Field be not of equal Goodness; but if it be not, it must be because one Part of the Field is richer, or differently managed from the other Part: For the same Causes that produce Twenty Ounces of clean Wheat upon one Yard, must produce the same Quantity upon every Yard of a Million of Acres.

When the Crop of half a Field is spoil'd by Sheep, not Ho'd at all, or improperly, it would be ridiculous to Compute the whole Field together for an Experiment. We might indeed weigh the Poorest, to prove the difference of the one from the other, to try (as they sometimes seem to do) how poor a Crop we can raise; but my Design was to try how good a Crop I could raise with a Tenth Part of the common Expence.

And I have often weighed the Produce of the same Quantity of Ground (2) of all sorts of sown Wheat, both the best and the worst, but never have

(1) Weeds cannot be Kill'd before they Grow, but will lie Dormant, as they do in our Partitions, and in their sown Land; and while the Seeds are in the Ground, they are always ready to Grow at the first Opportunity; and will certainly break out at one Time or other; so that preventing their coming, is only like Healing up a Wound before it be cured.

(2) I allow Two Square Yards of their Crops to one Yard in Length of my Treble Row.

found

found any of the Sown equal to the best of my Drill'd; indeed we have none of the richest Land (1) in our Country within my reach, that being not above One Mile.

As a Yard in Length of my Treble Row of the Third successive Crop of Wheat, without Dung or Fallow, produced Twenty Ounces of Wheat; which, allowing Six Foot to the Ridge, is about Six Quarters (2) to an Acre; and allowing Seven Inches to each Partition, and Two Inches on each Outside, is in all Eighteen Inches of Ground to each Treble Row, and but just one Fourth Part of the Ridge. Now if in the Old Husbandry, the Crop was as good all over the Ground, as it was in these Eighteen Inches of the Treble Row, they must have Twenty-four Quarters to an Acre; but let them Dung whilst they can, they will scarce raise Twenty-four Gallons of Wheat the Third Year, on an Acre of Land of equal Goodness; and let them leave out their Dung, and add no more Tillage in lieu of it, and I believe they will not expect Three Quarters to an Acre, in all the Three Years put together.

The mean Price of Wheat, betwixt Dear and Cheap, is reckon'd Five Shillings a Bushel (3); and therefore an Acre that would produce every Year without any Expence, Eight Bushels, wou'd be thought an extraordinary Profitable Acre; but yet a Drill'd Acre, that produces Sixteen Bushels of Wheat, with the Expence of Ten or Fifteen Shillings, is above a Third Part more Profitable.

I don't know that I ever had an Acre yet, that was tolerably well manag'd in this Manner, but what Produc'd much more.

(1) I am sorry that this Farm, whereon I have only practis'd Horse-Hoing, being situate upon a Hill that consists of Chalk on one side, and Heath-Ground on the other, has been usually Noted for the poorest and shallowest Soil in the Neighbourhood.

(2) Eight Bushels make a Quarter.

(3) 'Tis commonly said, that a Farmer cannot Thrive, who for want of Money is obliged to sell his Wheat under Five Shillings a Bushel; but if he will sell it Dear, he must keep it when 'tis Cheap: And his Way of keeping it is in the Straw, using his best Contrivances to preserve it from the Mice.

The most secure Way of keeping a Great Quantity of Wheat, that ever I heard of, is by Drying it. When I lived in *Oxfordshire*, One of my nearest Neighbours was very expert in this, having Practis'd it for Great part of his Life: When Wheat was under Three Shillings a Bushel, he bought in the Markets as much of the middle Sort of Wheat as his Money would reach to Purchase; He often told me, that his Method was to Dry it upon a Hair-Cloth in a Malt-Kiln, with no other Fuel than clean Wheat Straw, never suffering it to have any stronger Heat than that of the Sun. The longest Time he ever let it remain in this Heat was Twelve Hours, and the shortest Time about Four Hours, the Damper the Wheat was, and the longer intended to be kept, the more Drying it requires; but how to distinguish nicely the Degrees of Dampness, and the Number of Hours proper for its Continuance upon the Kiln, he said was an Art impossible to be learnt by any other Means than by Practice. About Three or Four and Twenty Years ago, Wheat being at Twelve Shillings a Bushel, he had in his Granaries, as I was informed, Five Thousand Quarters of Dry'd Wheat, None of which cost him above Three Shillings a Bushel.

This Dry'd Wheat was Esteemed by the *London* Bakers, to Work better than any New Wheat that the Markets afforded. His Speculation which put him upon this Project was, that 'twas only the superfluous Moisture of the Grain that caus'd its Corruption, and made it liable to be eaten by the Wevil; and that when this Moisture was dry'd out, it might be kept Sweet and Good for many Years; and that the Effect of all Heat of the same Degree was the same, whether of the Straw or of the Sun.

As a Proof, he would shew that every Grain of his Wheat would grow after being kept Seven Years.

He was a most sincere Honest Yeoman, who from a small Substance he began with, left behind him about Forty Thousand Pound, the greatest Part whereof was acquired by this Drying Method.

Chap. XII. *Of SMUTTINESS.*

SMUTTINESS is when the Grains of Wheat instead of Flour are full of a black, stinking Powder; 'tis a Disease of Wheat, which I don't know is usual any where but in cold Northern Countries; for if it had been common in *Greece* or *Italy*, there would probably have been some Word to express it by, in those Languages, as well as there is for the *Blight*.

I take it to be caused by cold wet Summers, and I was confirm'd in this, by several Plants of Wheat, taken up when they were in Grass in the Spring, and plac'd in Troughs in my Chamber Window, with some of the Roots in Water, in exactly the same manner as the *Mints*, mark'd *H, H,* in Chapter of *Roots:* These Wheat Plants sent up several Ears each; but at Harvest, every Grain was Smutty; and I observ'd, none of the Ears ever sent out any Blossom; this Smuttiness could not be from any Moisture that descended upon it, but from the Earth, which always kept very Moist, as in the aforesaid Mint Experiment. The Wheat Plants in the Field, from whence these were taken, brought very few Smutty Grains, but brought much Larger Ears than these.

Whatsoever the Cause (1) be, there are but Two Remedies proposed; and those are *Brining*, and *Change of Seed.*

Brining of Wheat, to Cure or Prevent Smuttiness (as I have been credibly inform'd) was accidentally discover'd about Seventy Years ago, in the following manner, *viz.* A Ship-Load of Wheat was Sunk near *Bristol* in Autumn, and afterwards at Ebbs all taken up, after it had been soak'd in Sea-Water; but it being unfit for making of Bread, a Farmer Sow'd some of it in a Field, and when it was found to Grow very well, the whole Cargo was bought at a low Price by many Farmers, and all of it Sown in different Places. At the following Harvest, all the Wheat in *England* happen'd to be Smutty, except the Produce of this Brined Seed, and that was all Clean from Smuttiness. This Accident has been sufficient to justify the Practice of Brining ever since in all the adjacent Parts, and in most Places in *England.*

I knew Two Farmers, whose Farms lay intermix'd; they bought the same Seed together, from a very good Change of Land, and parted every Load betwixt them in the Field. The oldest Farmer believ'd Brining to be but a Fancy, and sow'd his Seed Unbrined; the other Brined all his Part of Seed, and had not a Smutty Ear in his Crop; but the old Farmer's Crop was very Smutty.

Wheat for Drilling must have no other Brine, than what is made of pure Salt; for if there be any Brine of Meat amongst it, the Grease will not suffer the Wheat to be Dry enough to be Drill'd.

If Seed-Wheat be soaked in Urine, it will not grow; or if only sprinkled with it, it will most of it die, unless Planted presently.

The most expeditious Way of Brining Wheat for the Drill, is, to make a very strong Brine; and when the Wheat is laid on a Heap, Sprinkle or Lave it therewith; then Turn it with a Shovel, and Lave on more Brine, Turn it again with a Shovel, until by many Repetitions of this, the Wheat be all equally Wet. Next Sift on Quick-Lime through a Sieve, Turn the Wheat with a Shovel, and Sift on more Lime, repeat this Sifting and Turning many times, which will make it Dry enough to be Drill'd immediately; and this has been found sufficient to preserve uninfected Wheat from the Smut in a bad Year, the Seed being Chang'd.

To Dry it, we use Quick-Lime (that is Unslack'd) which beaten to Powder and sifted thereon, confines the Brine to the Surfaces of the Grains, and suffers none of it to be exhaled by the Air: But when Lime has been long Slack'd, and is grown Weak, 'tis unfit for this Purpose.

Smutty Seed-Wheat tho' Brined, will produce a Smutty Crop, unless the Year prove very *favourable.*

For 'tis to be known, that favourable Years will Cure the Smut, as *unkind* Ones will Cause it: Else before Brining was used, and the bad Years had caused

(1) The largest Grain'd, plump, fat Wheat, is more liable to Smuttiness than small Grain'd thin Wheat.

all

all the Wheat in *England* to be Smutty, they must have brought their Seed from foreign Countries, or never have had any clean Wheat; therefore 'tis certain, that kind Years will Cure the Smut: 'Tis therefore to prevent the Injury of a bad Year, that we plant Clean Seed and well Brined.

But of the Two Remedies against Smuttiness, a proper Change of Seed, some think the most certain.

A very worthy Gentleman assures me, that since he has found out a Place that affords a Change of Seed proper to his Land, which is for these Ten Years past, he never had a Smutty Ear in any of his Crops (and he never Brines nor Limes it) tho' all other Wheat have been often Smutty throughout his Neighbourhood every wet Year, tho' Brined and Limed; he says the Person who furnishes him with this Seed, is very curious in Changing his Seed also every Year.

This gives a Suspicion, that our drowned Wheat at *Bristol* might possibly be Foreign, and then might not have been Smutty the next Year, tho' it had not been soak'd in the Sea-Water.

The Wheat sown by the Two Farmers aforemention'd might be from a good Change of Land, but the Seed not Changed the precedent Year; and then it might be no more infected, than what the Brine and Lime did cure.

To know what Changes are best to prevent Smuttiness of Wheat, we must consult the most Experienc'd; and they tell us, that the strong Clay Land is best to be sent to for Seed Wheat, whatever sort of Land it be to be sow'd upon; a White Clay is a good Change for a Red Clay, and a Red for a White. That from any Strong Land is better than from a Light Land, and the old Rhyme is, that *Sand* is a Change for no *Land.* But from whatever Land the Seed be taken, if it was not Changed the preceding Year, it may possibly be Infected, and then there may be Danger, tho' we have it immediately from never so proper a Soil.

The strongest Objection that has been yet made against constant annual Crops of Wheat is, that those Grains of the precedent Crop which happen to shed, and grow in the following Crop, will be in danger of Smuttiness, for want of changing those individual Seeds.

All I can say in Answer is, that during these Five Years, which is all the time I have had these annual Crops, this objected Inconvenience never has happen'd to me, even when a precedent Crop has been Smutty.

The Reason I take to be, that a Crop very early planted is not so apt to be Smutty; and if it be not planted early, the Grains that are shed grow, and are kill'd before, or at the Time of planting the next Crop. This saves a Crop following a Smutty one (which is always occasion'd by bad Seed, or bad Ordering) and when the former Crop was planted with good Seed well order'd, the shatter'd Grains of that may produce clean Wheat the Second Year; and 'tis very unlikely, that any Breed of these Grains should remain to grow in the Crop the Third Year.

Chap. XIII. *Of BLIGHT.*

THE Ancients did not take notice, that there was several Sorts of the Blight; neither did they enquire after their Causes, which unless they knew, it was not likely they should find any effectual Remedy to prevent. They call'd it in general by the Name of *Rubigo,* for the Likeness the blighted Straws and Leaves had to rusty Iron in Colour.

They

They thought it came all from Heaven, since they were ignorant of the natural Causes, *viz.* want of Nourishment in the Earth, *&c.*

Virgil was very sincere, where he had no hopes of any great Gain by Flattery; and tells the Husbandman in plain terms, that if his Corn be eaten with the Blight, he can give him no better Advice, than to comfort his Hunger by eating of Acorns; but has no Recipe to prescribe by way of Prevention.

Palladius, Lib. 1. *Tit.* 35. recites many Receipts against the Blight, and other Injuries, which were thought to come from Above. The chief Efficacy of them seems to consist in secret Contrivances, by Sympathies and Antipathies to fright the Clouds. And when Prayers and Sacrifices would not prevail with the *Cœlicolæ*, the Ancients, it seems, proceeded to Threatnings. *Cruentæ secures contra cœlum minaciter levantur.* They brandish'd bloody Axes against the Gods, as a Summons to Surrender, or else to expect no Quarter. But unless these Peasants had been better Engineers than the Giants, in Besieging Heaven, their Menaces must be vain. They acted like some modern Zealots, who take much the same Course with their Saints, as these Heathens did with their Gods: *viz.* When they are weary of Praying in vain to their Images, that are so Idle or Obstinate, as not to procure what their Votaries have a-mind to, they think to bring them into better Manners by Correction; and from Prayers fall to Whipping their Saints in Effigy. Yet 'tis to be fear'd, none of this Bigottry will cure the Blight.

Palladius thought also, with others of the Ancients, that Heaven was to be frighted with Red-Cloth, with the Feathers or Heart of an Owl, and a multitude of such ridiculous Scare-Crows, from spoiling the Fruits of the Fields and Gardens.

The Ancients having no rational Principles or Theory of *Agriculture*, plac'd their chief Confidence in Magical Charms and Enchantments; which he, who has the Curiosity and Patience to read, may find in the Title aforemention'd, in *Cato*, in *Varro*, (and even *Columella* is as fulsom as any of them) all written in very fine Language; which is most, if not all the Erudition, that can be acquir'd from the Greek and Latin Writers of Field-Husbandry in Verse and in Prose.

Wheat is Blighted at Two Seasons; First, when in the Blossom, and then its Generation is prevented, and many of the Husks are empty in the Ear, the Grains not being impregnated.

Secondly, Wheat is Blighted when the Grains are brought to the time of their Maturity, but are light and of little value for making of Bread; because they are not well fill'd with Flour.

The First cannot happen in *England* by the Frost, because the Winters do not suffer it to grow so much, as to come into Blossom before the Month of *June*; but it is long continual Rains that Rot or Chill the Blossoms, and prevent their Fertility. Yet this is what seldom happens to any great degree, and we are happy that it does not, since modern Credulity is not strong enough to rely on the Remedies prescribed by the Ancients; and we know of no other which are effectual against this sort of Blight. Wheat that grows in open Fields has some advantage from the Wind, that dislodges the Water sooner from the Ears, than it can do in shelter'd Places; and Lammas-Wheat does not hold the Drops of Rain so long as the Bearded (or Cone) Wheat, which receiv'd very great Damage by this sort of Blight in the Year 1725; the like never having been heard of before, I hope it may never happen again.

The Second Sort of Blight, *viz.* from light Ears, is, that which is most frequent and more general: This brings the greatest Scarcity of Wheat. The Cause is plainly want of Nourishment to perfect the Grain, by whatever means that want is occasion'd. Several

Several Accidents kill the Plants, or injure their Health, and then the Grains are not fill'd; as Lightning, the Effects whereof may be observ'd by the blackish Spots and Patches in Fields of Wheat, especially in such Years as have more of it than usual. Against this there is no defence; for the Ancients tell you the Giants found that even Mountains were not Thunder-Proof.

And yet *Columella, Lib.* x. *Pag.* 353. says,

'*Utque Jovis magni prohiberet fulmina Parchon,*
'*Sæpe suas Sedes percinxit vitibus albis.*
Ibid.

——————————*Salutis*
'*Ipsa novas artes varia experientia rerum,*
'*Et Labor ostendit miseris, ususque magister*
'*Tradidit agricolis, ventos sedare furentes,*
'*Et Tempestatem Thuscis advertere sacris.*
'*Hinc mala Rubigo virideis ne torreat Herbas,*
'*Sanguine lactentis catuli placatur, & extis.*

What Credit can be given to the fine words of these Ancients, who joyn all together in Verse and in Prose to impose upon Posterity, even in Matters of Fact; and, by the most elegant Expressions, compose a Theory of Agriculture without Reason or Truth? They were most accomplish'd Masters of the Art of Cheating themselves and us with Sound instead of Sence.

The other Causes of the Blight which are most general, and do the most damage, may in some measure be prevented.

One Cause is the lodging or falling of Corn, for then the Stalks are broken near the Ground, whereby many of the Vessels are so press'd, that the Juices cannot pass them, and then the free Circulation is hinder'd, the Chyle cannot mount in sufficient Quantity to be purify'd and turn'd into Sap; the defect whereof makes the Plants become languid, and only just able to live; they have Strength enough to linger on to the time of their Period, as in very Old Age, but not to bring their Fruit, which is the Grain, to its natural Bulk, nor to fill it with Flour; and the sooner the Stalks fall, the less and thinner the Grain will be.

Hence it often happens, that when Tillage, Dung, and good Land have brought a Crop of Wheat, that in the Months of *April* and *May* promise to yield the Owner Five or Six Quarters on an Acre, then in *June* it falls down, and scarce affords Five or Six Bushels; and that perhaps is so Thin and Lank, that the Expence of Reaping and Thrashing it may over-balance its Value.

That the falling down of Wheat does cause the Ruin of the Crop, is well known; but what causes it to fall is not so plain.

And without knowing the true Causes, 'tis not likely that a Remedy should be found against the Disease.

I take this Weakness of the Stalks, which occasions their falling, to proceed from want of Nourishment, want of Air, want of the Sun's Rays, or of all Three.

One Argument, that it lodges for want of Nourishment is, that a rich Acre has maintain'd a Crop of Five Quarters standing, when another poorer Acre was not able to support a Crop from falling, which was but large enough to have brought Three Quarters, if it had stood; and this in the same Year, and on the same Situation. And 'tis very plain, that if one Acre was twice as rich as the other, it must be able to nourish Five Quarters better than the other could nourish Three Quarters.

Air is necessary to the Life and Health of all Plants, tho' in very different degrees: Aquaticks, which live under Water, are content with as little Air as their Companions, the Fishes. S But

But Wheat, being a terrestrial Plant (tho' in Winter it will live many Days under Water, whilst the slow motion of its Sap gives it little or no encrease) requires a free open Air, and does not succeed so well in low sheltery Places, as upon higher and opener Situations; where the Air has a greater motion, and can more easily carry off the Recrements from the Leaves, after it has shaken off the Dews and Rains, which would otherwise suffocate the Plants; and therefore the Leaves are made so susceptible of motion from the Air, which frees them from the Dews, that would stop in the Recrements at the *Vesiculæ* of the Leaves, but shaken down will nourish the Plants at the Roots: The want of this Motion weakning the Wheat, 'tis (as Animals in the like sickly case are) the more unable to stand, and the more liable to be press'd down by the weight of Rain-Water, and more unable to rise up again when down: All which Evils are remov'd by the free Motion of the Air, which shakes off both Dews and Rains, and thus contributes to prevent the falling (or lodging) of Wheat.

A great quantity also of the Sun's Rays is necessary to keep Wheat Strong and in Health; and in *Egypt* and other hot Countries, it is not so apt to fall, as it is when sown in Northern Climates, tho' the Produce of the South be the greatest.

It may be observ'd, that every Leaf is inserted into a sort of Knot, which probably delivers out the Sap to be depurated at the *Vesiculæ* of the Leaves, and then receives it back again for the Nourishment of the Plant, doing for that purpose the office of an Heart: But the Sun with his Rays supplies the part of Pulse, to keep the Sap in motion, and carry on its Circulation, instead of the Heart's *Systole* and *Diastole*. Wheat being doubtless originally a Native of a hot Country, requires by its Constitution a considerable degree of Heat to bring it to Perfection; and if much of that degree be wanting, the Wheat will be the weaker, and when the Solar Rays cannot reach the lower parts of the Stalks, the lowest Leaves and Knots cannot do their office; for which reason the Chyle must mount higher before it be made into Sap, and there must be then a greater mixture of crude Chyle next to the Ground, as by the white Colour it appears. By this means that part, which if it had a due share of the Sun's Influence, would be harden'd like a Bone or Spring, for the support of the Stalks; but for lack of that, becomes more like to a Cartilage, soft and weak, unable to sustain the weight of the bending Ear, which having its greatest *Impetus* against this part, which is most feeble to resist it, it yields and lets it fall to the Ground, and then the Grain will be Blighted.

There is also another cause of the Blight, and that is the Wheat's coming too late into Blossom; the usual time is the Beginning of *June*, and if it be later, the Days shorten so fast after the Solstice, that the Autumn of the Year hastening the Autumn of the Wheat's Life, the full Time of its Pregnancy (1) is not accomplish'd; and then its Fruit, which is the Grain, becomes as it were abortive, and not full grown. This time betwixt the Generation, Blossoming, and the Maturity of the Grain, is, or ought to be about Two Months.

Therefore 'tis advantageous to hasten what we can, the time of Blossoming, and to protract the time of Ripening: And 'tis observ'd, that the earliest sown Wheat generally escapes the Blight the best, because it comes first into Blossom.

(1) *Ut enim Mulieres habent ad Partum Dies certos, sic Arbores ac Fruges.* Varro, *Lib.* 1. *Cap.* 44.
Mense Maio, Florent sic; Frumenta & Ordeum & quæ sunt seminis singularis Octo diebus Florebunt, & deinde per Dies 40 grandescunt Flore deposito Usque ad Maturitatis eventum. Palladius, *Pag.* 114, 115.
Quindecim diebus esse in Vaginis, Quindecim florere, Quindecim exarescere, cum sit maturum Frumentum. Varro, *Lib* 1. *Cap.* 32
But the different Heat that there is in different Climates, may alter both the Time that Plants continue in Blossom, and the Time betwixt the Blossoming and the Ripening.

But

But it was quite otherwise, it seems, in that Climate where *Virgil* says,

'*Multi ante occasum Maiæ cœpere: sed illos*
'*Expectata seges vanis illusit aristis.*

This, I suppose, must be where the Winter's are so mild, that if Wheat were sown early, it might chance to Blossom before the Hazard of the nipping Winds were past; which often happen there towards *March*, to be the most piercing, and might destroy the tender Wheat Blossoms, and then the Ears must be empty. The Winters are so mild at *Messina*, as without art to produce Green Pease, Cauliflowers, Artichokes, *&c.* as good as we have them in Summer. Therefore Wheat cannot be kept back from Blossoming, as it is here by the Frost; and if their Wheat-Harvest in *Sicily* be about the 20th of *May*, (as I have been Inform'd) its time of Blossoming is Probably in the Beginning of *March*.

Of all the Errors in the First *Georgic* (which I think contains little else) *Virgil's* Remedy against the Blight seems the most Ridiculous.

'*Qui, ne gravidis procumbat* (1) *culmus aristis*
'*Luxuriem segetum tenerâ depascit in herbâ*
'*Cum primum sulcos æquant sata.*

And lest the Stem too feeble for the freight,
Shou'd scarce sustain the Head's unwieldy weight,
Sends in his feeding Flocks betimes t' invade
The rising Bulk of the luxuriant Blade;
E'er yet th' aspiring Off-spring of the Grain
O'ertops the Ridges of the furrow'd Plain. *Dryden.*

This indeed prevents the Blight, by doing what the Blight wou'd do, if the Wheat fell down, *i. e.* causes the Ears to be Light (2).

And we find that those, who practise this Method of feeding their Wheat with Sheep in the Spring, to prevent the lodging of it, have most commonly their Straw weak, and Ears light.

These *Virgilians*, instead of making the Stalks strong enough, to support heavy Ears, make the Ears light enough to be supported by weak Stalks. They know that heavy Ears make the greatest Crop, and yet they still hope to have it from light ones.

They cause the *Blight* by the very means they make use of to *cure* it.

This Feeding of Wheat much retards the time of its Blossoming, and that it may blossom early is one chief end of sowing it early, to prevent the Blight. But when it is Fed, what the Plants send up next is but a sort of second or latter Crop, which have longer to stand than the first would have required, and is always weaker than the first Crop would have been; and the longer time it has to continue on the Ground, the more Nourishment is required to maintain it; and yet, as has been shewn, the longer it has been sown, the more the Earth has lost of its Nourishment; and consequently, the Crop will be yet weaker and in more danger of the starving Blight.

(1) All the Injury that Ears receive by falling, is, that it makes them light, and lodg'd Ears are always Lighter than those of the same bigness which stand; therefore *Virgil* instead of *Gravidis* should have said *Levibus*, if he had a due regard to strict Truth, which alone could be of any Service to the Subject He then wrote of; But He plainly mistook the Cause of its falling, which is *Stalks weak at Bottom*. He blunder'd in the fall'n Wheat; whilst His Eyes and Thoughts were intently fix'd on the Sky, in order both to Learn there his Rules of Steering his Plow, and to find a Vacancy wherein to place the Conqueror of his own Country among the *Stars*.
(2) Heavy Ears never fall, if they did, that would not make them Light. Wheat falls sometimes whilst 'tis in Grass, and before it comes into Ear; so far are the Ears from causing it to fall.

Thus

Thus *Virgil's* Remedy seems here to be worse than the Disease (1).

The most effectual Remedy against the Blight, is that which removes all its Causes, (except such extraordinary ones as Lightning) as,

First, *Want of Nourishment.*

The Horse-Hoe will, in wide Intervals, give Wheat throughout all the Stages of its Life, as much Nourishment as the discreet Hoer pleases.

Secondly, *Want of Air.*

Air, being a fluid, moves most freely in a right or straight Line; for there the fewest of its parts meet with any resistance; as a straight River runs swifter than a Crooked one, from an equal Declivity; because more of the Water strikes against the Banks at the Turnings, and is there somewhat retarded; and the rest moving no faster than in the straight River, the whole Stream of the Crooked must be slower in its Course, than that of the straight River.

The Air cannot pass thro' sown Corn in a direct Line, because it must strike against, and go round every Plant, they standing all in the way of its course, which must stop its Current near the Earth.

And the Air amongst sown Corn, is like Water amongst Reeds or Osiers in the Side of a River, 'tis so stopp'd in its course, that it almost becomes an Eddy; and since Air is about Eight Hundred times lighter than Water, we may suppose its Current thro' the Corn is more easily retarded, especially near the Earth, where the Corn has occasion for the greatest quantity of Air to pass: For tho' the upper Part of the Wheat be not able to stop a slow Current of Air, yet it does so much raise even a swift one, as to throw it off from the Ground, and hinder it from reaching the lower parts of the Stalks, where the Air must therefore remain, in a manner, stagnant; and the Thicker the Wheat is, where it stands promiscuously, the less change of Air can it have, tho' the greater the Number of the Stalks is, the more fresh Air they must require.

But the confused manner in which the Plants of sown Wheat stand, is such, that they must all oppose the free entrance of Air amongst them, from whatever point of the Compass it comes.

Now it is quite otherwise with Wheat drill'd regularly with wide Intervals, for therein the Current of Air may pass freely, (like Water in a straight River where there is no Resistance) and Communicate its Nitre to the lower as well as upper Leaves, and carry off the Recrements they emit, not suffering the Plants to be weaken'd, as an Animal is, when his Lungs are forc'd to take back their own Expirations, if debarr'd from a sufficient supply of fresh untainted Air. And this benefit of fresh Air is plentifully and pretty equally distributed to every Row in a Field of Ho'd Wheat.

Thirdly, *Want of the Sun's Rays.*

Sown Wheat Plants, by their irregular Position, may be said to stand in one another's Light, for want of which they are apt to fall.

'Tis true the whole Field of Plants receive the same quantity of Sun-Beams amongst them, whether they stand confusedly, or in order; but there is a vast difference in the Distribution of them, for none or the very least share of Beams is obtain'd by those parts which need the greatest share, in the confused Plants. And when the Crural parts, that should support the whole Body of every Plant, are depriv'd of their due share of what is so necessary to strengthen them, the Plants (like Animals in the same case) are unable to Stand.

But in drill'd Wheat, where the Plants stand in a regular order, the Sun-Beams are more duly distributed to all Parts of the Plants in the Ranks; for

(1) I am sure, that whenever Sheep break into my drill'd Wheat, in the Spring, it lessens my Crop half, just as far as they eat the Rows.

which

which way soever the Rows are directed, if they be straight, the Rays must, sometime of the Day, fall on the Intervals, and be reflected by the Ground, whence the lower Parts of the Wheat Stalks must receive the greater share of Heat, being nearest to the Point of Incidence, having no Weeds to shadow them.

As to that Cause of the Blight, *viz.* the Wheat's dying before the full time of its Pregnancy be accomplish'd; the Hoe removes all the Objections against Planting early, and then it will Blossom the earlier: and it has visibly kept Wheat green a whole Week longer, than unho'd Wheat adjoining to it, planted the same Day.

The Ancients were perfect Masters of the Vine-Husbandry, which seems to have engross'd their rural Studies, that it did not allow them so much reflection, as to apply the use of those Methods to the Encrease of Bread, which they had discover'd to be most beneficial for the Encrease of Wine. One Method was to Hoe the Vines after they had blossom'd, in order to fill the Fruit, as in *Columella*, Lib. 4. Cap. 28. *Convenit tum crebris Fossionibus implere, nam fit uberior Pulverationibus.* And if what *Palladius* says, *Tit. ix.* be true of the Sarritions and Sarculations in the Month of *January*, and that if Beans do twice undergo that scratching Operation, they will produce much Fruit, and so large as to fill the Bushel almost as full when shal'd as unshal'd.

Faba si bis Sarculetur proficiet, & multum fructum & maximum afferet, ut ad mensuram Modii complendi Fresa propemodum sicut Integra respondeat.

This is to be done when Beans are four Fingers high, and Corn when it has four or five Leaves to a Plant; even then the Harrowing-work, tho' it tore up some of the Plants, yet it was observ'd to do good against the Blight.

Si siccas segetes sarculaveris, aliquid contra Rubiginem prastitisti, maxime si ordeum siccum sarrietur.

When the Ancients observ'd this, 'tis wonder they did not plant their Corn so as to be capable of receiving this Benefit in perfection. They might have imagin'd, that what was effectual against the Blight, when the Corn was in Grass, must in all probability, be much more effectual when in Ear.

But the most general Blight, that happens to Wheat in cold Climates, is caused by Insects, which (some think) are brought in the Air by an East-Wind accompany'd with moisture, a little before the Grain is filling with that Milky-Juice, which afterwards hardens into Flour. These Insects deposite their Eggs within the Outer Skin (or Rind) of the Stalks; and when the young ones are Hatched, they feed on the *Parenchyma*, and eat off many of the Vessels which should make and convey this Juice; and then the Grain will be more or less thin in proportion to the Number of Vessels eaten, and as the Insects happen to come earlier or later; for sometimes they come so late, that the Grain is sufficiently fill'd with the said Milky-Juice before the Vessels are eaten; and then, tho' the Straw appear thro' a Microscope to have its Vessels very much eaten and torn, and to be full of Black Spots (which Spots are nothing else but the Excrements of those young Insects) yet the Grain is Plump and not Blighted, there being an Observation, That the early sown Wheat generally escapes this Blight. And it has been seen, where one part of a Field is sown earlier than the other part, without any other difference than the time of sowing, that the Grain of the latest sown has been much blighted, and the Grain of the earlier has escaped the Blight, tho' the Straw of both were equally eaten by the Insects. Hence it may be inferr'd, that the Milk in the one had receiv'd all the Nourishment necessary to its due Consistence, before the Vessels were destroy'd; but in the other, the Vessels, which should have continued the supply of Nourishment for Thickening the Milk, being spoil'd before they have finish'd that Office, it remains

mains too Thin; and then the Grain, when it hardeneth, shrinks up and is Blighted; yet the Grain of one and the other are equally Plump until they become Hard; the difference therefore is only in the Thickness of the Milk, That in the Blighted being more Watry than the other.

The chief Argument to prove that these Insects are brought by an East-Wind, is, That the Wheat on the East-sides of Hedges are much Blighted, when that on the West-sides is not hurt; and as to the Objection, that they are bred in the Earth, and crawl thence up the Stalks of the Wheat, because some Land is much more subject to produce Blighted Wheat than other Land is, perhaps this difference may be chiefly owing to the different Situation of those Lands, as they are opposed to the *East* or to the *West*.

Another Cause why some Wheat is more Blighted than other Wheat on the same Land, is, the different Condition in which the Insects find it; for the Rind of that which is very strong and flourishing (1) is soft and tender; into this they can easily penetrate to lay their Eggs; but the Wheat that is Poor and Yellow, has a hard tough Skin (or Rind,) into which the Insects are not able to Bore, for the Intromission of their Eggs, and therefore can do it no mischief. It would be in vain to advise to prevent the Blight, by striving to make the Wheat Poor; for tho' Poverty may preserve Wheat from this Blight, as well as it does People from the Gout, yet that is a Remedy which few take willingly against either of these Diseases: But this I think might be possible to remedy it, if we could from the strongest Wheat take away so much Nourishment as to turn its Colour a little Yellowish just before the Insects come (2), which I suppose to be in *June*, after the Ear is out, or at least fully formed.

Yet this can only be done in wide Intervals, for unless the fine Earth can be thrust to some considerable Distance from the Roots after they are cut off, they will soon shoot out again and reach it, becoming more vigorous thereby.

In Dry Summers this Misfortune seldom happens, much Heat and very little Moisture being most agreeable to the Constitution of Wheat; for then its Rind is more Firm and Hard, as it is on the contrary made more soft and spongy by too much Moisture.

The most easy and sure Remedy that I have yet found against the Injury of these Insects, is to plant a sort of Wheat that is least liable to be hurt by them, *viz.* The *White-Cone* (or Bearded) *Wheat*, which has its Stalk or Straw like a Rush, not Hollow but full of Pith, (except near the lower part, and there 'tis very thick and strong) 'Tis probable it has Sap-Vessels that lie deeper, so as the young Insects cannot totally destroy them, as they do in other Wheat: for when the Straw has the Black Spots, which shew that the Insects have been there Bred, yet the Grain is Plump, when the Grey-Cone and Lammas Wheat mixt with it are Blighted. This difference might have been from the different times of Ripening, this being Ripe about a Week earlier than the Grey-Cone, and later than the Lammas: But its being planted together both early and late, and at all times of the Wheat-Seed-time, and this White-Cone always escaping with its Grain unhurt, is an Argument, That 'tis naturally fortify'd against the Injury of these Insects, which in Wet Summers are so pernicious to other sorts of Wheat; and I can impute it to no other Cause than the different Deepness of the Vessels, the Straw of other Wheat being very much Thinner and Hollow

(1) Some sort of Land is more subject to this Blight than others, in such, Lammas-Wheat must by no means be Drill'd Late and too Thin, least it should not Tiller till late in the Spring; and then, for want of a sufficient Quantity of Stalks to dispense with all the Nourishment rais'd by the Hoe, may become too vigorous and luxuriant, and be the more liable to the Injury of the Blight of Insects.

(2) Whether those Insects go, or where they reside, from the time of their Eating their way out of the Straw, until they return the next Year, I cannot learn.

from

from top to bottom, this having a small hollow at bottom, and there the Thickness betwixt the outer Skin and the Cavity is more than double to that in other sorts of Wheat; so that I imagine, the Insects reach only the outermost Vessels, and enough of the inner Vessels are left untouch'd to supply the Grain.

This Wheat makes very good Bread, if the Miller does not Grind it too small, or the Baker make his Dough too hard, it requiring to be made softer than that of other Flour.

A Bushel of this White-Cone-Wheat will make more Bread than a Bushel of Lammas, and of the same Goodness; but it gives a little Yellow Cast to the Bread.

Another sort of lodging Blight there is, which some Call *Moar-Loose*; and mostly happens on light Land; this is when the Earth sinking away from the Roots, leaves the bottom of the Stalk higher than the subsided Ground, and then the Plant having only these naked Roots to support it (for which they are too weak) falls down to the Earth. Loose

To Remedy this, Turn a shallow Furrow against the Rows, when they are strong enough to bear it; and when the Mould is very fine and dry; then the Motion of the Stalks by the Wind, will cause such Earth to run thorough the Rows, and settle about the Roots and cover them.

I have never seen any drill'd Wheat so much spoil'd by Falling, as sown Wheat sometimes is. The Drill'd never falls so close to the Ground, but that the Air enters into Hollows that are under it, and the Wind keeps the Ears in Motion. Notwithstanding all the Precaution that can be used, in some unseasonable Years Wheat will be Blighted: I have known such a general Blight, when some of my Lammas-Wheat, planted late and on blighting Land, was Blighted amongst the rest of my Neighbours, by the Insects; but the Grain of the Sow'd Wheat was vastly more Injured than that of the Drill'd: The former was so *light*, that the greatest part was blown away in Winnowing, and the remainder so *bad*, that it was not fit to make Bread: The Drill'd, made as good Bread, and had as much Flour in it, as the sow'd Wheat had, that was not Blighted; for the Grains of the Drill'd were much larger than those of the Sown; being form'd to have been Twice as Big as the Grains of Wheat generally are, had they not been Blighted.

Chap. XIV. *Of ST. FOIN.*

ST. *Foin*, from the Country we brought it from, is call'd *French Grass*; And for its long Continuance, some having lasted Forty Years, 'tis call'd *Everlasting Grass*, tho' it be not strictly a *Gramen*.

'Tis call'd in French, *Sain Foin*, i. e. *Sanum Fœnum*, from its quality of Wholesomness, beyond the other artificial Grasses, green and dry. 'Tis also call'd *Sanctum Fœnum*, Holy Hay.

'Tis a Plant so generally known to every Body (except a certain Author, who confounds it with *Medica*) that there is no need to give any formal Description of that Part of it which appears above Ground. It has many Red Flowers, sometimes leaving Ears five or six Inches long: I have measured Stalks, and found them above five Foot long, tho' they are commonly but about two Foot.

The Reason why *St. Foin* will, in poor Ground, make a Forty times greater

En-

Encreaſe than the natural Turf, is the prodigious Length (1) of its perpendicular Tap-Root; it is ſaid to deſcend Twenty or Thirty Foot. I have been inform'd by a Perſon of undoubted Credit, that he has broke off one of theſe Roots in a Pit, and meaſured the Part broken off, and found it Fourteen Foot.

This Tap-Root has alſo a multitude of very long Horizontal Roots at the upper Part thereof, which fill all the upper *Stratum*, or Staple of the Ground; and of Thouſands of *St. Foin* Roots I have ſeen taken up, I never found One that was without Horizontal Roots near the Surface, after One Summer's Growth; and do much wonder how Mr. *Kerkham* ſhould be ſo miſtaken, as to think they have none ſuch.

Alſo theſe Tap-Roots have the Horizontal ones all the way down; but as they deſcend, they are ſtill ſhorter and ſhorter, as the uppermoſt are always the longeſt.

Any dry Ground may be made to produce this noble Plant, be it never ſo poor; but the richeſt Soil will yield the moſt of it, and the beſt.

If you venture to plant it with the Drill, according to the Method wherein I have always had the beſt Succeſs; let the Land be well prepared before you plant it. The Seed if not well ordered will very little of it grow; therefore 'tis convenient to try it in the Manner mention'd in Chapter of *Hoing*; where are alſo Directions to find the proper Quantity and Depth to plant it at: I have obſerv'd, that the Heads of theſe Seeds are ſo large, and their Necks ſo weak (2), that if they lie much more than Half an Inch (3) deep, they are not able to riſe through the incumbent Mould; or if they are not Cover'd, they will be Malted (4). A Buſhel to an Acre is full Twenty Seeds to each ſquare Foot in all I try'd; but there is odds in the Largeneſs of it, which makes ſome difference in the Number.

The worſt Seaſons to plant it are the Beginning of Winter, and in the Drought of Summer: The beſt Seaſon is Early in the Spring.

'Tis the ſtronger when Planted alone, and when no other Crop is Sown with it (5).

(1) There is a Vulgar Opinion, That *St. Foin* will not ſucceed on any Land where there is not an under *Stratum* of Stone or Chalk, to ſtop the Roots from running deep, elſe they ſay the Plants ſpend themſelves in the Roots only, and cannot thrive in thoſe parts of them which are above the Ground. I am almoſt aſhamed to give an Anſwer to this.

'Tis certain that every Plant is nouriſhed from its Roots (as an Animal is by its Guts) and the more and larger Roots it has, the more Nouriſhment it receives, and Proſpers in Proportion to it. *St. Foin* always ſucceeds where its Roots run deep, and when it does not ſucceed, it never lives to have long Roots; neither can there ever be found a Plant of it, that lives ſo long as to root deep in a Soil that is improper for it. Therefore 'tis amazing to hear ſuch Reaſoning from Men.

An under *Stratum* of very ſtrong Clay or other Earth which holds Water, may make a Soil improper for it; becauſe the Water kills the Root, and never ſuffers it to grow to Perfection, or to attain to its natural Bulk. The beſt *St. Foin* that ever I ſaw, had nothing in the Soil to obſtruct the Roots, and it has been found to have Roots of a prodigious Depth.

(2) The Kernel or Seed, being much ſwollen in the Ground, Scall the Head; this when it reaches above the Ground, opens in the Middle, and is Formed into the Two Firſt Leaves; the Husk always remaining at the ſame Depth at which it is cover'd: the String that paſſes from the Husk to the Head, is the Neck; which, when by its too great Length 'tis unable to ſupport the Head 'till it reaches to the Air, riſes up and Doubles above it; and when it does ſo, the Head being turn'd with its Top downwards, never can riſe any higher, but there rots in the Ground.

(3) In very light Land the Seed will come up from a greater Depth; but the moſt ſecure way is, not to ſuffer it to be cover'd Deep in any Land.

(4) We ſay it is Malted when it lies above Ground, and ſends out its Root, which is killed by the Air. And whether we plant *bad* Seed that does not grow, or *good* Seed Buried or Malted, the Conſequence will be much the ſame, and the Ground may be equally Underſtock'd with Plants.

(5) The worſt Crop that can be Sown amongſt *St. Foin*, is Clover or Rye-Graſs; Barley or Oats continue but a little while to rob it, but the other Artificial Graſſes rob it for a Year or Two, until the Artificial Paſture is near loſt; and then the *St. Foin* never arrives to half the Perfection as it will do when no other Graſs is Sown amongſt it.

The Injury theſe Hay-Crops do to the *St. Foin* is beſt ſeen where ſome Parts of the ſame Field have them, and the other Parts are without them.

If

If Barley, Oats, or other Corn ſown with *St. Foin* do Lodge, it will kill (1) the young *St. Foin* that is under it: But then ſo great a Crop or Corn will certainly anſwer the very little Expence of Drilling the *St. Foin* again, either the next Year, or as ſoon as the Corn is off the Ground.

St. Foin Drill'd betwixt Rows of Barley or Oats, always is ſtronger than when Drill'd amongſt Corn that is Sown at Random; and therefore is in leſs danger of being kill'd by the Lodging of the Corn; neither is the Corn in Rows ſo liable to fall as the other.

The Quantity of Seed to be Drill'd on an Acre will depend in great meaſure upon the Goodneſs of it; for in ſome bad Seed, not more than One in Ten will grow, and in good Seed, not One in Twenty will miſs; which is beſt known by ſtripping off the Husks of a certain Number of Seeds, and planting the Kernels in Earth, in the Manner directed for finding the proper Depth to plant at, which in this caſe let be Half an Inch; this being done, the Quality of the Seed will be known; but until frequent Trials have furniſh'd Experience enough to the Planter to know the difference, let him obſerve that the following are good Signs, *viz.* The Husk of a Bright Colour, the Kernel Plump, of a light Grey or Blue Colour, or ſometimes a ſhining Black; yet the Seed may be good, tho' the Husk is of a dark Colour, if that is cauſed by its receiving Rain in the Field, and not by Heating in a Heap, or in the Mow; and if you cut the Kernel off in the Middle, croſs-ways, and find the Inſide of a Greeniſh freſh Colour, it's ſurely Good; but if of a Yellowiſh Colour, and Friable about the Navel, and Thin, or Pitted, theſe are Marks of bad Seed.

The Quantity, or rather Number of Seeds convenient to Drill, ought to be computed by the Number of Plants (2) we propoſe to have for making the beſt Crop, allowing for Caſualties (3).

In drilling *St. Foin* not to be Hoed, and before the Plows of my Drill were ſo perfect in making narrow Channels as they are now, (for when the Channels were open, they had Six times the Breadth, wherein part of the Seed was wafted) then my Quantity was One Buſhel to an Acre, ſometimes Six Gallons.

But a ſingle Acre (in the middle of a large Field of *St. Foin*) being Drill'd

(1) When Barley, among which the *St. Foin* is Planted in a dry Summer, is great, there are few Farmers that know till the next Spring, whether the *St. Foin* ſucceeds or not; becauſe the young Plants are not then Viſible; unleſs it be to thoſe who are accuſtomed to obſerve them in all the Degrees of their Growth. I have ſeen a Field of Ten Acres of ſuch, wherein, after the Barley was carried off, nothing appeared like *St. Foin*; but when by the Print of the Channels I ſearched diligently, I found the ſmall *St. Foin* Plants thick enough in the Rows; they had no Leaves, they being cut off by the Scythe, no Pare of them that was left had any green Colour; but from the Plants there came out many Sprigs like Hog's Briſtles, or like the Beard of Barley: This whole Piece of *St. Foin* ſucceeded ſo well, that the third Year its Crop was worth Three Pounds per Acre, the Land being good.

(2) Not that we need to be ſo exact as to the Number of Plants, whether they be Two, Three, or Four Hundred upon a ſquare Perch. Neither is it poſſible to know before-hand the preciſe Number of Plants that may Live, for ſometimes the Grub Kills many, by Eating off the firſt Two Leaves.

(3) Many, even of the beſt Seeds, both Sown and Drill'd, are liable to Caſualties, but not equally; for about Twenty-Eight Years ago, my Servants (being prime Seeds-Men) had a Fancy in my Abſence to Try an Experiment of the Difference betwixt Sowing and Drilling of *St. Foin*; and in the middle of a large Field of my beſt Land, they Sow'd a Square Piece of Three Acres, at the Rate of One Buſhel to an Acre, not doubting, but by their Skill in Sowing *even*, it would ſucceed as well as if Drill'd; but it Succeeded ſo much againſt their Expectation, that the Land all round it, which was Drill'd at the ſame Time, with the ſame Proportion of the ſame Seed, brought extraordinary good Crops of *St. Foin*; but the Sow'd Part was ſo very Thin, that tho' it lay'd ſtill with the reſt for Eight Years, it never was a Crop, there not being above Three or Four upon a Square Perch, taking the Three Acres altogether; not that it can be ſuppoſed, that the Sown would always meet with ſo many Caſualties as this did; for then Eight Buſhels Sown to an Acre might have been too Thin, and much Thinner than all the reſt of the Field was, tho' Drill'd with only One Buſhel to an Acre: And 'tis often ſeen, that when an Acre is Sown with Seven Buſhels of Seed, the *St. Foin* is as much too Thick, as that Sown with One Buſhel was too Thin.

I do not know, that of the many Hundred Acres of *St. Foin*, that have been Drill'd for me, ever One Acre was too Thin, except when Planted with Wheat, the Young Plants were kill'd by the Froſt.

U late

late in *October*, the frosty Winter kill'd at least Nineteen of Twenty Parts (1) of that Bushel. At first it made such a poor Appearance, that 'twas by meer Accident, or it had been Plow'd up for a Fallow; but missing of that, a few Plants were perceiv'd in the Summer, which by their Singleness grew so vigorous and so very large, that the second Year of Mowing it, produc'd a Crop Double to the rest of the same Field which was Drill'd in the Spring, with the same Proportion of Seed, and none of it kill'd; tho' all this Field was a much better Crop than some that was sown in the common Manner, with Seven Bushels to an Acre. I have generally observ'd the Thin (2) to make the best Crop, after the First or Second Year.

I have also often observ'd in Lands of *St. Foin*, lying dispersed in a common Field, (but where there was not Common for Sheep) and where the Ends of other Lands kept in Tillage, pointed against the Pieces of *St. Foin*, and the Horses and Plows turning out upon the *St. Foin*, did plow and scratch out a Multitude of its Plants; so that it was thought to be spoil'd, and Law-suits were intended for Recompence of the Damage: but afterwards this scratch'd Part, supposed to be spoil'd, became Twice as good as the rest of the same Pieces, where the Plows did not come to tear up any Plants.

The Reason why the Single *St. Foin* Plants make the greatest Crops, is, That the Quantity of the Crop is always in Proportion to the Quantity of Nourishment it receives from the Earth, and those Plants which run deepest will receive most, and such as are single will run deeper than those which are not single.

Also the single do send out all round them Horizontal Roots, proportionably stronger and larger, whereby they are better able to penetrate, and extract more Nourishment from the Staple or upper *Stratum*, than the other can do (if there be a competent Number, which is when Ho'd fewer than any Body imagines.) 'Tis common to see a Single *St. Foin* have a bigger Tap-Root than Twenty Thick ones; their length is in proportion to their bigness, therefore that single Plant may well be supposed to have Twenty times more Depth of Earth to supply it, than all those Twenty small Roots can reach to. And tho' these under *Strata* are not so Rich as the upper, yet never having been drain'd by any Vegetable, they do afford a very considerable Quantity of Nourishment to those Roots which first enter them.

The small thick Plants are so far from equalling the Product of the single, by their excess of Number, that the more they are, the smaller, shorter and weaker they become; less Nourishment they have, and the less Crop they produce, and are soon starv'd, decay and die, unless relief'd by the Expence of frequent Manure, or that the Soil be very Rich.

Single Plants exceed the other by a Multitude of Degrees, more than a Giant does a Dwarf in Strength, as well as Stature; and therefore when natural Grass happens to come, are so much the better able to shift amongst it.

The single Plants seem also to exceed the other in their Longevity; for 'tis observ'd, that all *St. Foin* that has continu'd good, for a great Number of Years without Manure, has been so single, that the Owners have determined to Plow it up at the beginning, for the Thinness of it.

(1) But I believe, there might remain *alive* Three or Four Plants to each Square Yard, standing Single and at pretty equal Distances.

(2) But notwithstanding I commend the Planting of *St. Foin* Thin, that most of the Roots may be Single; Yet I have Fields that were Drill'd with but Four Gallons of Seed to an Acre; and yet the Rows being Seven Inches asunder, the Roots are so Thick in them, that the Ground is Cover'd with the *St. Foin* Plants, which seem to be as Thick (in appearance) as most sown *St. Foin*, whereon Seven or Eight Bushels are Sown on an Acre. And I have other Fields that were Drill'd with about Two Gallons of Seed to an Acre (which is Five Seeds to each Square Foot) the Rows Sixteen Inches asunder, that produce better Crops, tho' the Ground be poorer. The Drill'd *St. Foin* being regular is more Single, tho' as thick as the Sown, and for that Reason always makes a better Crop, and lasts longer than the Sown that is of the same thickness but irregular.

How

How long this may last by Culture I can't tell, but undoubtedly much longer than without it; and I can say, that I never knew a Plant of *St. Foin* die a natural Death; the most common End of it is Starving. And when an Hundred Thick Plants have not the Nourishment which One Single Plant has, 'tis no wonder that these (in a Croud (1) thus besieg'd with Hunger) should be Starv'd before it.

Another Advantage the Single have, in respect of Moisture, these reach to a Depth where that is never wanting, even when the upper *Stratum* or Staple is parch'd up, as appears by the *Mint (G)* in the Glass and Box, that if any Root of a Plant has Moisture, that Root will communicate a Share to all the rest. Hence it is, that in the driest Summer, these Single Plants make a great Crop, when the other yield next to nothing. I remember I once saw a Farmer coming out of a Ground with a Load of *St. Foin* Hay, which he assured me was all he could find worth Cutting out of Forty Acres, of this Thick sort in full Perfection, Three Years after sowing; he valued his Load at Three Pound, but withal said, it came off so much Ground, that the Expence of Mowing, Raking, *&c.* was more than the Value. When in the very same dry Summer, there was Three Tun of *St. Foin* to an Acre in a Field, where it was Drill'd single and regularly.

And I have often observ'd, that where the Plants are thin, the Second Crop of them springs again immediately after Cutting; when Plants that stand thick in the same Ground, spring not 'till Rain comes: and I have seen the thin grown high enough to cut the Second time, before the other begun to spring.

The best way to find what Number of these Plants is proper to have on a Perch of Ground, is to consider what Quantity of Hay one large Plant will produce (for if Cultivated, they will be all such.)

Without Culture these Plants never attain to a fourth Part of the Bulk they do with it, therefore very few have seen any one Plant at its full Bigness; one Plant well Cultivated has in the same Ground made a greater Produce than One Thousand small ones Uncultivated.

But the Hay of a large single cultivated Plant will weigh more than Half a Pound; and 112 Plants upon a square Perch, weighing but a Quarter of a Pound apiece one with another, amount to Two Tun to an Acre.

If *St. Foin* be Planted on some sorts of Land early in the Spring and Ho'd, it may bring a Crop the same Summer; for I once planted a few Seeds of it on Sandy Ground in my Garden, at the End of *February*, which produced large Plants above Two Foot high, that went into Blossom the following *June*, tho' there was a severe Frost in *March*, which kill'd abundance of Wheat, yet did not hurt these Plants: This shews that *St. Foin* is a quick grower, unless it be planted on poor cold Ground, or for want of Culture.

And tho' the poor Land and ill Management generally allotted to it, causes it to yield but One mowing Crop a Year, yet it has yielded Two great Ones on rich sandy Land, even when sown in the common ordinary manner.

Thin *St. Foin* cannot be expected to cover all the Ground at first, no more than an Orchard of Apple-Trees will, when first Planted, at Thirty Foot distance from each other every way; yet this is reckon'd a proper Distance to make a good and lasting Orchard. But if these should be Planted at Three Foot distance, as they stand in the Nursery, it would not be more unreasonable than the common Method of Sowing *St. Foin* is; and there would be much the same Consequence in both, from Covering all the Ground at first Planting; except

(1) Sown Plants when too Thick are *Crouded* on every Side, but those that are Drill'd, have always Room enough on Two sides of them; unless the Rows are too near together.

that

that the *St. Foin* being abundantly longer Rooted downwards, than Apple-Trees are, has the greater Disadvantage, when by its Thickness 'tis prevented from growing to its full bulk, and length of Roots (1).

The difference is only this, People are accustom'd to see Apple-Trees planted at their due Distance, but few have seen *St. Foin* planted and cultivated at the Distance most proper to *St. Foin*, or ever consider'd about it, so much as to make the necessary Trials.

I have constantly found, that upon doubling any Number of narrow Rows, having equal Number of Plants in each Row, the Crops have been very much diminish'd; and upon leaving out every other Row, that is, lessening the Number of Rows to Half, the Crops are encreased: and where Two Rows are wide asunder at one End of a Piece, and near at the other End, the Plants are gradually less and less, as the Rows approach nearer together.

We ought never to expect a full Crop of *St. Foin* the First Year, if we intend to have good Crops afterwards; and that it shall continue to produce such, for the same Reasons that must be given for Planting an Orchard at other Distances than a Nursery.

The common Error proceeds from mistaking the Cause of a great or small Crop. Where the Spaces betwixt Rows are wide (if there be not too many Plants in them) we always see the *St. Foin* grow Large, and make the greatest Crop; but when 'tis Young, or after Cutting, we see room (as we fancy) for more of such Plants, to make a yet larger Crop; not considering that 'tis the Wideness of those Spaces, and less Number of Plants, that cause the Crop to be so large, there being more Pasture for those Plants.

Where these Spaces are Narrower, and the Rows of equal Thickness, we see the Plants less when grown, and that they make a less Crop, and yet there seems to be room for more Rows, which we fancy might make the Crop larger, not considering that 'tis the Narrowness of those Spaces that cause the Plants and Crop to be less, for want of sufficient Pasture.

Thus fondly encreasing the Number of our Rows and Plants, we bring our Crop (unless the Soil be Rich) to nothing, by too much overstocking their Pasture: And if that Pasture be overstock'd, the Crop will be diminish'd more than in proportion to that over Charge; for perhaps 'tis not impossible to prove (if we would be curious) that Plants by wanting a Fourth Part of their due *Quantum* of Nourishment, will be diminish'd to Half (2) of their Bulk they would have attained to, had they been supply'd with the other Fourth Part.

I have observ'd Ho'd *St. Foin* to grow more, and encrease its bulk more in Two Weeks, than Unho'd *St Foin* in the same Ground (and without any other difference) have done in Six Weeks: and the quicker it grows by being better fed, the sweeter and richer Food it will make for Cattle, whether it be spent Green or Dry (3).

At whatever Distance the Rows be set, if they have too many Plants in them, the Crop will be very much injured; and the greater the Excess is beyond the

(1) Horizontal-Rooted Plants suffer no greater Injury by their Pasture's being overstock'd than Cattle do; because their Pasture lying near the Surface of the Ground, they have it all amongst them: But *St. Foin*, and other long Tap-Rooted Plants suffer yet more, because great part of their overstock'd Pasture is lost by them all, when they hinder One Another from reaching down to it, by shortening One Another's Roots, which they do when they all become Dwarfs by reason of their Over-Thickness.

(2) When Plants have not their due Nourishment they suffer the more by Cold, and Drought, so that Want of Nourishment diminishing their Growth One Fourth, Cold, or Drought, or both may diminish it another Fourth.

(3) Cattle are the best Judges of the Goodness of Grass, and they always choose to feed on *St. Foin* that is most Vigorous, and refuse that which is Poor and Yellow. And the Richest Sweetest Grass will always make the best Hay; for the Drying of it does not change the Quality of the Grass.

just Number, the more void Space there will be amongst them; because the smaller the Plants are, the less Ground they cover.

I have had the Experience of Drilling at all Distances, from Thirty Three Inches to Seven Inches, betwixt the Rows; and recommend the following Distances, for the different Methods of Drilling; whether the *St. Foin* be design'd for Hoing, or not. As,

First, For *Horse-Hoing*, I think it is best to drill Double Rows with Eight-Inch Partitions, and Thirty-Inch Intervals; which need only be Ho'd alternately, leaving every other Interval for making the Hay thereon.

Indeed I have never yet had a whole Field of Ho'd *St. Foin*; but have enough to shew, that Horse-Hoing makes it Strong upon very poor Land, and causes it to produce Two Crops a Year upon indifferent Land.

It is not necessary to Hoe this every Year; but we may intermit the Hoing for Three or Four Years together, or more if the Land be good.

Whilst the Plants are small the First Year, Care must be taken not to cover them with the Plow; afterwards there will be no great danger, especially in Winter, the Earth not being suffer'd to lie on them too long.

Secondly, For Hand-Hoing drill the Rows Sixteen Inches asunder, and single out the Plants, so as to make them Eight Inches apart at least in the Rows, contriving rather to leave the Master-Plants, than to be exact in the Distance; this must be done whilst they are very Young, or in Summer; else they will come again that are cut off by the Hoe.

Lastly, When *St. Foin* is drill'd without any Intention of Hoing, the best way (I think) is to plant single Rows, at Eight Inches distance, with no greater Quantity of Seed, than when the Rows are at Sixteen Inches distance; because by this Method, the same Number of Plants in the Rows, that are but Eight Inches apart, will be much more Single, than in the Rows at Sixteen Inches apart are, without being set out by the Hoe.

Which of these Methods soever is practis'd, the Land should be made as Clean from all Grass, and as well Pulveriz'd as possible, before Drilling.

The Tines of the Drill-Harrow must exactly follow the Shares, which leaving the Channels open, the Tines cover the Seed, some at Bottom, and some on each Side; so that it's cover'd very Shallow, tho' it lies Deep within the Ground, where there is more Moisture, than nearer to the Upper Level Surface; this causes the Seed to come up in dry Weather, and yet it's not in danger of being buried by a too great weight of Mould incumbent on it.

But take Heed that no other Harrow come on it after 'tis Drill'd, for that might Bury it. I never care to Roll it at all, unless on account of the Barley, and then only in very dry Weather, with a light Roller, Length-ways of the Rows, immediately after 'tis Drill'd, or else stay Three Weeks afterwards, before it be Roll'd, for fear of breaking off the Heads of the Young *St. Foin*.

Be sure to suffer no Cattle to come on the young *St. Foin* the first Winter (1), after the Corn is cut that grows amongst it; their very Feet would injure it by treading the Ground hard, as well as their Mouths by cropping it: Nor let any Sheep come at it, even in the following Summer and Winter.

One Acre of well drill'd *St. Foin*, considering the different Goodness of the Crops, and the Duration of it, is generally worth Two Acres of sown *St. Foin* on the same Land, tho' the Expence of Drilling be Twenty times less than the Expence of Sowing it.

(1) The First Winter is the Time to lay on Manure, after the Crop of Corn is off; such as *Peat-Ashes*, or the like; because there being no Natural Grass to partake of it, and the Plants being less, less will supply them; and because when made strong in their Youth, they will come to greater Perfection: But I never use any Manure on my *St. Foin*.

One of the Causes why *St. Foin* that is properly Drill'd, lasteth longer (1) without Manure than the Sown, is, That the former neither over nor understocks the Pasture, and the latter commonly, if not always, doth one or the other, if not both; *viz.* Plants too thick in some Places, and too thin in others; either 'tis not single, but in Bunches; or if it be single 'tis too thin, it being next to impossible to have the Plants come true and regular, or nearly so, by Sowing at *random*. Plants too thick soon exhaust the Pasture they reach, which never is more than a small part of that below the Staple; when the Plants are too thin, the *St. Foin* cannot be said to last at all, because it never is a Crop.

They who *sow* Eight or Ten Bushels of good Seed on an Acre in a good Season, among their Corn, with Intent that by its Thickness it should Kill other Grass, reduce their *St. Foin* almost to that poor Condition I have seen it in, where it grows naturally Savage without Sowing or Tillage, upon the *Calabrian* Hills near *Croto*: It makes there such a despicable Appearance, that one would wonder how any Body should have taken it in their Head to propagate so unpromising a Plant; and yet there has scarce been an Exotick brought to *England* in this or the last Age, capable of making a greater or more general Improvement, were it duly Cultivated.

Some think the *Cythisus* would exceed it, but I am afraid the Labour of Sheering those Shrubs by the Hands of *English* Servants, would cost too much of its Profit.

Luserne requiring more Culture, and being much more difficult to be fitted with a proper Soil, never can be so general as *St. Foin*.

Mr. *Laurence*, in his new System of *Agriculture*, pag. 400, is in hopes of succeeding in his Project of Cultivating *Assa Fœtida* in *England* in lieu of *St. Foin*, and that it may be a greater Improvement than It or *Clover*. But I must beg leave to suspect a little his Sincerity, when he delivers his Opinion, that Sheep Fatted with *Silphium* or *Assa* would make Mutton of such a wonderful pleasant Taste, as to be preferable and more delicate than that of *Bagshot-Heath*; especially when he relates, That one Drachm of it fresh from the Roots, casts a stronger Smell than one Hundred Pound of it sold by our Druggists; And how 'the whole Air of a Place is infected with its noisom Stench; and that *Ro-* 'nodæus thinks the *Indian* Palates are made of Brass to endure it.

Upon the whole, this Reverend Gentleman's Meaning (for all Good Men mean well) seems to be for introducing *Silphium*, as an Improvement of another Kind than that of *St. Foin*, *viz.* That if he could prevail with the *English* to plant *Assa* all over the Island, as frequent as *St. Foin* and *Clover* are; so that by *Assuetude*, English Noses might become as Brazen as those of *Ronodæus*'s Indians (for those of the *London* Goldfinders would be a Million of times too nice) then Mr. *Laurence*'s Project would be an extraordinary Improvement, and save the immense Charge of a Fleet to defend us; for tho' we had no other Guard but only this general Stench of *Assa*, it would be as dangerous for any *European* Army to approach *England*, as for Serpents and Toads to invade *Ireland*. When this Contrivance succeeds, Mr. *Laurence* will deserve no less of his Country, than St. *Patrick* did of his. But because it may probably be a long Time before this Contrivance be so fully effected, as to bring *St. Foin* quite out of Fashion, let us consider in the *interim* the best Methods of ordering it for Hay and for Seed. The Profit of *St. Foin* Fields arising from either of these ways, is a great Advantage to their Owner, above that of natural Meadows; for

(1) I have Now a great many single *St. Foin* Plants in my Fields, that are near Thirty Years of Age, and yet seem as Young and Vigorous as ever; and yet it is common for Thick *St. Foin* to wear out in Nine or Ten Years, and in Poor Land much sooner, if not often manured by *Soot*, *Peat-Ash*, or *Coal-Ash*.

if

if Meadow-Hay cannot have good Weather to be Cut in its season, it can serve for little other use than as Dung, and yet the Expence of Mowing it, and Carrying it off must not be omitted. But if there be not Weather to cut *St. Foin* before Blossoming, we may expect it 'till in Flower, or may stay 'till the Blossoms are off; and if it still Rain on, may stand for Seed, and turn to as good account as any of the former: So that it has four Chances to one of the Meadow.

The elevated but not mountainous Situation of the dry Land whereon *St. Foin* is mostly planted, renders it so commodious for making of Hay, that it escapes there the Injury of Weather, when Hay in low Meadows is utterly spoil'd.

On the high Ground the Wind will dry more in an Hour, than on the Meadows in a whole Day. The Sun too has a more benign Influence above, and sends off the Dew about Two Hours earlier in the Morning, and holds it up as much longer in the Evening. By these Advantages the *St. Foin* has the more time to dry, and is made with half the Expence of Meadow-Hay.

But before the manner of Making it be describ'd, the proper time of Cutting it ought to be determin'd; and upon that depend the degrees of its Excellence (besides upon the Weather which is not in our Power) for tho' all Sorts of this Hay if well made be good, yet there is a vast Difference and Variety in them.

The several Sorts may be principally distinguish'd by the following Terms, *viz.* First, The *Virgin*. Secondly, The *Blossom'd*. Thirdly, The *full Grown*. And Fourthly, The *Thrash'd Hay*.

The First of these is Best of all beyond Comparison, and (except *Luserne*) has not in the World its Equal. This must be Cut before the Blossoms appear: For when it stands 'till full Blown, the most spiritous, volatile, and nourishing Parts of its Juices is spent on the next Generation; and this being done all at once, the Sap is much depauperated, and the *St. Foin* can never recover that Richness it had in its Virgin State. And tho' when in Blossom it be *literally* in the *Flower* of its Age, 'tis really in the Declension of it. If it be said, that what is not in the Stalk is gone into the Flower, 'tis a Mistake; because much the greatest Part of its Quintessence perspires thence into the Atmosphere.

And moreover, That all Vegetables are in some degree weaken'd by the Action of continuing their Kind, may be inferr'd from those Plants which will Live several Years, if not suffer'd to Blossom; but whenever they Blossom, it causes their Death, tho' in the first Year of their Life. For in Plants (as Dr. *Willis* observes in Animals) Nature is more solicitous to continue the Species, than for the Benefit of the Individual.

Part of a Drill'd *St. Foin* Ground was Cut the Beginning of *May*, before Blossoming (1), and from the time of Cutting, until it was set up in Ricks, being about Ten Days, the Sun never shone upon it; but the Weather was Misty, at last it was forc'd to be carried together for fear of Rain, so Green that out of the largest Stalks one might wring Milky Juice; yet by making the Hay up in several little Ricks, and drawing up a great Chaff Basket in the Middle of each, its Firing was prevented; but it look'd of a dark Colour by Heating; and was the very Best (2) Hay that ever I had.

(1) By Cutting before Blossoming is not meant before any One Blossom appears, for here and there a Bud will begin to open with a Red Colour long before the rest; therefore, when we perceive only a very few Blossoms beginning to Open, (perhaps but one of a Thousand) we Regard them as none.

(2) This Hay so cut before Blossoming, has kept a Team of working Stone-Horses, round the Year fat without Corn, and when tryed with Beans and Oats mixed with Chaff, refused it for this Hay. The same Fatted some Sheep in the Winter, in a Pen with only It and Water; they Thrived faster than other Sheep at the same Time fed with Pease and Oats. The Hay was weighed to them, and the Clear Profit amounted to Four Pound *per* Tun. They made no Waste, tho' the Stalks were of an extraordinary Bigness, they would break off short, being very Brittle: This grew on Rich Ground in *Oxford-shire*.

The

The other Part of the Ground was afterwards Cut in the Prime of its Flower, and made into Hay by the Heat of the Sun, without Rain or Mist: This came out of the Ricks at Winter with a much finer Colour, and as fine a Smell as the Virgin Hay, but did not come near it in Fatting Sheep, or keeping Horses Fat at hard Work, without any Corn, as the Virgin Hay did.

This superfine Hay cannot well be had of Poor Uncultivated (1) *St. Foin*; because That may not be much above a Handful high, when 'tis in Condition to be so Cut, and would then make a very light Crop, and would be a great while e'er it sprang up again: But the Rich will have Two or Three Tun to an Acre, and spring again immediately for a Second Crop; so that little or no Quantity would be lost by so great an Improvement of its Quality. For Ho'd *St. Foin* upon a Poor Chalky Hill, Cut at the same time with that uncultivated on a Rich Valley, does in dry Weather grow again without delay, when the Valley attends a Month or more for a Rain, to excite its vegetative Motion.

This Hay the Owner (if he be Wise) will not Sell at any common Price; but endeavour to have some of it every Year, if possible, for his own Use.

The Second Sort of *St. Foin* Hay is that Cut in the Flower, and tho' much inferiour to the *Virgin* Hay, it far exceeds any other Kind, as yet commonly propagated in *England*; and if it be a full Crop, by good Culture, may amount to above Three Tun on an Acre. This is that *St. Foin* which is most commonly Made, and the Larger it is, the more Nourishing for Horses. I have known Farmers, after full Experience, go Three Miles to fetch the largest Stalky *St. Foin*, when they could have Bought the small, fine Leafy sort of it at Home, for the same Price by the Tun.

The next and last Sort of *St. Foin* that is Cut only for Hay, is, the *full Grown*, the Blossoms being gone, or going off; this also is good Hay, tho' it fall short by many degrees of the other Two sorts: It makes a greater Crop than either of them, because it grows to its full Bulk, and shrinks little in Drying.

This gives the Owner a Third Chance of having Weather to make good Hay, and spins out the Hay-Season 'till about *Midsummer*; and then in about a Fortnight, or Three Weeks after the Hay is finish'd, the Seed is Ripe. But First of the manner of Making *St. Foin* Hay.

In a Day or Two after *St. Foin* is mow'd it will, in good Weather, be Dry on the upper Side; then turn the Swarths, not singly, but Two and Two together; for by thus turning them in Pairs, there is a double Space of Ground betwixt Pair and Pair, which needs but once Raking: Whereas if the Swarths were turn'd singly, that is, all the same way, suppose to the *East* or *West*, then all the Ground will require to be Twice Raked; at least more of it, than the other way.

As soon as both Sides of the Swarths are dry from Rain and Dew, make them up into little Cocks the same Day they are turn'd, if conveniently you can; for when 'tis in Cock, a less Part of it will be exposed to the Injuries of the Night, than when in Swarth.

Dew being of a Nitrous penetrating Nature, enters the Pores of those Plants it reaches, and during the Night possesses the room from whence some of the Juices is dry'd out; thus it intimately mixes with the remaining Sap, and when the Dew is again exhal'd, it carries up most of the vegetable Spirits along with it, which might have been there fix'd, had they not been taken away in that subtile Vehicle.

If *St. Foin* be spread very thin upon the Ground, and so remain for a Week in hot Weather, the Sun and Dew will exhaust all its Juices, and leave it no more Vertue than is in Straw.

(1) I reckon Manure of *Peat-Ashes*, *Soot*, or the like, to be a Culture.

There-

Therefore 'tis best to keep as much of our Hay as we can from being exposed to the Dews, whilst 'tis in Making; and we have a better Opportunity of doing it in this, than in natural Hay; because the bigger the Cocks are, the less Superficies (in proportion to the Quantity they contain) will be exposed to the Dew; and *St. Foin* may be safely made in much larger Cocks than Natural Hay of equal Dryness can, which sinking down closer excludes the Air so necessary for keeping it sweet, that if the Weather prevents its being frequently mov'd and open'd, it will ferment, look yellow, and be spoil'd; against this Misfortune there is no Remedy, but to keep it in the lesser Cocks until thoroughly Dry. *St. Foin* Cocks (twice as big as Cocks of Natural Hay) by the less Flexibility of the Stalks admitting the Air, will remain longer without Fermenting.

This being able to endure more Days unmov'd, is also an Advantage upon another account, besides the Weather; for tho', in other Countries, People are not prohibited using the necessary Labour on *all Days* for preserving their Hay, even where the certainer Weather makes it less necessary than here, yet 'tis otherwise in *England*; where many a Thousand Load of Natural Hay is spoil'd by that Prohibition for want of being open'd; and often by the loss of One Day's Work, the Farmer loses his Charges and Year's Rent, which shews that to make Hay while the Sun shines, is an Exotick Proverb against English Laws, whereunto *St. Foin* being, in regard of Sundays and Holidays, more conformable, ought to be the Hay as proper to *England* as those Laws are.

But to return to our Hay-makers. When the first Cocks have stood One Night, if nothing hinder, let them Double, Treble, or Quadruple the Cocks, according as all Circumstances require, in this manner, *viz.* Spread Two, Three, or more together in a fresh Place; and after an Hour or Two turn them, and make that Number up into One Cock; but when the Weather is doubtful, let not the Cocks be thrown or spread, but enlarge them, by shaking several of them into One; and thus hollowing them to let in the Air, continue encreasing their Bulk, and diminishing their Number daily, until they be sufficiently dry to be carried to the Rick.

This I have found the most secure way, tho' it be something longer in Making, there is much less Danger than when a great Quantity of Hay is spread at once; for then a sudden Shower will do more Harm to One Acre of that, than to Twenty Acres in Cock.

And the very best Hay I ever knew in *England*, was of *St. Foin* made without ever spreading, or the Sun's shining on it. This way, tho' it be longer e're finish'd, is done with less Labour than the other.

Not only a little Rain, but even a Mist will turn *Clover-Hay* Black; but *St. Foin* will not with any Weather turn Black until it be almost rotten, its Leaves being thinner than those of *Clover*.

If *St. Foin* be laid up pretty green it will take no Damage, provided it be set in small Round Ricks, with a large Basket drawn up the middle of each, to leave a Vent-Hole there, thro' which the superfluous Moisture of the Hay transpires.

As soon as its Heating is over, these Ricks ought to be Thatch'd; and all *St. Foin* Ricks, that are made when the Hay is full dry'd in the Cocks, ought to be Thatch'd immediately after making them.

That which is laid up most dry'd, will come out of the Rick of a Green Colour; that which has much heated in the Rick, will have a Brown Colour.

The Seed is a Fourth Chance the Owner has to make Profit of his *St. Foin*: But this, if the *Hoing-Husbandry* were general, would not be vendible in great

Quan-

Quantities for Planting; becauſe an ordinary Crop of an Acre, will produce Seed enough to Drill an Hundred Acres, which would not want Replanting in a long Time.

The other Uſe then of this Seed is for Provender, and it has been affirm'd by ſome who have made Trials of it, that Three Buſhels of Good *St. Foin* Seed given to Horſes, will Nouriſh them as much as Four Buſhels of Oats. When well order'd it is ſo *Sweet*, that moſt ſorts of Cattle are greedy of it. I never knew ſo much of it given to Hogs, as to make them become fat Bacon; but I have known Hogs made very good Pork with it, for an Experiment; and being Valued at the beginning of their Feeding, and the Pork by the Score when the Hogs were kill'd, which computed with the Quantity of Seed they eat, did not amount to near the Value of the ſame Seed ſold for Sowing; that being Three Shillings *per* Buſhel, and the Profit made by giving it to the Hogs was but Two Shillings a Buſhel.

The Goodneſs of the Seed, and of the Hay out of which it is Thraſh'd, depends very much upon the manner of Ordering them.

This Thraſh'd Hay, when not damaged by wet Weather, has been found more Nouriſhing to Horſes, than coarſe Water-Meadow Hay; and when 'tis cut ſmall by an Engine is good Food for Cattle, and much better than Chaff of Corn.

It requires ſome Experience in it, to know the moſt proper Degree of Ripeneſs, at which the Seeded *St. Foin* ought to be Cut; for the Seed is never all Ripe together, ſome Ears bloſſom before others; every Ear begins Bloſſoming at the lower Part of it, and ſo continues gradually to do upward for many Days; and before the Flower is gone off the Top, the Bottom of the Ear has almoſt fill'd the Seeds that grow there; ſo that if we ſhould defer Cutting until the top Seeds are quite ripe, the lower which are the beſt, would ſhed and be loſt.

The beſt time to Cut, is when the greateſt part of the Seed is well fill'd; the firſt blown ripe, and the laſt blown beginning to be full.

The Natural Colour of the Kernel, which is the real Seed, is Grey or Blueiſh when ripe; and the Husk which contains the Seed is, when ripe, of a Browniſh Colour. Both Husk and Seed continue perfectly Green for ſome time after full grown; and if you open the Husk, the Seed will appear exactly like a green Peaſe when gather'd to Boil, and will like that eaſily be ſplit into Two Parts. Yet *St. Foin* Seed in this green Plight will ripen after Cutting, have as fine a Colour, and be as good in all reſpects, as that which was ripe before Cutting: Some for want of obſerving this, have ſuffer'd their Seed to ſtand ſo long, 'till it was all Ripe, and loſt in Cutting.

St. Foin Seed ſhould not be Cut in the Heat of the Day, whilſt the Sun ſhines out; for then much, even of the unripe Seed, will ſhed in Mowing: Therefore in very hot Weather, the Mowers ſhould begin to work very Early in the Morning, or rather in the Night; and when they perceive the Seed to ſhatter, leave off, and reſt 'till towards the Evening.

After Cutting we muſt obſerve the ſame Rule as in Mowing it, *viz.* not to make this Hay whilſt the Sun ſhines.

Sometimes it may, if the Seed be pretty ripe, be Cock'd immediately after the Scyth; or if the Swarths muſt be turn'd, let it be done whilſt they are moiſt; not Two together, as in the other Hay aforementioned. If the Swarths be turn'd with the Rake's Handle, 'tis beſt to raiſe up the Ear-ſides firſt, and let the Stub-ſide reſt on the Ground in turning; but if it be done by the Rake's Teeth, then let them take hold on the Stub-ſide, the Ears bearing on the Earth in

in turning over. But 'tis commonly Rain that occaſions the Swarths to want Turning (1).

If it be Cock'd at all (2) the ſooner 'tis made into Cocks the better; becauſe if the Swarths be dry, much of the Seed will be loſt in ſeparating them, the Ears being entangled together. When moiſt, the Seed ſticks faſt to the Ear, but when dry, will drop out with the leaſt Touch or Shaking.

There are Two ways of Thraſhing it, the one in the Field, the other in the Barn: The firſt cannot be done but in very fine Weather, and whilſt the Sun ſhines in the Heat of the Day; the beſt Manner of this is, to have a large Sheet Pegg'd down to the Ground, for Two Men with their Flails to Thraſh on: Two Perſons carry a ſmall Sheet by its Corners, and lay it down cloſe to a large Cock, and with Two Sticks thruſt under the Bottom of it, gently turn it over, or lift it up upon the Sheet, and carry and throw it on the great Sheet to the Thraſhers; but when the Cocks are ſmall, they carry ſeveral at once, thrown upon the little Sheet carefully with Forks; thoſe which are near, they carry to the Thraſhers with the Forks only. As faſt as it is Thraſh'd, one Perſon ſtands to take away the Hay, and lay it into an Heap: And ſometimes a Boy ſtands upon it, to make it into a ſmall Rick of about a Load. As often as the great Sheet is full, they Riddle it thro' a large Sieve to ſeparate the Seed and Chaff from the broken Stalks, and put it into Sacks to be carried into the Barn to be Winnow'd.

Two Thraſhers will employ Two of theſe little Sheets, and Four Perſons in bringing to them; and when the Cocks are Thraſh'd, which ſtand at a conſiderable Diſtance all round them, they remove the Thraſhing-Sheet to another Place. There belong to a Set for one Thraſhing-Sheet Seven or Eight Perſons, but the Number of Sheets ſhould be according to the Quantity to be thus Thraſh'd: The ſooner theſe Thraſh'd Cocks are remov'd, and made into bigger Ricks the better; and unleſs they be Thatch'd, the Rain will run a great way into them, and ſpoil the Hay; but they may be Thatch'd with the Hay it ſelf, if there be not Straw convenient for it.

But the chieſeſt Care yet remains, and that is to cure the Seed; if that be neglected, it will be of little or no Value; and the better it has eſcap'd the Wet in the Field, the ſooner its own Spirits will ſpoil it in the Barn or Granary. I have known it lie a Fortnight in Swarth, 'till the wet Weather has turn'd the Husks quite Black: This was Thraſh'd in the Field, and immediately put into large Veſſels holding about Twenty Buſhels each. It had by being often Wet and often Dry, been ſo exhauſted of its fiery Spirits, that it remain'd cool in the Veſſels, without ever Fermenting in the leaſt, 'till the next Spring, and then it grew as well as ever any did that was planted.

But of Seed Thraſh'd in the Field without ever being Wetted, if it be immediately Winnow'd, and a ſingle Buſhel laid in a Heap, or put into a Sack, it will in few Days Ferment to ſuch a degree, that the greateſt Part of it will loſe its vegetative Quality: The larger the Heap the worſe; during the Fermentation it will be very Hot and ſmell Sour.

Many to prevent this ſpread it upon a Malt-Floor, turning it often; or when the Quantity is ſmall, upon a Barn-Floor; but ſtill I find that this way a great deal of it is ſpoil'd, for it will heat tho' it be ſpread but an Handful thick, and

(1) If the Swarths be not very great, we never turn them at all; becauſe the Sun or Wind will quickly dry them.

(2) Sometimes when we deſign to Thraſh in the Field, we make no Cocks at all, and but only juſt ſeparate the Swarths in the Dew of the Morning, dividing them into Parts of about Two Foot in each Part. By this means the *St. Foin* is ſooner dry'd than when it lies Thicker, as it muſt do if made into Cocks.

they

they never spread it thinner; besides they may miss some Hours of the right times of turning it, for it must be done very often; it should be stirr'd in the Night as well as the Day, until the Heating be over; and yet do what they can, it never will keep its Colour so bright as that which is well Housed, well Dry'd, and Thrash'd in the Winter: For in the Barn the Stalks keep it hollow; there are few Ears or Seeds that touch one another, and the Spirits have room to fly off by degrees, the Air entring to receive them.

The only way I have found to imitate and equal this, is to Winnow it from the Sheet, then lay a Layer of Wheat-Straw (or if that be wanting, of very dry Thrash'd Hay) then spread thereon a thin Layer of Seed, and thus *Stratum Superstratum*, Six or Seven Foot high, and as much in breadth; then begin another Stack, let there be Straw enough, and do not tread on the Stacks; by this means the Seed mixing with the Straw, will be kept cool, and come out in the Spring with as green a Colour as when it was put in, and not One Seed of a Thousand will fail to grow when planted. A little Barn-room will contain a great Quantity in this manner.

I have had above One Hundred Quarters of Clean Seed thus manag'd in One Bay of a small Barn. We do not stay to Winnow it Clean before we lay it up in the Straw, but only pass it thorough a large Sieve, and with the Van blow out the Chaff, and Winnow it Clean in the Spring.

This Field-Thrashing requires extraordinary fine Sun-shiny Weather, which some Summers do not afford at the Season, for Thrashing a great Quantity of it; for 'tis but a small Part of the Day in which the Seed can be Thrash'd clean out. They who have a small Quantity of it, do carry it into a Barn Early in the Morning, or even in the Night, whilst the Dew is on it, for then the Seed sticks fast to the Ear: As it dries they Thrash it out, and if they cure it well, have thus sometimes good Seed, but generally the Hay is spoil'd.

There is one Method of saving all the Seed good, and the Hay too, by carrying it Unthrash'd to the Barn, or Rick in a particular manner, tho' it be a great Quantity, more than can presently be Thrash'd; but must be laid up in Mows or Ricks as Corn is. Then if it be carry'd in, in the Dews or Damp, the Hay is sure to be spoil'd, if not both Hay and Seed: When 'tis taken up Dry, the Seed comes out with a Touch, and the greatest Part is lost in Pitching up the Cocks, Binding, and Jolting in carrying Home.

To avoid this Dilemma, a Person who happen'd to have a great Crop of Seed on One Hundred and Fifty Acres together (and being by Weather delay'd 'till Wheat-Harvest came on, so that most Labourers went to Reaping) was forc'd to a Contrivance of getting it in as follows, *viz.* Three Waggons had each a Board with an Hole in, fix'd Cross the Middle of each Waggon by Iron Pins, to the Top of the Rades or Sides: There was a Crane which a Man could lift, and Set into the Hole in the Board, and having an Iron-Gudgeon at the Bottom, which went into a Socket in the Bottom of the Waggon, would turn quite round: The Post of the Crane was Ten Foot Four Inches long, its Arm Four Foot Eight Inches long Brac'd; having a Treble Pulley at the End of it, and another to answer it with an Hook.

About Forty Sheets were provided, capable of holding each One Hundred and Fifty, or Two Hundred Pounds Weight of it; these had Knots or Buttons at the Corners and Middles, made by Sewing up a little Hay in these Knots, as big as Apples, into Part of the Sheet; for if any Buckle or other thing be sew'd to a Sheet plain, it will tear the Sheet. Half these Buttons have Strings ty'd to them, these Sheets are spread among the Cocks, fill'd by Two, and ty'd up by Two other Persons: There is also a light Fir Ladder, wide at Bottom, the

the Top of it fasten'd by a Piece of Cord to the Brace of the Crane, they Hitch the Hook of the lower Pulley to a fill'd Sheet, and by a little Horse at the End of the Pulley-Rope, draw it up sliding on the Ladder; 'tis up in a Moment: then the Man who is below, hitches the Crook of the Pulley to the lower Round of the Ladder, and the Loader above pulls up the Ladder from the Ground, 'till the Waggon comes to another Sheet. The Waggons are lengthen'd by Cart-Ladders before and behind, for the more easy placing of the Sheets. When about Twelve or Fifteen of them are loaded, they have a Rope fix'd to the Fore-part of each Waggon, which they bring over the Top of all the loaded Sheets, and wrest it at the Tail, to hold on the Sheets fast from falling off with Jolting. Then the Loader pulls out the Crane, and puts it into the next Waggon in the same Manner. One Waggon is Loading whilst another is Emptying in the Barn, by Treble Pulleys likewise; because 'tis Inconvenient to take it out of the Sheets by Prongs, but the Pulleys will easily draw off Two or Three Sheets together. One Waggon is always going to the Field, or coming Home. This Contrivance makes more Expedition than one would imagine: Three Loads have been Loaded and sent off in the same time this way, that One Load of Hay has been Loading, Binding and Raking off the outsides of it, in the next Ground, in the common way.

I will not relate the manner of Making a Rick of this Seed in its Hay, of monstrous Dimensions, by a sort of Mast-Pole Forty Four Foot high, with a Ten Foot Crane at the Top, which made the same Expedition; because I think, that where such a Quantity is, Dutch Barns with moving Roofs are better. Such a Rick is troublesome to Thatch and the Wind has more Power to blow the Thatch off so high in the Air, than if it were lower. Neither would I advise any one to reserve much more *St. Foin* for Thrashing, than his Barn will contain; because tho' sometimes it brings the greatest Profit by Thrashing, yet some Years 'tis apt to be Blighted.

I have been told by my Neighbour, that he had a Crop of Five Quarters of *St. Foin* Seed on an Acre; but the most Profit that ever I took notice of, was on Half an Acre, which was Drill'd very Thin, and had no Crop of Corn with it; by which Advantage it produc'd a good Crop of Seed the next Year after 'twas planted, and the Third Year this Half Acre produc'd (as was try'd by a Wager) within a trifle of Two Quarters of Seed, which was Sold for Two Pounds and Ten Shillings: the Thrash'd Hay of it was Sold in the Place for One Pound, and Two Quarters of Chaff Sold for Twelve Shillings; in all Four Pounds and Two Shillings. There was also a very good Aftermath, which was worth the Charges of Cutting and Thrashing: So that the clear Profit of the One Year of this Half Acre of Ground, amounted to Four Pounds Two Shillings: And it was remarkable, that at the same time the rest of the same Field, being in all Ten Acres, had a Crop of Barley sown on Three Plowings, which (the Summer being dry) was offer'd to be sold at One Pound *per* Acre.

I believe the greatest Part of the *St. Foin* that is sown, is spoil'd by being indiscreetly Fed by Sheep (1); which Damage is occasion'd meerly by suffering them to continue feeding it too long at a time, especially in the Spring, for then the Sap moves quick, and must be depurated by the Leaves; and as the Sun's nearer approach accelerates the Motion or Ferment of the Juices, more

(1) I never suffer Sheep to come upon *St. Foin*, except betwixt Mowing-time and *All-Saints*. And there is so much danger of Spoiling *St. Foin* by the Fraud of Shepherds, that I knew a Gentleman that Bound his Tenant never to suffer any Sheep to come thereon; and by this means his *St. Foin* continued in Perfection much longer than is usual, where *St. Foin* is suffer'd to be Fed by Sheep.

Pabulum is receiv'd by the Roots; but for want of Leaves to discharge the Recrements, and enliven the Sap with Nitroaerious Particles (the Sheep devouring the Buds continually as fast as they appear) the *St. Foin's* vital Flame (if I may so call it) is extinguish'd; the Circulation ceasing, the Sap stagnates, and then it ends in Corruption (1). But let the Sheep eat it never so low, in a short time, without continuing thereon, or cropping the next Buds which succeed those they have eaten, the Plants will recover and grow again as vigorously as ever; and if with a Spade, in the Winter, you cut off the *St. Foin* Heads an Handful deep, and take them away, together with their upper Earth, the Wound in the remaining Root will heal, and send out more Heads as good as those cut off, if those second Heads be preserv'd from Cattle, until they attain to a Bigness competent to bear Leaves sufficient for the use of the reviving Plants: Nay, I have seen Plants of *St. Foin* cut off in the Winter a Foot deep, and the Earth of that Depth taken away, and the remaining Root recover'd and grew to an extraordinary Bigness, but this was preserv'd from Cattle at first.

I esteem *St. Foin* to be much more profitable than *Clover*, because *St. Foin* is never known to do any perceivable damage to the Corn amongst which 'tis planted, but *Clover* often spoils a Crop of Barley; and I have known that the Crop of Barley has been valued to have suffer'd Four Pounds *per* Acre damage, by a Crop of *Broad Clover's* growing in it in a wet Summer: In a dry Summer both Sorts of *Clover* are apt to miss growing, and if it does grow, and the next Summer (wherein it ought to be a Crop) prove very Dry, it fails on most sorts of Land, tho' it was vigorous enough to spoil the Barley the Year it was sown; at best 'tis of but very short Duration, and therefore is not to be depended on by the Farmer, for maintaining his Cattle, which the *Broad Clover* will also kill, sometimes by causing them to Swell, unless great Care be taken to prevent it. The *Broad Clover* is esteem'd a foul Feed for Horses. The *Hop Clover* is gone out of the Ground sooner than the *Broad Clover*; I never knew it Cut more than Once: Indeed Cattle are never swoll'n by feeding on it; but then it affords but very little Feeding for them, except the Land whereon it grows be very Rich.

St. Foin is observ'd to enrich whatever Ground 'tis Planted on, tho' a Crop be taken off it Yearly.

Poor *Slate* Land (2), when it has borne *sown St. Foin* for Six or Seven Years, being Plow'd up and well Till'd, produces Three Crops of Corn, and then they sow it with *St. Foin* again.

Rich Arable Land was planted with it, and mow'd Annually with very great Crops ('twas drill'd in Nine-Inch Rows, with Six Gallons of Seed to an Acre; One Crop of it was Sold at Four Pound *per* Acre) this after about Seven Years, and in full Perfection, was Plow'd up by a Tenant, and continued for many Years after so Rich, that instead of Dunging or Fallowing it for Wheat, they were forc'd to Sow that upon Barley-Stubble, and to Feed the Wheat with Sheep in the Spring, to prevent its being too Luxuriant.

(1) Natural Grass is not kill'd by constant Feeding, because no sort of Cattle can bite it so low as to deprive it of all its Leaves; and 'tis like Eels, more tenacious of Life than the rest of its *Genus*, and will send out Leaves from the very Roots when reversed, as is too often seen where Turffy Land is Plow'd up in large Furrows.

(2) The Poverty of this sort of Land, lying upon Slate or Stone, generally proceeds from the Thinness of it, and if it were Thicker it would be good Land; much of this Earth being dispersed among the Cranies or Interstices of the Slate and Stone to a great depth, is reach'd by the Tap-Roots of the *St. Foin*, but cannot be reach'd by the Roots of Corn; and therefore when constantly kept in Tillage is of small Value, upon which account such Land is greatly improvable by *St. Foin*, even when sown in the common manner.

But

But 'tis to be noted, that the Land must be well Till'd at the *Breaking* up of old *St. Foin*, or else the First Crops of Corn may be expected to fail: For I knew a Tenant, who the last Year of his Term, Plow'd up a Field of *St. Foin*, that would have yielded him Three Pound *per* Acre; but thinking to make more Profit of it by Corn, he sow'd it with White Oats upon Once Plowing, and it proving a Dry Summer, he lost his Plowing and Seed; for he had no Crop of Oats, and was forc'd to leave the Land as a Fallow to his Successor.

Many more Instances there are of this Failure of the Crop of Corn after *St. Foin* has been broke up, and not well Till'd.

When *St. Foin* is grown old and worn out, as 'tis said to be when the Artificial Pasture is gone, and the Natural Pasture is become insufficient for the Number of Plants that are on it to be maintained, and is so Poor that it produces no profitable Crop, so that the Ground is thought proper to be plow'd up and sown with Corn, in order to be replanted (1); the most effectual way to bring it into Tilth speedily, is to Plow it up in the Winter, with a Four-Coulter'd Plow, and make it fit for Turneps by the following Season; and if the Turneps be well Ho'd, and especially if spent by Sheep on the Ground, 'twill be in excellent order to be sown with Barley the following Spring, and then it may be drill'd with *St. Foin* amongst the Barley.

To return to the Benefit Land receives by having been Planted some Years with *St. Foin*. All the Experienc'd know, that Land is enrich'd by it, but they do not agree upon the Reason why.

They agree as to the *Quo*, but not the *Quin*.

Some are of Opinion, 'tis because the *St. Foin* takes a different sort of Nourishment to that of Corn: But that I think is disprov'd in Chapter of *Change of Species*, where 'tis shewn that all Plants in the same Soil must take the same Food.

Mr. *Kirkham* thinks *St. Foin* has no Collateral or Horizontal Roots in the upper Part of the Ground where the Plow Tills for Corn, and therefore has no Nourishment from that Part of the Soil which feeds the Corn. This would be a very good Account for it, were it not utterly contrary to Matter of Fact, as every One may see.

But so far it is right, that Large (2) *St. Foin* draws the greatest Part of its Nourishment from below the reach of the Plow; and what Part it does receive from the Staple is over-balanc'd by the Second Crop or After-Lease, being spent by Cattle on the Ground; different from Corn, which is very near wholly maintain'd by the plow'd Part of the Earth, and is all carry'd off.

For tho' the under *Stratum* of Earth be much Poorer than the upper, yet that never having been drain'd by any Sort of Vegetables, must afford considerable Nourishment to the First that comes there.

(1) Or if you perceive that there is a competent Number of Plants *alive* and tolerably *single*; be they never so poor, you may recover them to a flourishing Condition in the following manner without replanting: Pulverize the whole Field in Intervals of about Three Foot each, leaving betwixt every Two of them Four Foot breadth of Ground unplow'd, when the Turf of these Intervals being cut by the Four-Coulter'd Plow is perfectly rotten: One Furrow made by any sort of Plow will Hoe One of these Intervals, by changing the whole Surface of it. The Poorer the Land is the more Hoings will be required, and the oftner 'tis Ho'd, with proper Intermissions the First Year, the stronger the *St. Foin* will become, and the more Years it will continue good, without a Repetition of Hoing.

The Expence of this cannot be great; because the Plow in Hoing an Acre in this manner Nine Times, Travels no farther than it must to Plow an Acre *Once* in the common Manner.

I need not tell the Owner that the Earth of these Intervals must be made level before the *St. Foin* can be mowed.

(2) For large *St. Foin* being single has large Roots and very long, which probably descend Twenty Foot deep: Now if we allow Four or Five Inches the Depth of the Staple, to afford a Supply equal to Two Foot below it, taking the lower Nineteen Foot Seven Inches together, upon ~~which~~ this Computation, the Part below the Staple gives the *St. Foin* about Nine Parts in Ten of its Sustenance.

And

And besides in such Land whose Poverty proceeds from the Rain's carrying its Riches too quickly down through the upper *Stratum*, the under *Stratum* must be the Richer (1) for receiving what the upper *Stratum* lets pass Unarrested.

'Tis well known that many Estates have been much Improv'd by *St. Foin*; therefore there is no occasion to mention Particulars. Only I will take notice that the First in *England* was one of about One Hundred and Forty Pounds *per Annum*, Sown with *St. Foin*, and Sold for Fourteen Thousand Pounds; and as I hear continues, by the same Improvement, still of the same Value. This is I suppose the same that Mr. *Kirkham* mentions in *Oxford-shire*.

Another Farm of Ten Pounds *per Annum* Rent, which whilst in Arable (2), was like to have Undone the Tenant, but being all Planted with *St. Foin*, by the Owner was Let at One Hundred and Ten Pounds *per Annum*, and prov'd a good Bargain.

If it should be ask'd, Why *St. Foin* is an Improvement so much greater in *England*, than in other Countries? it might be answer'd by shewing the Reason why English Arable is of so much less Value than Foreign, where the Land is of equal Goodness, and the Corn produc'd of equal Price.

(1) In Light Poor Land the Water carrying some impregnated Earth along with it down lower than it does in Strong Land, that is more tenacious of such impregnated Particles, the under *Strata* of Strong Land are likely to be Poorer than those of Light Land.

(2) These Estates consisted of Thin Slatey Land; which, before it was Planted with *St. Foin*, was Valued at Two Shillings *per* Acre, and some Part of it at One Shilling *per* Acre (as I have been inform'd) and yet Oxen are well Fatted by the *St. Foin* it produces.

Chap. XV. *Of LUSERNE.*

La Luserne is that Famous *Herba Medica* so much Extoll'd by the Ancients.

The high Esteem they had of its Use appears by the extraordinary Pains they bestow'd on its Culture.

Its Leaves resemble those of *Trefoil*; it bears a Blue Blossom very like to Double Violets, leaving a Pod like a Screw, which contains the Seeds about the Bigness of *Broad Clover*, tho' longer and more of the Kidney Shape.

The Stalks grow more perpendicular than any of the other Artificial Grasses that I know, Slender, full of Knots and Leaves; 'tis of very near an equal Bigness from Bottom to Top: When cut, if vigorous, the Stalks will spring out again from the Stubs, immediately below where the Scythe parted them, which makes them the sooner ready for another Mowing; an Advantage which no other Grass has.

It has a Tap-Root that penetrates deeper into the Bowels of the Earth than any other Vegetable She produces.

Tho' one *Luserne* Root be much more Taper than another towards the upper Part of it, 'tis sometimes seen that a single Ho'd Plant of it has many of these perpendicular Roots, some of them springing out from the very Branches of its Crown.

Its Roots are abundantly longer than the Roots of *St. Foin*: I have One that measures very near Two Inches Diameter; those which are Higher than the Ground have a Bark like a Tree. Upon this account, and by its Stalks springing again just below the Place where cut off, and by the woody Hardness of its Stalks, when they stand too long without cutting, it seems that *Luserne* is of a Nature nearly approaching to that of a Shrub.

Lu-

Luserne is the only Hay in the World that can pretend to Excel or Equal *St. Foin*. I have known Instances of the Pinguifying Virtue of this *Medica Hay*, that come up to the highest Encomiums given it by the Romans; which being to the Vulgar incredible, I forbear to relate, but leave to be confirm'd by the Experience of others, when it becomes frequent in *England*.

Luserne in Grass is much sweeter than *St. Foin*, or any other Artificial or Natural Grass. This when Ho'd may be given to Cattle cut green, for Six Months; but then care must be taken to prevent their Swelling by its Lusciousness, and not to give them too much at Once, until they be accustom'd to it.

The Quantities of *Luserne* Seed annually Imported, and Sown without Success, not discouraging People from continuing its Importation, shews there is more need of a successful way of Planting, than Recommending it in *England*.

I shall take notice of some of the Reasons why I conclude there is no hope of making any Improvement by Planting it in *England*, in any manner Practis'd by the Ancients or Moderns.

I wonder how any One should attempt to plant it here, who has seen in *Columella* and other Authors, the description of the Manner the Old Romans planted it in. They chose out the very best Land, that was both *Pinguis* and *Putris*; they Dung'd and Till'd it to the greatest Perfection, and Laid it out in Beds, as we do for Onions or Asparagus; they sow'd it very Thick, for that miserable Reason of enabling it by its Thickness the better to kill the Grass. The Beds being Harrow'd very fine before Sowing, which was in the End of *April*, the Seed required to be speedily Cover'd, lest the Sun's Heat should spoil it. But with what Instrument must it be Cover'd? For after Sowing, the Place must not be touch'd with Iron. *At Medica obruitur non Aratro, sed Ligneis Rastellis.* *Medica* Seed is cover'd, not with the Plow, but with little (or rather light) wooden Harrows. Two Days Work (of a Team) were spent on this Harrowing of one Acre. Some time after it came up, they scratch'd it again and again with the same wooden Instruments, this was call'd Sarrition; then by Runcation they weeded it over and over, *Ne alterius generis herba invalidam Medicam perimat.* Lest other Grass should kill it whilst it was Weak. The First Crop they let stand 'till some of the Seed shatter'd, to fill the Ground yet fuller of Plants: After that they might cut it as Young as they pleas'd; but must be sure to Water it often after cutting. Then after a few Days when it began to spring, they repeated their Runcation, and so continuing to Weed out all manner of Grass for the First Two or Three Years, it used to bring Four or Six Crops a Year, and last Ten Years.

English Gardeners make Forty Pound of an Acre of Asparagus, or Cabbage Plants, with Half the Labour and Expence that was bestow'd on an Acre of Roman *Medica*.

We know not the Price Hay and Grass were at in *Italy*, whilst the Roman Empire was in its Glory, and *Rome* then the Metropolis of the World, drew the Richest of all Parts thither; its Price must be then very High.

And the Romans had not only Servants, but plenty of Slaves, for whom they had scarce sufficient Employment; this might lessen the Expence of this tedious Method of Planting, and ordering the *Medica*. But when the Romans were brought down to the Level of other Nations, and in danger of being Slaves, instead of having them; and the Lands of *Italy* came to be Cultivated by Italian Hands only, they found something else more necessary to employ them in, than the Sarritions, Runcations, and Rigations of the *Medica*. Their Labour being bestow'd in getting Bread for themselves, they substituted other Artificial Grasses of more easy Culture, in the room of *Medica*, for the Food

of

of their Cattle. They were so Bigotted to all the Superstitions of their Ancestors, that they were content to lose the use of that most beneficial Plant, rather than attempt to Cultivate it by a new, tho' more rational Method, when they were become unable any longer to continue it by the old.

Thus, as I take it, Superstition has chased *Medica* from the Roman Territories, and so little of it is planted there, that beyond the *Alps*, I could not find one whole Acre of it.

Luserne makes a great Improvement in the South of *France*; there when their low Sandy Land is well prepar'd, and very clean, they Sow it alone, in *March* and at *Michaelmas* as we do *Clover*: Their Sowing it at those Seasons is of a double Advantage; First, It saves the Labour of Watering it, which would be Impracticable for so many Thousand Acres, as are there planted. Secondly, Those Seasons being much Moister than That wherein the Romans sow'd it, the Grub has Opportunity of eating more of it at its first coming up; and often the Frost kills some of it. By these Advantages the Ground is less overstock'd.

The Summers there are much Drier than in *Italy*, so that the Sun scorches up the Natural Grass, and suffers it not to come to a Turf till after some Years; and therefore has less need of Weeding.

But as that Natural Grass encreases, the Crops of *Luserne* are proportionably diminish'd: And tho' *Luserne* is said to last Ten or Twelve Years, yet it is in Perfection only for a very few Years. Whilst it is at best on their richest Land, and in a kind Summer, they have at Seven Crops Ten Tuns to an Acre, as I have computed them from the Relation of some of the Inhabitants of *Pezenas*. This was extraordinary, for I observ'd that most of their common Crops made a very Thin Swarth.

When the Ground begins to be Turffy and Hard, many of the *Luserne* Plants Die, and the rest send up very few Stalks: The People know this is the Destruction of it, and therefore I have seen some of them in that Case, Half Plow it, thinking thereby to destroy the Turf; this does for a time much strengthen the *Luserne* Plants, but it so much strengthens the Grass also, that the Turf grows the stronger, and then there is no Remedy but to Plow it up, make the Ground clean, and replant it.

In more Northern Climates where it Rains oftener, the Ground sooner becomes Hard; and in the Land otherwise most proper for *Luserne*, the Grass grows infinitely faster, and will be as strong a Turf in Two Years, as in the Hot Countries in Ten. Upon this account about *Paris*, even near the Walls, they plow up *Luserne*, and sow *St. Foin* in its room, because that endures Grass and Hard Ground better, tho' it brings but One Crop a Year, or Two at most.

And in many Places in *Franch Conte* and *Switzerland*, I have seen *Luserne* in the Corners of Vineyards, not above Two or Three Perches together, which they will at any Expence have to Cure their Horses when Sick; since they cannot obtain, by their Culture, Quantities sufficient to maintain them as their ordinary Food, there being too much Rain, and too little of the Sun's violent Heat, to prevent the speedy Encrease of Grass amongst it.

How then can we expect Succes in Sowing it *England*, where Rains are yet more frequent, and the Sun is weaker? 'Tis not One Year in Ten that the Natural Grass is here scorch'd up. In our Rich Land the Grass comes to a Turf very soon, and Poor Land will not by the common Sowing bring *Luserne* to any perfection, tho' no Grass should annoy it.

I have here seen Part of a Meadow Breast-plow'd, and when the Turf was dead, Dug up and Planted as a Garden; after it had been Drill'd with Carots, Ho'd

Ho'd and made in all appearance perfectly clean, it was Sown with *Luserne*, which came up and flourish'd very well the First Year, and indifferently the Second; but after that, the Grass came and the *Luserne* grew faint, and in Three or Four Years time there was no more left, but just to shew by here and there a Single Poor Stalk, that there had been *Luserne* Sown, except One Plant of it, which was cleansed of Grass the Third Year; and this recover'd and sent up abundance of Stalks for Two Years after it; and then the Grass returning, that Plant dwindled again.

I have often try'd it in the richest Part of my Garden, and constantly find, that however vigorously it grows at the first, yet it soon declines, when the Grass appears amongst it, which is always the sooner, by how much the Soil (in *England*) is Richer, unless the Spade or Hoe prevent it.

Here has been also many Fields of a Poorer Whitish Soil sown with it, which are not very subject to be over-run with Grass, as the Rich Land is; and tho' these were so well Till'd as scarce any Grass appear'd, during the many Years the *Luserne* liv'd therein, yet it never grew to any Perfection here neither; nor was there any One Crop worth much more than the Cutting, it was always so Poor, Thin, and Short. And by what Intelligence I can get, all Experience proves, that every Soil in this Island is too Rich, too Poor, or too Cold for the *Luserne* Improvement by the common Husbandry.

I believe every One will be confirm'd in this, who shall upon full Enquiry find, that amongst the great Quantities which have been sown in this Kingdom in that manner, never any of it was known to continue Good and Flourishing Three Years. And that on the contrary, never any One Plant of it in any Warm Soil, cultivated by the Hoing Manner, was known to fail here, or in any other Country, as long as the Hoing (or Digging about it, which is equivalent) was continued to it with proper Repetitions.

A Multitude of such Ho'd Plants have I known, and are now to be seen in both Poor and Rich Lands; therefore it seems possible, that Thousands of English Acres may be capable by the Hoing Culture, to produce Crops of *Luserne* every Year for an Age. For as the greater Moisture, and less intense Heat of this Climate, are upon the Accounts mention'd Injurious to *Luserne*, yet this is only to such as is Sown and Cultivated in the common manner, because our Climate upon the very same accounts is very Advantageous to Ho'd *Luserne*.

In Hot Countries, when the Summer is Drier than ordinary, the Sun so scorches it, that they have fewer and much poorer Crops, than in moister Summers, *viz.* only Four or Five instead of Six or Seven; but in the driest Summer I ever knew in *England*, Ho'd *Luserne* yielded the most Crops.

Our Summer Days are longer, have more of the Sun's Warmth, and less of his Fiery Heat; he cherishes but never burns *Luserne*, or any other Ho'd long Tap-Rooted Plant in *England*.

The well Ho'd Earth being open, receives and retains the Dews; the benign Solar Influence is sufficient to put them in Motion, but not to Exhale them from thence. The Hoe prevents the Turf, which would otherwise by its Blades or Roots intercept, and return back the Dews into the Atmosphere, with the assistance of a moderate Heat. So that as this Husbandry secures *Luserne* from the Injury of a Wet Summer, and also causes the Rain Water to sink down more speedily, and disperse its Riches all the way of its Passage, otherwise the Water would be more apt to stand on the Surface, chill the Earth, and keep off the Sun and Air from drying it: For when the Surface is dry and open, *Luserne* will bear a very great degree of Heat, or grow with a mean one:

one: I have seen this Ho'd *Luserne*, in a sheltry Place of my Garden, so much grown in a mild Winter, as to be measured Fourteen Inches and a Half high at *Christmas*; and a very large single Plant of it, which had not been Ho'd for Two Years before, was laid bare by Digging out the Earth all round it a Foot deep, to observe the manner of its Tap-Root; and then the Earth was thrown in again, and the Hole fill'd up. This was on the Twenty-seventh of *September*; upon this mellowing of the Soil about it, it sent out more Stalks in *October*, than it had done in the whole Summer before; they grew very vigorously, until a great Snow fell in *December*, which also preserv'd the Verdure of them, 'till that was melted away, and a Black Frost came after it, and kill'd those Stalks. It's probable this Plant sent out immediately new fibrous Horizontal Roots, which did grow apace to extract the Nourishment from this new made Pasture, in proportion to the quick growth of the Stalks, which in Summer have been measured, and found to grow in Height Three Inches and a Half in a Night and Day; this being almost One Inch in Six Hours.

And it has been my Observation, that this Plant in hot and cold Countries Thrives both with a much greater, or less degree of Heat and Moisture when it is Ho'd; for if it has Plenty of Nourishment, which Hoing always gives it, a very little Heat above, and the Moisture alone (which is never wanting to the deep Tap-Root) suffice, and that Plenty of Food enables it the better to endure the Extremes of either Heat or Cold.

We need not much apprehend the Danger of English Winters; for *Luserne* will endure those which are more Rigorous. In the Principality of *Neufchâtel* the Winters are so severe, as to Kill all the Rosemary left abroad, yet *Luserne* survives them there; this proves it more hardy than Rosemary, which is planted for Hedges in *England*, and here is scarce Twice in an Age a Frost able to Kill it.

I have one Single *Luserne* Plant in a poor Arable Field, that has stood the Test of Two and Twenty Winters, besides the Feeding of Sheep at all Seasons, and remains yet strong as ever. What Quantity of Hay this Plant yearly produces cannot be known, because at those times that Cattle are kept from it, the Hares constantly crop it, being Sweeter than any other Grass.

But this happens to be fortunately situate, where 'tis not altogether destitute of the Benefit of Hoing. 'Tis in an Angle where every time the Field is Till'd, the Plow goes over it in turning from the Furrows of One Land and One Head-Land, but it is after the Plow is lifted out of the Ground and turn'd up on One Side, so that the Share only breaks the Turf very small all round it, without plowing up the Plant; yet it has escaped it so narrowly, that the Fin of the Plow-Share has split it into Four Parts, Three of which remain and grow never the worse, but the Fourth is torn off, and the Wound heal'd up.

By the extreme hard Winter that happen'd about the Year 1708, or 1709, some of the *Luserne* in *Languedoc* was Kill'd; yet this was no Argument of its Tenderness, but rather the contrary; because then all the Olive Trees and Walnut Trees were there Kill'd, tho' the greatest Part of the *Luserne* escaped unhurt. And I did not hear One Walnut Tree was Kill'd that Winter in *England*. Perhaps those in *France* having been accustom'd to much Hotter Summers, were unable to endure the Rigor of the same Winter, that could do no harm to the same Species in *England*, where our Winters do not seem to exceed some of theirs in Cold, so much as their Summers do ours in Heat. And since the Extremes are not so far asunder here, the same degree of Cold may to our Plants seem Tepid, which to those in *Languedoc* must seem Rigorous, differing in a more remote Degree from the opposite Extremity of Heat in Summer.

And

And besides the difference of Heat and Cold in different Climates, there is another more necessary to be observ'd, and that is, the difference of the Hardiness in different Individuals of the same Species: The same Frost that kills a faint languishing Plant of *Luserne*, will be despis'd by a robust one, which being well fed by the Hoe, becomes a Giant cloath'd and fenc'd with a thick Bark, that renders it impregnable against all Weather; its Rind is to it a Coat of Mail or Buff impenetrable by Frost: But the Unho'd is generally small and weak, its thin tender Bark exposes it almost naked to the Frost, it being for want of a sufficient Pasture Starv'd and half Dead already, 'tis the more easily kill'd by the Cold.

I formerly liv'd some Years in *Languedoc*, where are many Hundred Acres of *Luserne*; and I never could find a very large Plant amongst it, unless in such Pieces as had been Plow'd up, Till'd and Sown with Corn; here indeed those Plants that remain'd (as always some would do) grew to an extraordinary Bulk; and One of those single Till'd Plants did seem to produce a greater Quantity of Stalks, than Twenty of such as had not been Plow'd up; and as there were no large Plants amongst the Unplow'd, so there were no small amongst the Plow'd ones. The same thing has been observ'd in all other Places where *Luserne* has been Plow'd.

And in *Wiltshire* several Grounds of it stood some Years without ever coming to a Substance to be of any Value, tho' the Land was whitish, and scarce any Grass appear'd amongst the *Luserne*; and therefore its Poorness was thought to proceed from the Soil's being Improper; but when it had been broke up, and sown several Years with Corn, and afterwards lain down with *St. Foin*, all the *Luserne* Plants which remain'd (and they were many) grew Large and Strong, shooting up a Yard in Height soon after the *St. Foin* was cut; and if there had been a competent Number of them undestroy'd by the Plow, they would have yielded Crops of an extraordinary Value, where before Plowing it grew but few Inches above the Ground.

It seems that in this sort of Land the Earth grows stale, e're the *Luserne* arrives at a Tenth Part of its Stature; But this is most remarkable, that Tillage transforms those *Luserne* Plants from Dwarfs to Giants; and then they are able to contend with, if not conquer so strong Plants as *St. Foin* are, tho' before Plowing they were unable to resist the Depredations of a few hairy Spires of Grass.

Since Tillage can thus recover *Luserne*, after it has long languish'd in the lowest Ebb of Life, and restore it to Health, Youth, and Vigour, and augment its Stature even after it has pass'd the Age of its full Growth; To what Bulk would it arrive regularly Planted, and Ho'd from its Infancy to Maturity, without any Check to stunt it?

We can never know how poor a Soil will bear this Plant, unless it be try'd by the Hoing Culture.

For 'tis wondrous how so Great a Man as Dr. *Woodward* should imagine, that difference of Soil should be the Reason, why Apples in *Herefordshire*, and Cherries in *Kent*, succeed better than in other Places, when in truth they are seen to prosper as well almost all over *England*, where planted, cultivated and preserv'd.

This I suppose the Doctor took from *Virgil's Quid quæque ferat Regio, & quid quæque recuset.* For when the Roman Soldiers had, as a Reward of their Rebellion, obtain'd the Lands of their Country from the lawful Owners, their Product would have disappointed all expectation of Profit, if those Lands should have been Planted with Ivory or Frankincense. Sure the Doctor did not consider, how different the Soil of these mention'd Counties is, to that of those

Climates from whence Apples and Cherries were Originally brought: it must be greater than between that of any Two Counties in *England*. The Reason why no more of these large Plantations are made, is probably for want of sufficient Laws to secure their Fruit to the Owners.

I believe Plants are more alter'd as to their Growth, by being Cultivated or not, than by Change of Climates differing in very many Degrees of Latitude. I say in their Growth, not always in their Fruit; for tho' a Peach Tree well Cultivated in a Standard, will Grow here vigorously, and be very Beautiful; yet its Fruit will be of little Value, unless it be planted against a good Wall; so *Luserne*, unless Cultivated upon a well exposed Gravel, will yield little Seed in *England*.

The Soil to plant it on is either a Hot Gravel, a very Rich Dry Sand, or some other Rich Warm Land, that has not an under *Stratum* of Clay, nor is too near the Springs of Water; for if the Earth below be of a cold Nature, which I take to be occasion'd by its holding of Water, the *Luserne* will not long prosper therein, of whatever Sort the upper *Stratum* of Earth may be: This may be guess'd at by the Vegetables a Soil naturally produces, as Fern and the like; which Mr. *Evelyn* observes do Indicate a Soil subject to Extremities of Heat and Cold, and condemns such a Soil as Accursed. I agree to that Sentence as far as relates to Cold; but am not satisfy'd of its abounding with Heat, and I am sure I know some Land very subject to Fern, which is very far from being Barren, when well cultivated and well suited with Vegetables; but from among these, *Luserne* must be excluded.

Luserne in Hot Countries grows best near Rivers, where its Roots reach the Water, which helps to mitigate the excessive Heat of the Climate; but here the Heats are so moderate, that if *Luserne* Roots are in Water (for 'tis That that makes Earth cold) it Diminishes too much the just Proportion of Heat, which *Luserne* requires.

The Natural Poorness of a Hot Gravel may be compensated by Dung, more Heat, and the Benefit of the Hoe.

The Natural Richness of the other sorts of Land being encreased by Hoing, and Cleansing it from Grass, *Luserne* will Thrive therein with the less Heat; for what the Soil wants of One of these Two Qualities, must be made up with the other; and it has grown high in Ho'd Rich Ground at *Christmas*, when that in Land of a Hotter Nature, but Poorer, has not been able to peep out, for want of more Nourishment: So if Rich Land be Clayey, very Wet, and Cold, tho' very Rich, it requires much Heat, for as High a Growth of *Luserne* at *Midsummer*.

The best Season of Planting it in *England*, I take to be Early in the Spring, for then there is always Moisture to make it Grow, and not Heat enough to Dry its tender Root, so as to kill it by Malting it.

If they should take so early a Season for the common way of Sowing it, the Ground would become Hard or Stale, before the Sun were High enough to bring it forward; but there is no danger of this Inconvenience to that where the Hoe is to come, and open the Ground as oft' as there should be Occasion.

I have planted it at the End of *February*; and tho' there follow'd a very hard Frost in *March*, which kill'd some Part of it; yet what remain'd was of a sufficient Thickness; and I believe the Quantity of Seed planted, might be after the Rate of betwixt One and Two Pounds to an Acre. The Depth it was Planted at was Half an Inch, which upon Trials I have found best for most sorts of fine Seeds. I do not approve of Planting it late in the Autumn; because our Long Winter might Kill too much of it, and Weaken the rest in its tender Infancy.

The

The Ho'd Plants of *Luserne* having larger Roots, and yielding more Crops than those of *St. Foin*, Reason seems to require that the Number of the former be less.

But on the other hand, if we consider, that as the *Luserne* Roots exceed the *St. Foin* in Bigness, so they also do in Length, by as great a Proportion; being generally less Taper, and as they go Deeper, they have more Earth to Nourish them. They also require a better Soil, and more frequent Aids from the Hoe; and by their extraordinary quick Growth, receive a speedier Relief from it, than the Roots of *St. Foin* do.

Thus if by reaching deeper in a better Soil, and being more Ho'd, *Luserne* receives from a square Perch of Ground, Nourishment in a Proportion Double to that whereby its Roots exceed those of *St. Foin* in Bigness, then I do not see why we should not leave the Number of *Luserne* Plants Double to the Number of those we leave in *St. Foin*.

But if the Excess of Nourishment were no more than the Excess of Bigness of Roots, I think an equal Number of Plants should be left in *Luserne* and in *St. Foin*; yet since the hot or cold Constitution of a Plant, and also the Quantity it can produce, ought to be consider'd as well as its Bulk, in relation to the Nourishment it requires, more Trials are necessary for determining the exact Number of *Luserne* Plants, proper to be plac'd on a square Perch, than have been hitherto made.

Perhaps it will be thought Heterodox to maintain by any Arguments, that to err in falling somewhat short of the just Number, is not of worse Consequence than exceeding it.

Where they stand at Four or Five Inches asunder in the Rows, 'tis observ'd that tho' the Intervals betwixt the Rows be wide, yet the Plants are much the Larger, and produce more that stand in the Outside Rows (the Ground without being Clean) and especially those at each End of the Outside Rows, that is, the Corner Plants are Largest of all. I need not say, that had all the other Plants as much Room and Tillage as the Corner Ones have, they would be as Large, and produce each as much Hay; for those which stand perfectly Single in Places by themselves, are seen to be Larger, and produce more than those Corner Ones; and of the Larger and Longer Roots our Stock does consist, the more Nourishment are they capable of taking, as has been shewn.

And it must be likewise observ'd, that the Crop will be produc'd in proportion to the Nourishment it receives; for if the most Gigantick *Luserne* Plant, which, when Pamper'd by the Hoe, has made a Produce more like a Tree than an Herb, remains a few Years without that or some equivalent Culture, it will by little and little cease to produce more than a few poor sickly Stalks, just to shew its Species, and then if this Culture be repeated, will recover its pristine Strength, and yield as great a Crop as ever; but if that be longer omitted will Die; the Vastness of its Root avails nothing, unless it has Food in Proportion to it.

Hence it appears, that the most fatal Disease incident to *Luserne* is Starving; and that rarely suffers any of its Plants to arrive at the full Period of their Growth or Age; it prevents their Fertility even in the Prime of their Youth, and kills them before they have liv'd out Half, or perhaps the Tenth Part of their Days: how long its Life might otherwise be, no body knows, unless a Plant could be found to die when well fed; for when it is, 'tis so tenacious of Life, that I am told Beheading will not dispatch it (1).

(1) But I have cut off the Heads of some my self to Try, and could not find that any One would sprout again, tho' *St. Foin* will; perhaps I try'd at a wrong Season.

'Tis

'Tis therefore necessary that our Rows be plac'd at such a Distance, as that their Intervals may be Wide enough for the Ho-Plow to raise an Artificial Pasture, sufficient to sustain the Number of Plants in them.

Whoever shall make Trials of this Husbandry (for that is all I propose to others) I would advise them to begin with Rows that have Intervals of Thirty Inches; for if they begin with much Narrower Distances, they may be by that means disappointed of Success; but tho' they should afterwards find a way to Hoe them at somewhat Nearer Distances; yet the loss of a few Perches of Ground would not be much, neither can they be wholly lost, since the Roots of these Plants may be prov'd to extend much farther Horizontally, than from Row to Row at that Distance. And the wider the Intervals are, the more Earth will be Till'd in a Perch of Ground; because Six Rows, which will be therein at Thirty Inches Distance, will admit the Ho-Plow to Till more Earth, than Nine Rows at Twenty Two Inches Distance from each other: And besides, 'tis not proper that, every time of Hoing, the Plow should come very near to the Plants, unless when Grass comes amongst them; and then they may in Thirty or Thirty Three Inch Spaces, be perfectly cleansed in this manner, *viz.* Plow a good Furrow from each Side of every Row, and then with Harrows, or other Instruments proper for that Purpose going Cross them, you will pull out both Earth and Grass from betwixt the Plants; then after a convenient time, Plow these Furrows back again to the Rows, this will in a manner transplant the upper part of the Roots, and bury the Grass tho' it be not Dead, by lying open to be dry'd by the Sun. Then Harrow the Ground to Break it more and to Level it, and go Once over it with a very light Roller, to the end that the Hay may be Raked up the cleaner.

I am aware of the common Prejudice, which is, that People, when they have never seen a Plantation of these Plants in perfection, are apt to form to themselves the Idea of such small Ones as they have been used to see; and thence imagine it impossible that this (tho' a Double) Number should be sufficient to make a Crop. But they might with equal Reason imagine the same of Apple Trees at a Year's growth, which are less than these at the same Age, and so plant a Thousand Trees in the Room proper for One. The Ancients direct the planting of Seventeen *Cythisus* Plants in a Perch of Ground; and I do not believe that ever those Seventeen could yield a Crop equal to Two Hundred Twenty-four *Luserne* Plants; for as many Bunches of Hay as each of these yields, so many Tun of Hay will One Crop of an Acre produce; thus by weighing the Product of One Plant (supposing them all equal) the Quantity of the Crop may be determin'd, and prov'd greater than Fancy from their Number represents.

	lb.	*d.*
April 14*th*, One single Unho'd Plant of *Luserne* had 31 Stalks, which by Silver Money weigh'd green — — — — — —	23	0
24*th*, The same dry'd to Hay, weigh'd — — — — — —	6	6
14*th*, The Stalks of One single Ho'd *Luserne* Plant green, weigh'd	56	0
24*th*, The same dry'd — — — — — — — — —	14	6
14*th*, Eighteen Inches in Length of a Row, being Five indifferent Plants, weigh'd green One Pound and a Half *Avoirdupois*.		
24*th*, Dry'd to Hay, it weigh'd — — — — — — —	28	6
25*th*, One Foot of a Ho'd Row, being One Hundred and Sixty Stalks of Two *Luserne* Plants of Six or Seven Years Old, weigh'd Two Pound green.		
But the same dry'd to the 9*th* of *May* weigh'd no more than —	31	6

Which Last is about Three Tuns to an Acre.

This

This I am certain of, That the least competent Number of Plants will bring the greatest Number of Crops; since I see the Stalks of a Single Ho'd Plant grow higher in Fifteen Days, than One amongst near Neighbours does in Thirty Days.

The greatest difference between the Culture of this and *St. Foin*, is, that *Luserne* Rows should be more grown, before the Plants be made Single in them by the Hand-hoe, lest the Fly should destroy some afterwards, and then they might become too Thin. For *Luserne* is sometimes eaten by the Fly, as Turneps are, tho' *St. Foin* be never liable to that Misfortune, if sown in a proper Season. *Luserne* must also be more frequently Ho'd (1) in some proportion to the more frequent Crops it produces.

I shall not go about to compute the difference of Expence bestow'd in the Roman Culture, and in This; yet it will appear theirs was incomparably more Chargeable, and that that excess of Charge was occasion'd by their Error in the Theory of Husbandry.

They Sow'd it so Thick that the Plants must needs be very small, and when Ten of them were no bigger than One good Single Ho'd Plant would have been, in the same space of the Earth's Surface, they could have but a Ninth Part of the Earth's Depth, which the one would have had. The defect of Depth must be therefore made up in some measure by the extraordinary Richness of the Surface, upon this Account few Lands were capable of bearing *Medica*. Their Sowing it so late, made the first Waterings necessary, and the Shortness of the Roots required the repeated Rigations, after the Crops were cut: for *Columella* saith in *Lib. 2. Cap. 11. Cum secueris autem, sæpius eam Rigato.* But had it been Cultivated by the Hoing Method, the Tap-Roots would have descended as Deep as a Well, and from the Springs below have sent up Water to the Plants, besides what the Hoe would have caused the Horizontal Roots to receive from Dews at the Surface above. At how much a Cheaper Rate, Water is supply'd by these means, than by carrying it perhaps a great way, and then sprinkling it by hand over the Beds, which were made Ten Foot wide between Path and Path for that purpose, let any One judge. As also what a laborious Task it was to Pick out the Grass with Fingers from amongst it, in the hard dry Ground in the Summer, after Mowing the Crop, as *Columella* directs in his foremention'd Chapter, which the Horse-Hoe would have done with Ease at a Twentieth Part of that Expence. However since they saw the *Medica* was as impatient of Grass as the Vineyards were, 'tis wonder they did not give it the same Culture with the Bidens, which would have been much better and cheaper, than to cleanse the *Medica* with Fingers. Indeed Fingers were made before the Bidens, but sure the effect of its use in raising Juices to the Vine, had inspired the Romans with more judicious Speculations, than to give that for a Reason why they Ho'd the *Medica* with their Fingers, rather than with the Bidens.

Oh! But this was made with Iron, and *Medica* had in those Times an Antipathy to Iron; and after it was sown, the Place must not be touch'd by that Metal; therefore the Seed must not be cover'd with a Plow, nor with Iron

(1) The Ho-Plow is the Instrument to bring it to Perfection; but then I doubt it must lie still some Years, lest the plow'd Earth injure the Hay that is made upon it; and when it is come to a Turf, and the *Luserne* wants renewing, the Four Coulter'd Plow is the only Instrument that can prepare the Turf to be kill'd, and cure the *Luserne*; which Plow must be used in the following manner: Turn its Furrows toward one Row, and from the next: that is, Plow round one Row, and that will finish Two Intervals, and so on; and the next plowing must be towards those Rows, from whence they were turn'd the first time; take care the first Furrows do not lie long enough on the Rows to kill the Plants, which will be much longer in Winter than in Summer.

 Harrows,

Harrows. But if they had made Trials enough, to know that Half an Inch was the proper Depth to cover this Seed at, these *Virtuosi* would have been convinc'd, that it had no less Antipathy to these Instruments, of what *Matter* soever they were made, if they bury'd it Five or Six Inches Deep, which the Plow must do, and the Weight of Iron Harrows in such fine Ground, not much less. Had the Plow been all of Wood, the Furrow would have lain never the lighter upon the Seed; and if the wooden Harrows had been loaded with a Weight capable of Pressing it down as deep, it would have been no more able to Rise, than if it had been buried with Iron Harrows: This *Columella* seems to be sensible of when he says, *Rastellis Ligneis, viz.* That it was not sufficient for them to be made of Wood, unless they were Diminitive, for then they were light ones. 'Tis probable the Plow suffer'd none to come up, and the heavy Harrows very few, tho' perhaps Plants enough, had they calculated what Number were sufficient: But unless the Ground were Cover'd with them at first, it seems they had not Patience to wait 'till the Plants grew large enough, to fill it with a bare competent Number; and thought it not worth while to Weed and Water, what they fancy'd to be an insufficient Number. 'Twas expected that the Thickness of the Plants should help to kill the Grass; yet upon due Observation 'tis found, that when their excessive Numbers have brought a Famine amongst them, they are forc'd to prey upon one another; and 'tho the stronger survive, yet even those are so weaken'd by Hunger, that they become the less able to contend with Grass, whose good Fortune it was, that Superstition would not permit the Romans to interpose, by attacking it with Iron Weapons.

I hope these Hints may be improv'd for the Abolition of old Errors, and for the Discovery of new Truths; to the end that *Luserne* may be planted in a more reasonable Method than has been commonly practis'd: And when the Theory is true, 'tis impossible the Practice should be false, if rightly apply'd; but if it fail of Success, the Event will be a Proof either of a Misapplication, or that the Theory is false.

Luserne should be order'd for Hay in the same manner, as is directed for *St. Foin* in the foregoing Chapter: But it must be observ'd, that *Luserne* is more worsted by being suffer'd to survive its Virginity before Cutting; and therefore the Richest and most Nourishing Hay is cut whilst the Stalks are Single, without any collateral Branches shooting out of them; and when they are so, neither Blossoms nor even their Buds appear. But of that sown in the old fashion, the last Crops for want of a new supply of Nourishment grow so slowly, that e're 'tis high enough to be cut, the Blossoms are blown out, and the Stalks tho' very small, are become *Woody*, *Hard*, and *Dry*, and make the Hay nothing near so nourishing as that of the first Crops.

But in that which is Ho'd, the last Crops of it will by virtue of the greater Quantity of Nourishment it receives grow faster, and be of a height fit to cut before Blossoming, and thence being as young and vigorous, make as good Hay as the first Crops; so that Hoing does not only procure more and larger Crops, but also better Hay.

This is most certain, that unless we can keep our *Luserne* pretty clean from Natural Grass, we cannot expect it to succeed, let the Soil be never so proper.

The

The following Five Chapters have been formerly Publish'd as a SPECIMEN.

Chap. XVI. Of Change of SPECIES.

I. *That Plants of the most different Nature, feed on the same Sort of Food.*
II. *That there is no Plant but what must rob any other Plant within its Reach.*
III. *That a Soil which is proper to one Sort of* Vegetable, *once, is, in respect of the Sort of Food it gives, proper to it, always.*

IF any one of these *Three Propositions* be true, as I hope to prove all of them are, then it will follow, that there is no need to change the Species of *Vegetables* from one Year to another, in respect to the different Food the same Soil is, tho' falsely, supposed to yield (1).

The common Opinion is contrary to all these (as it must be if contrary to any one of them) And since an Error in this fundamental Principle of *Vegetation* is of very ill Consequence; and since Doctor *Woodward*, who has been serviceable in other Respects (2) to this Art, has unhappily fallen in with the Vulgar in this Point, his Arguments for this Error, require to be answer'd in the first Place.

The Doctor says, (3) 'It is not possible to imagine how one uniform, homogeneous Matter having its Principles, or Original Parts all of the same Substance, Constitution, Magnitude, Figure and Gravity, should ever constitute Bodies so egregiously *unlike*, in all those Respects, as Vegetables of different Kinds are; nay, even as the different Parts of the *same* Vegetable.

'That there should be that vast Difference in them, in their several Constitutions, Makes, Properties, and Effects, and yet all arise from the very same Sort of Matter, would be very strange.

Answer. 'Tis very probable, that the Terrestrial Particles which constitute *Vegetables*, tho' inconceivably Minute, may be of great Variety of Figure and other Differences, else they could not be capable of the several Ferments, *&c.* they must undergo in the Vessels of Plants. Their Smallness can be no Objection to their Variety, since even the Particles of Light are of various Kinds.

But as the Doctor asserts, 'That each Part of the same *Vegetable* requires a peculiar specifick Matter for its Formation and Nourishment; and that there are very many and different Ingredients go to the Composition of the same individual Plants.

From hence must be inferred, that the same Plant takes in very many and different Ingredients (and it is proved, that no Plant refuses any Ingredient that is capable of entering its Roots.) (4) Tho' the Terrestrial Particles

(1) For if all Plants rob one another, it must be because they all feed on the same Sort of Food; and admitting they do, there can be no Necessity of changing the Species of them, from one Soil to another; but the same Quantity of the same Food, with the same Heat and Moisture which maintains any Species one Year, must do it any other Year.

(2) By proving in his Experiments, that Earth is the *Pabulum* of Plants.

(3) In Philos. Transf. N. 253.

(4) Dr. *Grew*, in his Anatomy of Plants by Microscopical Inspection, found, that the outer Superficies of Roots was of a spongy Substance; and 'tis well known that no such Body can refuse to imbibe whatever Liquor comes in contact with it, but will by its springy Porosity absorb any Sort of Moisture.

 which

which nourish *Vegetables*, be not perfectly homogeneous, yet most of the various Tastes and Flavours of Plants are made in, and by the Vessels (1).

Doctor *Woodward* says, 'That Water will pass Pores and Interstices, that 'neither Air, nor any other Fluid will; this enables it to enter the finest Tubes 'and Vessels of Plants, and to introduce the Terrestrial Matter, conveying it 'to all Parts of them; whilst each, by Means of Organs 'tis endow'd with for 'the Purpose, intercepts and assumes into it self, such Particles as are suitable 'to its own Nature; (2) letting the rest pass on *through the common Ducts*.

Here then he says plainly, That each Plant receives the Terrestrial Matter in Gross, both Suitable and Unsuitable to its Nature, retains the Suitable Particles for its Augment, and the Unsuitable lets pass through it. And in another Place, he says, they are exhal'd into the Atmosphere.

And this will appear to be the true Case of Plants; and directly contradicts what he advances, in saying, 'That each Sort of Grain takes forth that peculiar 'Matter that is proper for its own Nourishment. First, the Wheat draws off 'those Particles that suit the Body of that Plant, *the rest lying all quiet and un-'disturb'd the while*. And when the Earth has yielded up all them, those that 'are proper for Barley, a different Grain, remain still behind, till the successive 'Crops of that Corn fetch them forth too; and so the Oats and Pease in their 'turn, till, in fine, all is carry'd off.

In the former Paragraph he says, Each Plant *lets pass through it* the rest of the Particles that are not suitable to its own Nature. In the latter Paragraph he says, That each *leaves* the Unsuitable *all behind* for another Sort; and so on.

Both cannot be true.

If the latter were True, Change of Sorts would be as necessary as it is commonly thought. But if the former be True, as I hope to prove it is, then there can be no Use of Changing of Sorts in respect of different Nourishment.

If in this Series of Crops each Sort were so Just at to take only such Particles, as are peculiarly proper to it, letting all the rest alone to the other Sorts to which they belonged, as the Doctor imagines; then it would be equal to them all, which of the Sorts were sown first or last: But let the Wheat be sown after the Barley, Pease, and Oats, instead of being sown before them, and then it would evidently appear, by that starv'd Crop of Wheat, either that some or all of those other Grains, had violated this natural Probity, or else that Nature has given to *Vegetables* no such Law of *Meum* and *Tuum* (3). If

(1) We are convinced, that 'tis the Vessels of Plants that make the different Flavours; because there is none of these Flavours in the Earth of which they are made, until that has enter'd and been alter'd by the Vegetable Vessels.

(2) If the Doctor's Plants were so nice in leaving Vegetable Matter *behind, quiet and undisturb'd*, 'tis a wonder they would take up the Mineral Matter, as he says they did that kill'd themselves with Nitre.

These Plants might with much less Difficulty have distinguish'd the Mineral Matter from the Vegetable Matter, than they could distinguish the different Particles of Vegetable Matter from one another, and must have been very unwise to choose out the Nitre (their Poison) from the Water and Earth, and to leave the Vegetable Particles behind; none of which could be so improper to them as the Nitre.

It may, perhaps, be objected, that such like pernicious Matter kills a Plant by only destroying its Roots, and by cloting the Pores which prevents the Nourishment from entering to maintain its Life; and that such Matter doth not it self enter to act as Poison upon the Sap, or upon the Vessels of the Body, or Leaves: But it plainly appears that it doth enter, and act as Poison; for when some of the Roots of a Mint, growing in Water, are put into Salt Water, it kills the whole Plant, although the rest of the Roots remaining in the Fresh Water were sufficient to maintain it, if the other Roots had been cut off at the time they were removed into the Salt Water; and also all the Leaves, when dead, will be full of Salt.

Or if the Juice of wild Garlick-Seed be made Use of instead of the Salt Water, it will have the same Effect; and every one of the Mint Leaves will have a strong Taste of Garlick in it.

(3) A Charlock could not rob a Turnep, and starve it more than several Turneps can do, unless the Charlock did take from it the same Particles which would nourish a Turnep; and unless the Charlock did devour a greater Quantity of that Nourishment than several Turneps could take.

Flax, Oats, and Poppy, could not burn or waste the Soil, and make it less able to produce succeeding Crops of different Species; unless they did exhaust the same Particles, which would have nourish'd Plants of

If these Things were as the Doctor affirms, why do Farmers lose a Year's Rent, and be at the Charge of Fallowing and Manuring their Land, after so few Crops; since there are many more Sorts of Grain as different from these and one another, as those are which they usually sow?

They still find that the first Crops are best, and the longer they continue Sowing, the worse the last Crops will prove, be they of never so different a Species; unless the Land were not in so good Tilth for the first Crop as for the subsequent; or unless the last sown be of a more robust Species.

This Matter might be easily clear'd, could we perfectly know the Nature of those supposed *unsuitable* (1) *Particles*; but, in Truth, there is no more to be known of such of them, than that they are carried away by the Atmosphere to a Distance, according to the Velocity of the Air; perhaps several Miles off, at least, never like to return to the Spot of Ground from whence the Plants have raised them.

But suppose these cast-off Particles were, when taken in, unfit for the Nourishment of any manner of Vegetables: Then the Doctor must fancy the Wheat to be of a very scrupulous Conscience, to feed on these Particles, which were neither fit for its own Nourishment, nor of any other Plant; and at the same time to forbear to take the Food of Barley, Pease, and Oats, letting that *lie still, and undisturb'd the while*, as he says it does, tho' he gives no manner of Reason for it.

'Tis needless to bring stronger Arguments, than the Doctor's Experiments afford, against his own vulgar Opinion, of Plants distinguishing the particular Sort of Terrestrial Matter, that, he says, is proper to each Sort of *Vegetable*, in these Words, *viz.* 'Each Sort takes forth that peculiar Matter that is proper 'for its own Nourishment, the *rest lying all quiet and undisturb'd the while*.'

He says, That *great Part* of the Terrestrial Matter, mixed with the Water, passes up into the Plant along with it; which it could not do, if only the *peculiar* Matter proper to each Plant, did pass up into it: And after he has shewed how apt the *Vegetable Matter* is to attend Water in all its Motions, and to follow it into each of its Recesses; being by no Filtrations or Percolations wholly separable from it; 'tis strange he should think that each Plant leaves the greatest Part of it behind, separated from the Water which the Plant imbibes.

There are, doubtless, more than a Million of Sorts of Plants, all of which, would have taken up the Water, and had each as much Right to its Share, or proper Matter in it, as the Doctor's Plants had; and then there would be but a very small (or a Millionth) Part of it proper to each of his Plants, and these leaving all the rest behind, both of the Water wherewith the Glasses at first were filled, when the Plants were put into them; and also of all the additional Water daily supply'd into them afterwards: I say, So much more Terrestrial Matter brought into these Glasses, in Proportion to the added Water, and so very small a Part as could be proper to each of his Plants being carried off;

of different Species: For let the Quantity of Particles, these Burners take, be never so great, the following Crops would not miss them, or suffer any Damage by the Want or Loss of them, were they not the same Particles, which would have nourish'd those Crops, if the Burners had left them *behind, quiet and undisturbed*. Neither could Weeds be of any Prejudice to Corn, if they did draw off those Particles only that suit the Bodies of Weeds, *the rest lying all quiet and undisturb'd the while*. But constant Experience shews, that all Sorts of Weeds, more or less, diminish the Crop of Corn.

(1) But we must not conclude, that these Particles, which pass through a Plant (being a vastly greater Quantity than those that abide in it for its Augment) are all unsuitable, because no one of them happens to hit upon a fit *Nidus*: For since the Life of Animals depends upon that of Plants, 'tis not unreasonable to imagine, that Nature may have provided a considerable Overplus for maintaining the Life of individual Plants, when she has provided such an innumerable Overplus for continuing every Species of Animals.

 there

there must have remain'd in these Glasses a much greater Quantity of Terrestrial Matter at the End of the Experiment, than remained in the Glasses *F* or *G*, which had no Plants in them, nor any Water added to, or diminished from them; but the quite contrary appear'd. 'And the Water in the Glasses *F* and *G* at 'the End of the Experiment, exhibited a larger Quantity of Terrestrial Matter, 'than any of those that had Plants in them did. The Sediment at the Bottom 'of the Glasses was greater, and the *Nubeculæ* diffused thro' the Body of the 'Water thicker." Had the *Cataputia* insum'd with the Two Thousand Five Hundred and One Grains of Water, no more than its proper Share of the *Vegetable Matter*, it could not have attained thence an Increase of three Grains and a Quarter, nor even the thousandth Part of one Grain. But he found, 'This Terrestrial Matter, contained in all Water, to be of two Kinds: The 'one properly, a *Vegetable Matter*, but consisting of very different Particles, '*some* of which are proper for the Nourishment of some Kinds of Plants, *others* 'for different Sorts, *&c.*'

This, indeed, would have been a most wonderful Discovery, and might have given us a great Light, if he had told us in what Language and Character these proper Differences were stamp'd or written upon the *Vegetable Particles*; which Particles themselves, he says, were scarce visible. Certainly it must be a great Art (much beyond that of Doctor *Wallis*) to decypher the Language of Plants, from invisible Characters.

Doctor *Woodward* seems to have had as good Eyes, and as strong an Imagination, as the Old Woman, who saw the Needle upon the Barn, but could not see the Barn.

I will, by no means, call in Question the Veracity of so learned and good a Man; and therefore am willing to believe he made this extraordinary Observation in his Sleep.

But that this Dream may deceive none, except such who are very fond of old Errors, there is an *Experimentum Crucis* which may convince them, *viz.* At the proper Season, tap a Birch-Tree in the Body or Boughs, and you may have thence a large Quantity of clear Liquor, very little altered from Water; and you may see that every other Species of Plants, that will grow in Water, will receive this; live, and grow in it, as well as in common Water. You may make a like Experiment by tapping other Trees, or by Water distilled from Vegetables, and you will find no Species of Plants, into which this Water will not enter, and pass through it, and nourish it too, unless it be such a Species as requires more Heat than Water admits; or unless the peculiar Vessels of that it has first passed through, have so altered the *Vegetable Particles* contained in that Water, as that it acts as Poison upon some other particular Species.

The Doctor concludes, 'That Water is only the *Agent* that conveys the '*Vegetable Matter* to the Bodies of Plants, that introduces and distributes it to 'their several Parts for their Nourishment. That *Matter* is *sluggish* and *inactive*, 'and would lie eternally *confin'd* to its *Beds* of Earth, without ever advancing 'up into Plants, did not Water, or some like Instrument, fetch it forth, and '*carry* it unto them.

That Water is very capable of the Office of a Carrier, to Plants, I think the Doctor has made most evident; but as to the Office of such an Agent as his Hypothesis bestows upon it, it seems impossible to be executed by Water. For it cannot be imagined that Water, being it self but meer *Homogenial Matter*, void of all Degrees of Life, should *distinguish* each Particle of *Vegetable Matter*, proper and peculiar to every different Species of Plants, which are innumerable;

ble; and when 'tis to act for the Wheat, to find out all the Particles proper to that Sort of Grain, to rouse only those particular *Sluggards* from their *Beds* of Earth, *letting all the rest lie quiet and undisturbed the while.* This *Agent* frees the Wheat Particles from their *Confinement*, and conveys, introduces, and distributes them, and only them, into the several Parts of the Wheat.

Certainly no Mortal, except Doctor *Woodward*, can pretend to distinguish the Particles of *Vegetable Matter* by any Characters, Hieroglyphicks, or other manner whatever, so as to determine to what Species, or Class of Plants, they are severally proper and *peculiar*; neither is it probable, that any Botanist is acquainted with half the distinct *Species* of *Vegetables*. Yet all the *Vegetable Particles* and *all* the *Species* of Vegetables, must be perfectly and distinctly known by Water, before it be capable of performing such a nice Task of an *Agent*; else, when Wheat, Barley, and Oats, are all growing together, in the same Foot of Ground, with their Roots so intangled together, that no Man can possibly distinguish the one from the other, by viewing the Roots; How should this insensible *Agent* be punctual in delivering to each its own proper Particles? For, tho' the *Agent* had most exactly executed a Commission of *disturbing* the *Inactivity* of these three Sorts of Particles only; yet, when it had fetch'd them forth, if it should err in the Delivery of them, and carry the Wheat-Particles to the Barley, and those of Barley to the Oats, it would be a Mistake of worse Consequence, according to the Doctor's Opinion, than that of the *London* Undertaker's, who being to interr an old Man in *Northumberland*, and a young Lady in *Cornwall*, carried the Man to *Cornwall*, and the Lady to *Northumberland*: Her Mother, for Mitigation of Grief, would not be satisfied without a last Sight of her Daughter's Corpse; but when the Coffin was opened, the Error was discover'd by the indubitable Criterion of an old shrivel'd Face, with a huge grey Beard. 'Tis no real Injury to a Person deceas'd, if the Place of his Burial be mistaken; but if Water should mistake thus in the Taking up, Carrying, and Delivery of *Vegetable Particles*, all Plants would be (upon the Doctor's Hypothesis) starv'd or poison'd, and Animals could not long survive all Plants. But since all the different Species of Plants do continue to live, their Life proves, that the *Vegetable Particles* of Earth are not proper, but *common* to them all for their Nourishment, if these Particles are taken up, carried and introduced into the *Vegetable* Vessels by Water; which is capable of distinguishing neither different *Vegetable Particles*, nor different *Vegetables*.

Since 'tis unreasonable to believe, that Water can have such extraordinary Skill in *Botany* or in *Micrography*, as to be qualified for a sufficient Agent in such an abstruse Matter, I conceive Water to be only an Instrument or Vehicle, which takes up indifferently any Particles it meets with (and is able to carry) and advances them (or the *Pabulum* they yield) up into the first Plant whose Roots it comes in Contact with; and that every Plant it meets with, does accept thereof, without distinguishing any different Sorts or Properties in them, until they be so far introduc'd and advanc'd up into the *Vegetable* Vessels, that it would be in vain to distinguish them; for whether the Terrestrial Matter, Plants imbibe with the Water, will kill or nourish them, appears by its Effects; but which cannot be foreknown or prevented without the Help of Faculties, which Plants are not endow'd with.

Mr. *Bradley* seems to have carried this Error farther than any Author ever did before; but he supports it by Affirmations only, or by such Arguments (I cannot say Reasons, for no Reason can be against any Truth) as go near to confute the very Opinion he pretends to advance by them.

He ascribes to *Vegetables* the Sense of Taste, by which, he thinks they take

 such

ſuch Nouriſhment as is moſt agreeable to their reſpective Natures, refuſing the reſt; and will rather ſtarve than eat what is diſagreeable to their Palate.

In the Preface to his *Vol.* I. *Page* 10. of his *Husbandry and Gardening*, he ſays, 'They feed as differently as Horſes do from Dogs, or Dogs from Fiſh.

But what does he mean by this Inſtance *Vol.* I. *p.* 39? *viz.* 'That Thyme, 'and other Aromaticks, being planted near an Apricot-Tree, would deſtroy 'that Tree; helps to confirm, that every Plant does not draw exactly the ſame 'Share of Nouriſhment?

I believe there is no need for him to give more Inſtances to diſprove his Aſſertion than this one. His Concluſion, taken by it ſelf, is ſo far right, *viz.* 'That if the Nouriſhment the Earth afforded to the Thyme and Apricot-Tree, 'had been *divided* into two Shares, both could not have had them.

But this his Inſtance proves, that thoſe Aromaticks robb'd the Apricot-Tree of ſo much of its Share as to ſtarve it; and that they, tho' of ſo very different a Nature, did draw from the Earth the ſame Nouriſhment which the Apricot-Tree ſhould have taken for its Support, had not the Aromaticks been too hard for it, in drawing it off for their own Maintenance.

Unleſs he believes that all the Juices of the Aromaticks were as Poiſon to the Apricot, and that, according to my Experiment of the Mint, mark'd (h), ſome of their Roots might diſcharge ſome kind of Moiſture in dry Weather, given them by others, that had it for their Uſe; and that the Apricot Roots, mingling with them, might imbibe enough of that Liquor, altered ſufficiently by their Veſſels, to poiſon and kill the Tree.

But then, Where was the Tree's diſtinguiſhing Palate? Why did it not refuſe this Juice, which was ſo diſagreeable as to kill it? And as to his Notion of *Vegetables* having Palates, let us ſee how it agrees with what he affirms.

'That 'tis the Veſſels of Plants that make, by their Filtrations, Percolations, '*&c.* all the different Taſtes and Flavours of the Matter, which is the Aliment 'of Plants; and that before it be by them ſo filtred, *&c.* it is only a Fund of '*inſipid Subſtance*, capable of being altered by ſuch Veſſels, into any Form, 'Colour, or Flavour.

And *Vol.* I. *p.* 38. 'The different Strainers, or Veſſels of the ſeveral Plants, 'growing upon that Spot of Earth, thus impregnated with Salts, alter thoſe 'Salts or Juices, according to the ſeveral Figures or Dimenſions of their Strain-'ers; ſo that one Plant varies, in Taſte and Smell, from others, tho' all draw 'their Nouriſhment from the ſame Stock lodged in the Earth.' See Mr. *Bradley's Palates of Plants*, and the *Inſipid Subſtance* he allots them to diſtinguiſh the *Taſte* of, how they agree.

They muſt, it ſeems, within their own Bodies, give the Flavour to this inſipid Subſtance, before their Palates can be of any Uſe; and even then, 'tis impoſſible to be of any Uſe, but in the manner of the Dog returning to his *Vomit*.

They would have as much Occaſion for the Senſe of Smelling, as of Taſte; but after all, of what Uſe could either of the two be to Plants, without local Motion of their Roots, which they are ſo deſtitute of, that no Mouth of a Root can ever remove it ſelf from the very Point where it was firſt formed, becauſe a Root has all its Longitudinal Increaſe at the very End; for ſhould the Spaces betwixt the Branchings increaſe in Length, thoſe Branches would be broken off and left behind, or elſe drawn out of their Cavities, which muſt deſtroy the Plant. All the Branches, except the foremoſt, would be found with their Extremities pointing towards the Stem; the contrary of which Poſture they are ſeen to have: And if they moved backwards, that would have much the ſame Effect on all the Collateral Branchings to deſtroy them. Smell and Taſte

Taſte then could be of no manner of Uſe to *Vegetables*, if they had them; they would have no Remedy or Poſſibility to mend themſelves from the ſame Mouths, removing to ſearch out other Food, in caſe they had Power to diſlike or refuſe what was offered them.

Therefore, the crude Earth being their Food, ſimple and free from any Alterations by Veſſels, remaining inſipid, cannot give, neither can Plants receive, require, or make Uſe of, any Variety from it, as Animals do from their Diet. It would be loſt upon them, and Nature would have acted in vain, to give Smell and Taſte to *Vegetables*, and nothing but inſipid Earth for an Object of them; or to give them a charming Variety of Reliſh and Savour in their Food, without giving them Senſes neceſſary to perceive or enjoy them; which would be like Light and Colours to the Blind, Sound and Muſick to the Deaf; or like giving Eyes and Ears to Animals, without Light or Sound to affect them.

The Mouths of Plants, ſituate in the Convex Superficies of Roots, are analogous to the Lacteals, or Mouths, in the Concave Superficies of the Inteſtines of Animals.

Theſe ſpongy Superficies of Animal Guts, and Vegetable Roots, have no more Taſte or Power of refuſing whatever comes in Contact with them, the one than the other.

The free open Air would be equally injurious to both; and if expoſed to it, it would dry and cloſe up the fine Orifices in Guts and Roots; therefore Nature has guarded both from it.

Nature has alſo provided for the Preſervation of both Vegetables and Animals (I do not ſay equally) in reſpect of their Food, which might poiſon them, or might not be fit to nouriſh them.

The Security of Plants (the beſt that can be) is their Food it ſelf, Earth; which having been altered by no Veſſels, is always ſafe and nouriſhing to them: For a Plant is never known to be poiſoned by its own natural Soil, nor ſtarved, if it were enough of it with the requiſite Quantities of Heat and Moiſture.

Roots being therefore the Guts of Plants, have no need to be guarded by Senſes; and all the Parts and Paſſages, which ſerve to diſtinguiſh and prepare the Food of Animals, before it reach the Guts, are omitted in Plants, and not at all neceſſary to them.

But as the Food of moſt Animals is Earth, very variouſly changed and modified by Vegetable or Animal Veſſels, or by both, and ſome of it is made wholeſom, ſome poiſonous; ſo that if this doubtful Food ſhould be committed to the Inteſtines, without Examination, as the pure unaltered Earth is to Roots, there would, in all Probability, be very few Animals living in the World, except there be any that feed on Earth at firſt Hand only, as Plants do.

Therefore, leſt this Food, ſo much more refined than that of Plants, ſhould, by that very Means, become a fatal Curſe, inſtead of a Bleſſing, to Animals, Nature has endowed them with Smell and Taſte, as Sentinels, without whoſe Scrutiny theſe various uncertain Ingredients are not admitted to come where they can enter the Lacteals, and to diſtinguiſh, at a ſufficient Diſtance, what is wholeſom and friendly, from what is hurtful; for when 'tis once paſſed out of the Stomach into the Guts, 'tis too late to have Benefit from Emeticks; its Venom muſt then be imbibed by the Lacteal Mouths, and mix with the Blood, as that muſt mix with the Sap, which comes in Contact with the Lacteals in the Superficies of Roots, Nature having left this unguarded.

Yet, Plants ſeem to be better ſecured by the Salubrity and Simplicity of their Food, than Animals are by their Senſes; To compenſate that Inequality of

of Danger, Animals have Pleasure from their Senses, except some miserable Animals (and such there are) that have more Pain than Pleasure from them. But, I suppose, more Animals than Plants are poison'd; and that a poisonous Animal is less fatal to a Plant, than a poisonous Plant is to an Animal. An Instance of this I have been told, by very credible Persons, that a Man walking in a Garden, gathered a Sprig of Sage, and eat it, which soon brought upon him the Symptoms of Poison, and Death. They dug up the Root of Sage, and found a Toad under it.

Some of the Effluvia, or Excrementitious Juices of this loathsom Animal, had passed the Vessels of that wholesom Plant, without any apparent Injury to it, tho' all its Strainers were not able to correct the Venom.

Here I remark, that the Mint *(E)* suffered more pestiferous Effects from the Garlick, of its own Genus, than the Sage did from the Toad, tho' of a different Genus.

It kill'd the Man, but was not strong enough to kill the Sage. This shews, that Plants have not occasion of Palates, as Animals have.

I say no more of Mr. *Bradley's Vegetable Palates*; I proceed to some other Arguments against the Necessity of Changing Sorts of *Vegetables*, on Account of their taking different Nourishment.

It being sufficiently proved, That every Sort of *Vegetables* growing in the same Soil, takes, and is nourished by the same Sort of Food; it follows from hence, That the beneficial Change of Sorts of Seeds or Plants, we see in the common Husbandry, is not from the Quality of the Sorts of Food, but from other Causes; such as,

I. *Quantity of the Food.*
II. *Constitution of the Plants.*
III. *Quantity of the Tillage.*

In Doctor *Woodward's* Case, upon his Hypothesis, the three Proportions of Seeds, *viz.* Barley, Oats, and Pease, might be sown all together in the same Acre of Ground, the same Year, and make three as good Crops as if sown singly in three successive Years, and his two Crops of Wheat in one Year likewise. But every Farmer can tell, that these three Proportions of Seed would not yield half the Crop together, as one would do single; and would scarce produce more than to shew what Grains were sown, and which of the Sorts were the strongest, and the most able, Robber.

Though this Failure would, in Truth, be from no other Cause than want of the sufficient Quantity of Food, which those three Crops required; yet, perhaps, the Doctor might think that all three Crops might succeed together very well, taking each its proper Nourishment, were it not for want of *Room*, *Air*, and *Sun*.

I have been credibly inform'd, that on one Perch of Ground there has grown a Bushel of Corn, which is twenty Quarters to an Acre. Mr. *Houghton* relates twenty-six, and even thirty Quarters of Wheat on one Acre. There has certainly grown twelve Quarters of Barley to an Acre, throughout a whole Field: Therefore, unless a Crop exceed the least of these, or, indeed, the greatest of them (if the Relation be true) a Crop cannot fail for want of Room; for one Acre (be it of what Nature it will, as to the Soil of it) must have as much Room for a Crop to grow on, as any other Acre.

Then there was Room for all Doctor *Woodward's* three Crops together, to produce as much as three common Crops do. Yet all these together will scarce yield one Quarter of Corn, tho' there is Room, at least, for twelve.

The

The same *Air* and *Sun* that had Room to do their Office to Mr. *Houghton's* Acre, why should they not have Room to do the same to Doctor *Woodward's* Acre, when the three Crops growing on it at once, though pretty good ones, might require less Room than Mr. *Houghton's* Crop did?

I perceive that those Authors, who explain *Vegetation*, by saying the Earth imbibes certain Qualities from the Air, and by Specifick Qualities, and the like, do also lay a great Stress upon the *Perpendicular* Growth of *Vegetables*; seeming to fancy there is little else necessary to a good Crop, but Room.

Mr. *Bradley*, in his Arguments concerning the Value of a Hill, does implicitly say as much.

But if they would but consider the Diameters of the Stems, with the Measure of the Surface of an Acre, they would be convinced, that many, even of Mr. *Houghton's* Crops, might stand in a perpendicular Posture upon an Acre, and Room be left.

One true Cause of a Crop's Failing, is want of a Quantity of Food to maintain the Quantity of *Vegetables* which the Food should nourish.

When the Quantity of Food which is sufficient for another Species (that requires less) but not for that which last grew, to grow again the next Year, then that other is beneficial to be planted after it.

The second true Cause is from the Constitution of Plants; some require more Food than others, and some are of a stronger Make, and better able to penetrate the Earth, and forage for themselves.

Therefore Oats may succeed a Crop of Wheat on strong Land, with once Plowing, when Barley will not; because Barley is not so well able to penetrate as Oats, or Beans, or Pease are.

So a Pear-Tree may succeed a Plumb-Tree, when another Plumb-Tree cannot; because a Pear is a much stronger Tree, and grows to a much greater Bulk, so inclined to be a Giant, that 'tis hard to make it a Dwarf; and will penetrate and force its Way thro' the untill'd Earth, where the other cannot, being of a weaker and less robust Constitution, not so well able to shift for it self.

The Pear could penetrate Pores that the other could not. Mr. *Evelyn* says, in his Discourse of Forest-Trees, 'That a Pear will strike Root thro' the rough-'est and most impenetrable Rocks and Clifts of Stone it self.' He says likewise, in his *Pomona*, 'That Pears will thrive where neither Apple or other 'Fruit could in Appearance be expected.'

I can scarce think, that a large Plant takes in larger Particles than a small one for its Nourishment; if it did, I can't believe, that the Thyme could have starv'd the Apricot-Tree; it must have left the larger Particles of Food for that Tree, which probably would have sufficed to keep it alive; I rather think, that great and small Plants are sustain'd by the same minute Particles: For as the fine Particles of Oats will nourish an *Ox*, so they will nourish a *Tom-Tit*, or a *Mite*.

Some Plants are of a hotter Constitution, and have a quicker Digestion, like Cormorants or Pigeons, devouring more greedily, and a greater Quantity of Food than those of a colder Temperature, of equal Bulk, whose Sap having a more languid Motion, in Proportion to the less Degree of Heat in it, sends off fewer Recrements, and therefore a less Supply of Food is required in their Room. This may make some Difference in the one's succeeding the other; because the hot-constitution'd leaves not enough for its own Species to succeed again, but leaves enough for a Species of a colder Constitution to succeed it.

But the third and chiefest Cause of the Benefit of changing Sorts, is Quantity of *Tillage*, in Proportion to which the Food will be produced.

The

The true Cause why Wheat is not (especially on any strong Soil) to be sown immediately after Wheat, is, That the first Wheat standing almost a Year on the Ground, by which it must grow harder; and Wheat Seed-Time being soon after Harvest in *England*, there is not Space of Time to Till the Land so much as a Second Crop of Wheat requires.

Tho' sometimes in poorer Land that is lighter, Wheat has succeeded Wheat with tolerable Success, when I have seen on very rich strong Land, the first Crop lost by being much too big, and one following it immediately, quite lost by the Poorness of it, and not worth Cutting.

This was enough to satisfy, that the *Tillage* which was so much easier perform'd in less time, sufficed for the light Land, but not for the strong; and if the strong Land could have been brought into as good Tilth as the light, (like as in the *New Husbandry* it may) it would have produced a much better Second Crop than the light Land did.

From all that has been said, these may be laid down as Maxims, *viz.* That the same Quantity of *Tillage* will produce the same Quantity of Food in the same Land: *And*, That the same Quantity of Food will maintain the same Quantity of *Vegetables*.

'Tis seen, that the same Sort of Weeds which once come naturally in a Soil, if suffer'd to grow, will always prosper in Proportion to the *Tillage* and Manure bestow'd upon it, without any Change. (And so are all manner of Plants that have been yet try'd by the *New Husbandry*, seen to do).

A Vineyard, if not Tilled, will soon decay, even in rich Ground, as may be seen in those in *France*, lying intermingled as our Lands do in Common Fields. Those Lands of Vines, which by Reason of some Law-Suit depending about the Property of them, or otherwise, lie a Year or two Untilled, produce no Grapes, send out no Shoots hardly; the Leaves look Yellow, and seem dead, in Comparison of those on each Side of them, which being Tilled, are full of Fruit, send out a Hundred times more Wood, and their Leaves are large and flourishing; and continue to do the same annually for Ages, if the Plow or Hoe do not neglect them.

No Change of Sorts is needful in them, if the same annual Quantity of *Tillage* (which appears to provide the same annual Quantity of Food) be continued to the Vines.

But what in the *Vineyards* proves this Thesis most fully, is, That where they constantly Till the Low-Vines with the Plow, which is almost the same with the Ho-Plow, the Stems are planted about four Foot asunder, Chequer-wise; so that they plow them four Ways. When any of these Plants happen to die, new ones are immediately planted in their Room, and exactly in the Points or Angles, where the other have rotted; else, if planted out of those Angles, they would stand in the Way of the Plow. These young Vines, I say, so planted in the very Graves, as it were, of their Predecessors, Grow, Thrive, and Prosper well, the Soil being thus constantly Tilled: And if a Plumb-Tree, or any other Plant had such *Tillage*, it might as well succeed one of its own Species, as those Vines do.

'Tis observed, that White-Thorns will not prosper set in the Gaps of a White-Thorn Hedge: But I have seen the Banks of such Gaps dug, and thrown down one Summer, and made up again, and White-Thorns there re-planted the following Winter, with good Success.

But note, That the annual Plowing the Vines is more beneficial than the one Summer *Tillage* of the Banks, the Vines having it repeated to them yearly.

I have by Experience and Observation, found it to be a Rule, That *Long Tap-*

Tap-rooted Plants, as *Clover* and *St. Foin*, will not succeed immediately after those of their own or any other Species of *Long Tap-Roots*, so well as after *Horizontal-rooted* Plants; but, on the contrary, Horizontal, will succeed those *Tap-Roots* as well or better than they will succeed Horizontal.

I confess, this Observation did, for a great while, *cheat* me into the common Belief, That different Species of Plants feed on different Food; 'till I was delivered from that Error, by taking Notice, that those *Tap-Roots* would thrive exceedingly well after Turneps, which have also pretty long *Tap-Roots*, though Turneps never thrive well immediately after *Clover* or *St. Foin*; I found the true Cause of this Exception to that Rule, to be chiefly the different *Tillage* (1).

Land must be well Tilled for Turneps, which also are commonly Ho'd; they stand scarce ever above three Quarters of a Year, and are then fed on the Ground, and then the succeeding Crop of Corn has, by that means, the Benefit of twice as much *Tillage* from the Hoe as otherwise would be given to it; and the Broad *Clover* or *St. Foin*, sown with the Corn (if the Corn be not so big as to kill it) will enjoy, in its Turn, a Proportion of the extraordinary *Tillage*, and of the Dung of Cattle, which feed the Turneps, and thrive accordingly: But Broad *Clover* and *St. Foin*, being perennial Plants, stand on the Ground so long, that it lies several Years untilled; so that Turneps, sown immediately after these, do fail, for want of their due Tillage, for which there is not sufficient Time, by Plowing often enough, because, by the common Plows, it requires two or three Years to make it fine enough for Turneps, or for a Repetition of *Clover* or *St. Foin*, in strong or swerdy Land.

Another Reason why any Crop succeeds well after Turneps (and besides their being spent on the Ground where they grow) is their cold Constitution, by which they are maintained with less Food than another Plant of the same Bulk.

The *Parenchyma*, or fleshy Part of a Turnep, consisting of a watry Substance, which *cools* the *Vessels*, whereby the Sap's Motion is very slow, in Proportion to the very low Degree of Heat it has, and sends off its Recrements in the same Proportion likewise; and therefore requires the less of the terrene Nourishment to supply those Recrements.

This is seen, when a Bushel of Turneps mix'd with a Quantity of Wheaten Flour, is made into Bread, and well baked: This Bushel of Turneps gives but few Ounces Increase in Weight, more than the same Quantity of Wheaten Flour made into Bread, and baked without any Turneps. This shews there is in a Turnep very little Earth (which is the most permanent Substance of a Plant) the Oven discharges, in Vapour, near all but the largest Vessels: Its Earthy Substance being so small, is a Proof 'tis maintained by a small Quantity of Earth; and upon that Account, also of less Damage to the next Crop than another Plant would be, which required more of the solid Nourishment to constitute its firmer Body, as a Charlock does; for when a Charlock comes up, contiguous to, and, at the same time, with, a Turnep, it does so rob the Turnep, that it attains not to be of the Weight of five Ounces; when a single Turnep, having no more Scope of Ground, and, in all respects (but the Vicinity of the Charlock) equal, weighs five Pounds, yet that Charlock does not weigh one Pound.

And where three Turneps coming up, and growing thus contiguous, will weigh four Pounds; a Charlock joined with two or three Turneps, all together will be less than one Pound, upon no less Space of Ground.

(1) Very mellow rich Land is so full of Vegetable Food, that 'tis an Exception to most Rules; and therefore I speak not of That.

This Obſervation cannot be made, except where Turneps are drill'd in Rows; and there 'tis eaſy to demonſtrate, that a Charlock, during the time of its ſhort Life, draws much more Earth than a Turnep of equal Bulk, from an equal Quantity of Ground (1).

The true Cauſe why *Clover* and *St. Foin* do not ſucceed ſo well after their own reſpective Species, or that of each other, as Corn, *&c.* can, is, that they take great Part of their Nouriſhment from below the Plow's Reach, ſo as that Under-Earth cannot be tilled deep enough, but the upper Part may be tilled deep enough for the Horizontal Roots of Corn, *&c.* towards which, the Rotting of the *Clover* and *St. Foin* Roots, when cut off by the Plow, do not a little contribute. And there's no doubt but that, if the Under Earth could be as well tilled for the Tap-Roots, as the Upper Earth is for the Horizontal, the Tap-Roots would ſucceed one another as well as the Horizontal would ſucceed them, or thoſe of their own Species, or, as the Tap-Roots do the Horizontal.

The Under Earth, in ſome time, is repleniſh'd by what the Rains leave, when they ſink through it; and then Tap-rooted Plants may be there nouriſhed again, tho' the Upper Earth be drained by the Corn; ſo that no Change is ſo beneficial, as that betwixt Tap-rooted Plants, and thoſe which have only Horizontal ones. The former are provided for by Rains, tho' not ſo ſpeedily as the latter are by Tillage and Hoing.

Paſtures require no Change of Herbs; becauſe they have annually the ſame Supply of Food from the Dunging of Cattle that feed on them, and from the Benefit of the Atmoſphere.

Meadows hold out without Change of Species of Graſs, tho' a Crop be carried off every Year; the Richneſs of that Soil, with the Help of the Atmoſphere, Dung of Cattle in feeding the After-Crop, or elſe Flooding, from the overflowing of ſome River, ſome, or all of which, ſupply the Place of the Plow to a Meadow.

Woods alſo hold out beyond Memory or Tradition, without changing Sorts of Trees; and this, by the Leaves, and, perhaps, old Wood rotting on the Soil annually, which operate as a Manure, becauſe, as has been ſaid, Earth which has once paſſed any Veſſels, is ſo changed, that for a long time after, it does not regain its *Homogeneiety* (2) ſo much as to mix with pure Earth, without fermenting; and by the Deſcent of the Atmoſphere, the Trees ſhadowing the Soil, to prevent the Re-aſcent of what that brings down; all this reſembling *Tillage*, continually divides the Soil, and renews the Food equal to the Conſumption of it made by the Wood.

And the laſt Argument I ſhall attempt to bring for Confirmation of all I have advanc'd, is, that which proves both the Truth and Uſe of the reſt, *viz.* That when any Sort of *Vegetable*, by the due Degrees of Heat and Moiſture it requires, is agreeable to a Soil, it may, by the *New Horſe-Hoing Husbandry*, be continued without ever changing the Species.

(1) 'Tis certain that Turneps, when they ſtand for Seed, ſuck and impoveriſh the Ground exceedingly; for though they are of a cold Conſtitution, and conſequently conſume leſs Food than Plants of a hotter Conſtitution, and of the ſame Bulk: Yet, theſe Seed-Turneps being of ſo vaſt a Bulk, as ſometimes eighty Quarters of their Roots grow on an Acre, and their Stalks have been meaſured ſeven Foot high; and their Roots having continued at near their full Bigneſs for about ten Months together, and then carried off, they drain the Land more than a Crop of other Vegetables of leſs Bulk and a hotter Conſtitution, and which live a leſs Time; or than Wheat, which, though it lives as long, is very ſmall, except in the four laſt Months.

(2) Not that the Particles of Earth are ſtrictly *Homogeneous*, but that they are much leſs *Heterogeneous* before they are altered by Veſſels, than afterwards.

Chap.

Chap. XVII. *Of Change of* INDIVIDUALS.

SEEDS, in their natural Climate, do not degenerate, unleſs Culture has improved them; and then, upon Omiſſion of that Culture, they return to their firſt natural State.

As the Benefit of changing of *Species* of Seeds, is from Difference of *Tillage*, ſo the Benefit of changing *Individuals* of the ſame Species, appears to be from thoſe Cauſes, which are generally, themſelves, the Effects of different Climates, ſuch as Heat and Moiſture, which may alſo vary very much in the ſame Latitude and Neighbourhood; as the ſame Mountain, in the Country of the *Mogul* (related by Mr. *Evelyn*, from Monſieur *Bernier*) on the South Side produces *Indian* Plants, and on the North Side *European* Plants, from different Expoſures; and ſome Land retaining Water longer, is colder; ſome ſuffering it to paſs down quicker, and by the Nature and Figure of its Parts, cauſes ſuch a Refraction, and Reflection of the Sun's Rays, which give a great Warmth, as in Sand and gravelly Grounds, that are well ſituate, and have an *Under-Stratum* of ſome Sort of hollow Matter, next under the Staple, or *Upper-Stratum*, wherein the Plow is exerciſed.

This beneficial *Change of Individuals* ſeems rather to be from the foremention'd Cauſes, than from Change of Food; and theſe Cauſes ſhew their Efficacy, chiefly in the Generation, or Fœtation of thoſe Seeds; as Flax Seed brought from *Holland*, and ſown here, will bring as fine Flax as there; but the very next Generation of it *coarſer*, and ſo degenerating gradually, after two or three Deſcents, becomes no better than the common ordinary Sort; yet its Food is the ſame, when the Flax is fine, as when 'tis coarſe.

And ſo it is, when *Individuals* of Wheat are changed; ſo Silk Worms, hatch'd and bred in *France*, of Eggs or Seed, brought from *Italy*, will make as fine Silk as the *Italian*; but the Eggs of theſe lain in *France*, and their Iſſue, will make no better Silk than the *French*; though their Food be from Leaves of the ſame Mulberry Trees, when they make *fine* Silk and *coarſe*; therefore 'tis from the Climate, where the Eggs are impregnated, not where they have their Incubation, or Food when hatch'd, and fed to their Lives-End, that this Difference happens.

Common Barley ſown once in the burning Sand, at *Patney* in *Wiltſhire*, will, for many Years after, if ſown on indifferent warm Ground, be *ripe* two or three Weeks ſooner than any other, which has never been impregnate at *Patney*: But if ſown a Degree farther North, on cold, clayey Land, will, in two or three Years, *loſe* this Quality, and become as late ripe as any other.

Indeed, *Patney* is far from improving the Species of Barley, except we think it improved by becoming more weak and tender, and *ſhorter-lived*; which laſt mention'd Quality fits it for ſuch Countries, where the Summers are too ſhort for other Barley to ripen.

The Grains, or Seeds of *Vegetables*, are their Eggs, and the *Individual Plants*, immediately proceeding from them, have not only the Virtues they received in Embryo (or rather in *Plantulis*) but the *Diſeaſes* alſo; for when ſmutty Wheat is ſown, unleſs the Year prove very favourable, the Crop will be Smutty; which is an evident Token of *Mala Stamina*.

The ſmutty Grains will not grow, for they turn to a black Powder; but when ſome of theſe are in a Crop, then, to be ſure, many of the reſt are infected; and

and the Diſeaſe will ſhew it ſelf in the next Generation, or Deſcent of it; if the Year wherein 'tis planted, prove a wet one.

Weeds, and their Seed, in the Fields where they grow naturally, for Time immemorial, come to as great Perfection as ever, without Change of Soil.

Theſe Weeds, with Acorns, and other Maſts, Crabs, Sloes, Hips, and Haws, are thought to have been, originally, the only natural Product of our Climate; therefore, other Plants being Exoticks, many of them, as to their *Individuals*, require Culture, and Change of Soil, without which they are liable, more or leſs, to degenerate.

But to ſay, that the Soil can cauſe Wheat to degenerate into Rye, or convert Rye into Wheat, is what reflects upon the Credit of *Laurembergius*: 'Tis as eaſy to believe, that a Horſe, by feeding in a certain Paſture, will degenerate into a Bull, and in other Paſture revert to a Horſe again; theſe are ſcarce of more different Species than Wheat and Rye are: If the different Soil of *Wittemberg*, and *Thuringia*, change one Species, they may the other.

Chap. XVIII. *Of RIDGES.*

THE Method of plowing Land up into *Ridges*, is a particular Sort of *Tillage*; the chief Uſe of which is the Alteration it makes in the Degrees of Heat and Moiſture, being two of the grand Requiſites of *Vegetation*; for very different Degrees of theſe are neceſſary to different Species of *Vegetables*.

Thoſe *Vegetables* commonly ſown in our Fields, require a middle Degree of both, not being able to live on the Sides of perpendicular Walls in hot Countries, nor under Water in cold ones, neither are they amphibious, but muſt have a Surface of Earth not cover'd, nor much ſoak'd with Water, which deprives them of their neceſſary Degree of Heat, and cauſes them to languiſh. The Symptoms of their Diſeaſe are a pale or yellow Colour in their Leaves, and a Ceſſation of Growth, and Death enſues as ſure as from a Dropſy.

The only Remedy to prevent this Diſeaſe in Plants, is to lay ſuch wet Land up into *Ridges*, that the Water may run off into the Furrows, and be convey'd by Ditches or Drains into ſome River.

The more a Soil is fill'd with Water, the leſs Heat it will have.

The two Sorts of Land moſt liable to be over-glutted with Water, are Hills, whereof the *Upper Stratum* (or Staple) is Mould lying upon a *Second Stratum* of Clay.

And generally all ſtrong deep Land.

Hills are made wet and ſpewy by the Rain-Water which falls thereon, and ſoaks into them as into other Land; but being ſtopp'd by the Clay lying next the Surface or Staple, cannot enter the Clay; and for want of Entrance, ſpreads it ſelf upon it; and as Water naturally tends downwards, it is by the incumbent Mould partly ſtopp'd in its Deſcent, from the upper, towards the lower Side of an Hill; and being follow'd and preſs'd on by more Water from above, is forced to riſe up into the Mould lying upon it, which it fills as a Ciſtern does a Fountain (or *Jette d'Eau*). The Land of ſuch a Hill is not the leſs wet or ſpewy for being laid up in *Ridges*, if they be made from the higher to the lower Part of the Field; for the Force of the Water's Weight continued, will raiſe it ſo, as to cauſe it to iſſue out at the very Tops of thoſe *Ridges*: the Earth becomes a ſort of Pap or Batter, and being like a Quagmire, in going over

over it, the Feet of Men and Cattle ſink in 'till they come to the Clay; the upper Mould is near the Condition of the *Chaos Inſtabilis Terra*.

There are two Methods of Draining ſuch a wet Hill: The one is to dig many Trenches croſs the Hill horizontally, and either fill them up with Stones looſe or Arch-wiſe, through which the Water, when it ſoaks into the Trenches, may run off at one or both Ends of them into ſome Ditch which is lower, and carries it away: Then they cover the Trenches with Mould, and plow over them as in dry level Ground.

This Method has been found effectual for a Time, but not of long Continuance; for the Trenches are apt to be ſtopp'd up, and then the Springs break out again as before: Beſides, this is a very chargeable Work, and in many Places, the Expence of it may almoſt equal the Purchaſe of the Land.

Therefore, 'tis a better Method to plow the *Ridges* croſs the Hill, almoſt horizontally, that their parting Furrows lying open, may each ſerve as a Drain to the *Ridge* next below it; for when the Plow has made the Bottom of theſe horizontal Furrows a few Inches deeper than the Surface of the Clay, the Water will run to their Ends, very ſecurely, without riſing into the Mould, provided no Part of the Furrows be lower than their Ends.

Theſe parting Furrows, and their *Ridges*, muſt be made more or leſs oblique, according to the Form and Declivity of the Hill; but the more Horizontal they are, the ſooner the Rain-Water will run off the Lands; for in that Caſe it will run to the Furrows, and reach them at right Angles, which ~~they~~ will not do when the *Ridges* (or Lands) are oblique; and therefore the Water's Courſe croſs the Lands will be longer. Every one of theſe horizontal Trenches receives all the Water from the Rills or little Gutters wherein the Water runs betwixt the Mould and the Clay; theſe are all cut off by the Trenches, which receive the Water at their upper Sides, and carry it away, as the Trunks of Lead plac'd under the Eaves of a Houſe do carry away the Rain-Water.

If there were no other Manner of plowing *Ridges* on the Sides of Hills than what is commonly practiſed on the Plains, this Method of leaving open Furrows (or Drains on Declivities) would be impracticable; becauſe the Plow could not turn up the Furrows againſt the Hill and againſt the *Ridge* alſo, from the lower Side of it: But the eaſy Remedy againſt that Inconvenience, is to plow ſuch *Ridges* in Pairs, without throwing any Earth into the Trenches, and then the *Ridges* will be plain a-top, and the Rain-Water will run ſpeedily downward to the next Trench, and thence to the Head-land, and ſo out of the Field. Theſe Trenches will be made, as well as kept, always open by this Plowing in Pairs, and is abundantly more eaſy than the Way of plowing *Ridges* ſingly. This plowing in Pairs prevents alſo another Inconveniency which would otherwiſe happen to theſe horizontal *Ridges*; and that is, they being higheſt in the Middle, the Rain-Water could not run freely from the upper Half of a *Ridge* towards the next Furrow below it, but would be apt to ſink in there, and ſoak thro' the *Ridge*; but when *Ridges* lie in Pairs, the Water will run off from a whole *Ridge*, as well as off the lower Half of a *Ridge* that is plow'd ſingly, and higheſt in the Middle.

Note, That every Time of Plowing, the Pairs muſt be changed, ſo that the Furrow, which had two (Lands or) *Ridges* turned towards it one time, muſt have two turned from it the next time: This Method keeps the Surfaces of all the *Ridges* (or Lands) pretty near even (1).

(1) *Note*, This cannot be done on a Hill, whoſe Declivity is ſo great, that the Plow is not able to turn a Furrow againſt it. But in this Caſe, perhaps, it may be ſufficient to plow the *Ridges* obliquely, enough for the Furrow to be turned both Ways.

Farmers are at more Trouble and Pains to drown ſuch Land (it being common to break their Horſes Wind in Plowing up Hill) than they would be at, if they laid their *Ridges* in the aboveſaid Manner, which would effectually make them dry. Many hundred Acres of good Ground are ſpoiled; and many a good Horſe, in Plowing againſt the Hill, and againſt all Reaſon, Demonſtration, and Experience too, which might be learned even from the *Iriſh*, who drain their Bogs and make them fruitful, whilſt ſome *Engliſh* beſtow much Labour to drown and make barren many of their Hills, which would more eaſily be made dry and fertile.

I have obſerved, that thoſe Places of ſuch a Hill, that when Plowed with the Deſcent, were the wetteſt, and never produced any thing that was ſown on them, became the very richeſt, when made dry by Plowing croſs the Deſcent. This ſhews that Water does not impoveriſh Land, but the contrary; though, whilſt it ſtands thereon, it prevents the Heat which is neceſſary to the Production of moſt Sorts of *Vegetables*: And where it runs ſwiftly, it carries much Earth away with it; where it runs ſlowly, it depoſites, and leaves much behind it.

Though, in all Places where this Way of making the *Ridges* croſs the Deſcent of Hills is practiſed, the Land becomes dry, yet very few Farmers will alter their old Method; no, not even to try the Experiment; but ſtill complain their Ground is ſo wet and ſpewy, that it brings them little or no Profit; and if the Year prove moiſt, they are great Loſers by ſowing it (1).

The Benefit of laying up ſtrong deep Land into *Ridges*, is very great; though there be no Springs in it, as are in the Hills aforementioned.

This Land, when it lies flat, and is Plowed in the *Virgilian* Manner, ſometimes one Way, ſometimes the other, by croſs Plowing, retains the Rain-Water a long time ſoaking into it; by that Misfortune, the Plow is kept out two or three Weeks longer than if the ſame were in round *Ridges*; nay, ſometimes its Flatneſs keeps it from drying till the Seaſon of Plowing, and even of Sowing too, be loſt.

The Reaſons commonly given againſt ſuch *Ridges*, are thoſe following.

I. *They prevent the fancied Benefit of Croſs-Plowing.*

II. *Farmers think they loſe Part of their Ground, by leaving more Furrows betwixt* Ridges, *than when they lay their Land flat, where the Lands are made much larger than round* Ridges *can conveniently be: And becauſe, alſo, the Furrows betwixt* Ridges *muſt be broader, and lie open; but the other they fill up by the Harrows.*

The firſt of theſe I have already anſwered elſewhere, by ſhewing, that Croſs-Plowing is oftner injurious than beneficial.

The *Second*, I ſhall ſufficiently confute, if I can make appear that no Ground is loſt, but much may be gained by *Ridges*.

What I mean by gaining of Ground, is the Increaſing of the Earth's Surface; for if a flat Piece be plow'd up into *Ridges*, and if in each ſixteen Foot Breadth, there be an empty Furrow of two Foot; and yet by the Heighth and Roundneſs of the *Ridges*, they have eighteen Foot of Surface, capable of producing Corn equally to eighteen Feet, whilſt the Piece was flat, there will be one eighth Part of profitable Ground, or Surface, gain'd more than it had

(1) Remember, in making *Ridges* of all Sorts, and of whatſoever Figure the Piece is, that no *Ridge* ought to have any more Furrows at one End, than at the other End; for if there be, the Plow muſt be turned in the Middle of the Piece, which will cauſe the Land to be trodden by the Horſes; but if each End have an equal Number of Furrows, the Horſes, in turning, will tread only upon the Head-Lands, which may be plowed afterwards; or if deſign'd to be Horſe-ho'd, the Head-Lands ſhould be narrow, and not plowed at all.

when

when level; and this, I believe, Experience will prove, if the Thing were well examined into.

But againſt this Increaſe of profitable Ground, there is an Objection, which I muſt not call a frivolous one, in reſpect to the Authors who bring it; yet, I hope, the Deſire of finding the Truth, will juſtify me to examine it, and the Arguments brought to ſuſtain it.

This Opinion of theirs, is founded upon their Notion (which, I think, very erroneous) of the Perpendicular Growth of *Vegetables*, and is, by Mr. *Bradley*, ſet in its beſt Light, in his *Vol.* I. *Page* 8. *uſque ad Page* 13. and in his Cuts, repreſenting three Hills; but his Arguments ſeem to be ſuch, as all Arguments are, which pretend to prove a Thing to be what it is not, *viz.* Sophiſtical ones.

The Hypotheſis he endeavours to prove, is in *Page* 8. thus: 'A Hill may 'contain four equal Sides, which meet in a Point at the Top; but the Con-'tents of theſe four Sides, can produce no more, either of Grain or Trees, than 'the plain Ground, upon which the Hill ſtands, or has its Baſe; and yet, by 'the Meaſure of the Sides, we find twice the Number of Acres, Roods, and 'Poles, which meaſures in the Baſe, or Ground Plat; and therefore, *Page* 9. 'Hills are worth no more than half their Superficial Meaſure; *i. e.* two Acres 'upon the Side of the Hill to pay as much as one upon the Plain, provided 'the Soil of both is equally rich.'

To prove it, he gives an Example in *Fig.* III. of Buildings upon a Hill; ſhewing, that the two Sides of the Hill will only bear the ſame Number of Houſes, that may ſtand in the Line at the Baſe.

This is foreign to the Queſtion, of how much Grain, or how many Trees, the Hill will produce. For *Vegetables* being fed by the Earth, require much more of its Surface to nouriſh them, than is neceſſary for them to ſtand on; but Buildings require no more of the Surface but Room to ſtand on: Therefore, no ſuch Argument, taken from Buildings, can be applied to *Vegetables*.

This Argument of Mr. *Bradley*'s, gives no more Satisfaction to the Queſtion, about producing of *Vegetables*, than a Grazier would do, being asked, how many Oxen a certain Paſture Ground would maintain, if he ſhould anſwer, by ſatisfying you with the Number of Churches which might ſtand thereon.

The like Anſwer, in Effect, may be given to the Argument in *Fig.* IV. of the Pales, only he has forgot to ſhew, that to mound over the Hill would require double the Rails, or double the Hedge-wood (except Stakes) as to mound the Baſe; if it did not, the Hill would be yet of the more Value, becauſe thereon more Surface might be fenced in at leſs Expence.

In his *Fig.* II. he gives no good Reaſon why the Hill ſhould not bear twice the Number of Trees as the Baſe can do; for there is as much Room for two hundred Trees on the Hill, as for one Hundred on the Baſe, becauſe he allows the Surface to be double to that of the Baſe. He ought to meaſure the Diſtances of the Trees on the Hill, by a Line parallel to the Surface they grow on, as well as he does the Diſtances of thoſe below.

And ſuppoſe the Row at the Baſe, together with the Surface they grow on, were rais'd up, ſo that it ſhould become parallel to Half the Row on the Hill, Would not the Trees in the Baſe Row be twice as near to one another as the Trees in the Hill Row are? And ſuppoſe a Line had been ty'd from the Tops of all the lower Trees before the Row was ſo rais'd up at one End, and then after the Situation of the Row was ſo alter'd, if by this Line the Trees ſhould be pull'd from being perpendicular to the Surface they grow on, and made to ſtand oblique to that, and perpendicular to the Horizon, as the upper Trees are, Would the Diſtances of the Trees from one another be alter'd by this

 Change

Change of Posture? No, for their Bottoms would be at the same Distances, because not removed; and their Tops, because the same Line holds them, at the same Distances in both Postures.

Mr. *Bradley*'s Lines, drawn from the Trees below, which are one Perch asunder, makes the two Rows of Trees, falsely, seem to be at equal Distances, because these Lines are parallel to each other: But this is a Deceit; for, in Truth, the Distances of the Trees are not measured by the Distances of those Lines, but by the extream Points at the Ends of the Lines; (1) and those two Points above, where the Lines cut the Row obliquely, and at unequal Angles, are twice as far asunder as the endmost or extream Points below are, where the Lines cut the Row at right Angles. Hence may be inferr'd, that there is Room for twice as many Trees to grow on the Hill as on the Base, and twice as much Grain for the same Reason, and because there is twice the Surface for the Roots to spread in. And since Mr. *Bradley* allows the Hill to contain two Perches to one of the Base, and the Soil of both to be of equal Goodness, and yet, affirms, that the two can produce no more of Grain or Trees, than the one Perch can; I cannot see, why it should not be as reasonable to say, That two Quarters of Oats will maintain a Horse no longer, nor better, than one Quarter of Oats, of equal Goodness, will do.

In *Page* 13. He concludes thus: 'That Hills, in their Measure, contain 'only as much profitable Land as the Plain or Plat of Ground they stand upon; 'and as a Proof of that, all *Vegetables* or *Plants* have an erect Method of 'Growth.

This Proof of Mr. *Bradley*'s is founded upon an Argument which has no Consequence, unless it were first proved, that the Surface of Earth could produce and maintain as many *Vegetables* or *Plants* as could stand thereon in an erect Posture; which Supposition is as impossible, as that half an Acre should produce and maintain a Hecatomb, without Mr. *Bradley*'s teaching Oxen to live upon Air for their Food, as he thinks *Van Helmont*'s Tree did.

All expert Husbandmen must needs be convinced, that the greatest Crop of *Vegetables* that ever grew, might stand in an erect Posture, upon a twentieth (and I may say the hundredth) Part of the Surface that produced it; therefore, there must be nineteen Parts (for the Roots to spread) unoccupied by the Trunks, Stems, or Stalks.

And tho' it be true, that a Hill will support no more of these (than its Base) when placed in an erect Posture close together, as in a Sheaf; yet this close Position is only proper for them when they are dead, and require no more Nourishment than Houses and Pales do; and consequently require no Room but to stand on. Therefore, this Argument of Mr. *Bradley*'s must not be admitted in Vegetative Growth, where there is always required nineteen times more Room in the Surface, for the Use of the Roots, than what the Stems, Trunks, or Stalks, do possess upon it: And the more Room there is for the Roots, the greater Number of Plants may be produced.

Neither can I admit, that all *Vegetables* or *Plants* have an erect Method of Growth; because the contrary is seen in Chamomile, and divers other *Vegetables*, which have an Horizontal Method of Growth.

But what is more material to this Purpose, to be observed, is, that all *Vegetables* have Horizontal Roots, and Roots parallel to the Earth's Surface or Superficies; and unless those Roots have a sufficient Superficies of Earth to range in, for Nourishment of a Plant, the Stem and Branches cannot prosper, whatever be their Method of Growth above the Earth; and if there be not a due Quantity of Food for the Roots, within the Earth, a very little Space may contain the external Parts of *Vegetables* upon it.

(1) These upper Trees are measured by the unequal Length of the Lines, not by their parallel Distance, as the lower Trees are; therefore his Measure is a Quibble.

From what has been said, I think, we may conclude, that Mr. *Bradley*'s Hill may produce more *Vegetables* than the Base whereon it stands; and therefore, it is of more Value than half its superficial measure, *i. e.* Two Acres on the Hill is worth more than one Acre on the Plain, the Soil being equally rich, as he allows it to be, in his Case.

Now, indeed, whether Mr. *Bradley* might not possibly be deceived in his Opinion, of the equal Richness of his Hill and his Plain, I will not dispute; I will only say this, that 'tis generally otherwise. But where a Plain is plow'd up into moderate *Ridges*, their Heighth being in Proportion to the Depth of the Staple, below which the Plow must take nothing into the *Ridges*, the Soil is equally rich, whether it be plowed plain or ridged up. And as the Surface is in the *Ridges* increased, there is nothing, in all Mr. *Bradley*'s Arguments, that shews, why that increased Surface should not produce more *Vegetables* than the same Earth could do whilst it was level.

There are other Reasons why it should produce more when Ridged, besides the Increase of Surface; as,

I. *'Tis then more free from the Injuries of too much Water.*

II. *'Tis better protected against cold Winds; because the* Ridges *are a Shelter to one another.*

III. *If the Surface be much exhausted, by too frequent Sowing, the* Ridges *may be made just where the Furrows were, and then the Surface will be intirely changed.*

The following general Rules ought to be observed about *Ridges*, viz.

That as to their Heighth, Regard must be had to the Nature of the Soil, in its difficult Admission of Water; for the greater that is, the greater Declivities the *Ridges* should have; and then, if the Soil be not deep, they should generally be made the narrower.

There is one Thing which Mr. *Bradley* takes no Notice of, *viz.* That no more of the Rain, or other Benefits of the Atmosphere, which descend perpendicularly, can fall on a Hill, or on a Ridge, than what would fall on the Base, or Ground Plot. But, 'tis probable, that more of the fine Vapour, which swims in the Current of the Air horizontally, does strike and break against those Eminences, and so make an Equivalent; (1) except that it runs off more quickly.

Notwithstanding all I have here said, in behalf of *Ridges*, I must confess, that for my *Hoing-Husbandry*, I should prefer Land that is naturally dry enough, without a Necessity of being laid up in any larger or higher *Ridges* than what may contain six Feet in Breadth, that Size being the largest that is proper for the regular Operation of the *Horse-Hoe*; whether the Rows be double, treble, or quadruple.

(1) But though *Ridges* do alter or increase the Surface, the Quantity of Soil or Earth remaining the same as on the Level, and of no greater Depth than can be Tilled, it may produce equal Crops of Corn with the Level, and no more; except from the Advantage the *Ridges* may give it in lying drier.

CHAP. XIX.

Of Differences *between the* Old *and the* New Husbandry.

IN order to make a Comparison between the *Hoing Husbandry*, and the *Old Way*, there are four Things; whereof the Differences ought to be very well considered.

I. *The Expence* }
II. *The Goodness* } of a Crop.
III. *The Certainty* }
IV. *The Condition in which the Land is left after a Crop.*

The Profit or Loss arising from Land, is not to be computed, only, from the Value of the Crop it produces; but from its Value, after all Expences of Seed, Tillage, *&c.* are deducted.

Thus when an Acre brings a Crop worth *four Pounds*, and the Expences thereof amount to *five Pounds*, the Owner's Loss is *one Pound*; and when an Acre brings a Crop which yields *thirty Shillings*, and the Expence amounts to no more than *ten Shillings*, the Owner receives *one Pound* clear Profit from this Acre's very small Crop, as the other loses *one Pound* by his greater Crop.

The usual Expences of an Acre of Wheat, sown in the Old Husbandry, *in the Country where I live, is, in some Places, for two Bushels and a half of Seed; in other Places four Bushels and a half, the least of these Quantities at* three Shillings per *Bushel, being the present Price, is* seven Shillings *and* Six-pence. *For three Plowings, Harrowing, and Sowing,* sixteen Shillings; *but if plow'd four times, which is better,* one Pound. *For thirty Load of Dung, to a Statute Acre, is* two Pounds five Shillings. *For Carriage of the Dung, according to the Distance, from* two Shillings *to* Six-pence *the Load;* one Shilling *being the Price most common, is* one Pound ten Shillings. *The Price for Weeding is very uncertain, it has sometimes cost* twelve Shillings, *sometimes* two Shillings per *Acre.*

	l.	*s.*	*d.*
In Seed and Tillage, nothing can be abated of — — —	01	03	06
For the Weeding, one Year with another, is more than — —	00	02	00
For the Rent of the Year's Fallow — — — — —	00	10	00
For the Dung; 'tis in some Places a little cheaper, neither do they always lay on quite so much; therefore abating 15 s. in that Article, we may well set Dung and Carriage at — —	02	10	00
Reaping commonly 5 s. sometimes less — — — — —	00	04	06
Total	04	10	00

Folding *of Land with Sheep is reckoned abundantly cheaper than Cart-Dung; but this is to be questioned, because much Land must lie still for keeping a Flock (unless there be Downs) and for their whole Year's Keeping, with both Grass and Hay, there are but three Months of the twelve wherein the Fold is of any considerable Value; this makes the Price of their Manure quadruple to what it would be, if equally good all the Year, like Cart-Dung: And Folding Sheep yield little Profit, besides their Dung; because the Wool of a Flock, except it be a large one, will scarce pay the Shepherd and the Shearers. But there is another Thing yet, which more inhances the Price of Sheep Dung, and that is the dunging the Land with their Bodies, when they all die of the Rot, which happens too frequently in many Places; and then the whole Crop of Corn must go to purchase another Flock, which may have the same Fate the ensuing Year, if the Summer prove wet: And so may the Farmer be served for several more successive Years, unless he should break, and another take his Place, or that dry Summers come in Time to prevent it. To avoid this Misfortune he would be glad to purchase Cart-Dung at the highest Price, for supplying the Place of his Fold; but 'tis only near Cities, and great Towns, that a sufficient Quantity can be procured.*

But, *supposing the Price of Dunging to be only two Pounds ten Shillings, and the general Expence of an Acre of Wheat, when sown, at three Shillings per Bushel, to be four Pounds ten Shillings, with the Year's Rent of the Fallow.*

The Expences of Planting an Acre of Wheat in the *Hoing Husbandry*, is three Pecks (1) of Seed, at *three Shillings per* Bushel, is *two Shillings* and *Three-pence.* The whole Tillage, if done by Horses, would be *eight Shillings*; because our two Plowing and six Hoings, (2) are equal to two Stirrings, the common Price whereof is *four Shillings* each; but this we diminish half, when done by Oxen kept on *St. Foin*, in this manner, *viz.* Land, worth *thirty Shillings* Rent, drill'd with *St. Foin*, will well maintain an Ox a Year, (3) and sometimes Hay will be left to pay for the Making; we cannot therefore allow more than *one Shilling* a Week for his Work, because his Keeping comes but to *Seven-pence* a Week round the Year.

In plain Plowing, six Foot contains eight Furrows; but we plow a Six-Foot Ridge at four Furrows, because in this there are two Furrows cover'd in the Middle of it, and one on each Side of it lies open. Now, what we call one Hoing, is only two Furrows of this Ridge, which is equal to a fourth Part of one plain Plowing; so that the Hoing of four Acres requires an equal Number of Furrows with one Acre, that is Plow'd plain, and equal time to do it in (except that the Land that is kept in Hoing, works much easier than that which is not).

All the *Tillage* we ever bestow upon a Crop of Wheat that follows a Ho'd Crop, is equal to eight Hoings, two of which may require four Oxen each, one of them three Oxen, and the other five Hoings two Oxen each. However allow three Oxen to each single Hoing, taking them all one with another, which is three Oxen more than it comes to in the whole.

Begin at five in the Morning; and in about six Hours you may Hoe three Acres, being equal in Furrows to three Rood, *i. e.* three Quarters of an Acre. Then turn the Oxen to Grass, and after resting, eating, and drinking two Hours and a half, with another Set of Oxen begin Hoing again; and by, or before half an Hour after Seven at Night, another like Quantity may be Ho'd. These are the Hours the Statute has appointed all Labourers to work, during the Summer Half-year.

To Hoe these six Acres a Day, each Set of Oxen draw the Plow only eight Miles and a Quarter, which they may very well do in five Hours; and then the Holder and Driver will be at their Work of Plowing ten Hours, and will have four Hours and a half to rest, *&c.*

The Expence then of Hoing six Acres in a Day, in this manner, may be accounted; at *one Shilling* the Man that holds the Plow, *Six-pence* the Boy that drives the Plow, *one Shilling* for the six Oxen, and *Six-pence* for keeping the

(1) Sometimes half a Bushel is the most just Quantity of Seed to drill on an Acre.
(2) But we sometimes Plow our Six-Foot Ridges before Drilling, at five or six Furrows, which is a Furrow or two more than I have reckoned: But we do not always Hoe six times afterwards.
(3) Or an Ox may be well kept nine Months, with an Acre of indifferent *Horse-Ho'd* Turneps; and if we value them only at the Expence and Rent of the Land, this will be a yet cheaper Way of maintaining Oxen.

Tackle in Repair. The whole Sum for Hoing these six Acres is *three Shillings*, being *Six-pence per* Acre (1) (2).

They who follow the *Old Husbandry* cannot keep Oxen so cheap, because they can do nothing without the Fold, and Store-Sheep will spoil the *St. Foin*. They may almost as well keep Foxes and Geese together, as Store-Sheep and good *St. Foin*. Besides, the sowed *St. Foin* cost ten times as much the Planting as drill'd *St. Foin* does, and must be frequently manured, or else it will soon decay; especially upon all Sorts of chalky Land, whereon 'tis most commonly sown.

The Expence of Drilling cannot be much, for as we can Hoe six Acres a Day, at two Furrows on each Six-Foot Ridge, so may we drill twenty-four Acres a Day, with a Drill that plants two of those Ridges at once; and this we may reckon a *Penny Half-penny* an Acre. But because we find it less trouble to drill single Ridges, we will set the Drilling, at most, *Six-pence per* Acre.

As every successive Crop (if well managed) is more free from Weeds than the preceding Crop; I will set it all together at *Six-pence* (3) an Acre for Weeding.

For a Boy or a Woman to follow the *Ho-Plow*, to uncover the young Wheat, when any Clods or Earth happen to fall on it, for which Trouble there is seldom necessary above once (4) to a Crop, *Two-pence* an Acre. *One Penny* is too much for Brine and Lime for an Acre.

Reaping this Wheat is not worth above half as much as the Reaping of a sown Crop of equal Value; because the Drill'd standing upon about a sixth Part of the Ground, a Reaper may cut almost as much of the Row at one Stroke, as he could at six, if the same stood dispersed all over the Ground, as the Sowed does. And because he who reaps sowed Wheat, must reap the Weeds along with the Wheat; but the Drilled has no Weeds; and besides, there goes a greater Quantity of Straw, and more Sheaves, to a Bushel of the sowed, than of the drilled. And since some hundred Acres of drilled Wheat has been reaped at *two Shillings* and *Six-pence per* Acre, I will count that to be the Price.

The whole Expence *of an Acre of Drilled Wheat.*	*l.*	*s.*	*d.*
For Seed	00	02	03
For Tillage	00	04	00
For Drilling	00	00	06
For Weeding	00	00	06
For Uncovering	00	00	02
For Brine and Lime	00	00	01
For Reaping	00	02	06
Total	00	10	00
The Expence of an Acre of Sowed Wheat is	04	00	00
To which must be added, for the Year's Rent of the Fallow	00	10	00
Total	04	10	00

If I have reckon'd the Expence of the Drilled at the lowest Price, to bring it to an even Sum, I have also abated in the other more than the whole Expence of the Drilled amounts unto.

(1) But where there is not the Convenience of keeping Oxen, the Hiring Price of Hoing with Horses is one Shilling each Time.

(2) When a Roller is used, which is less than a Hoing, because one Person to lead is enough, and that may be a Boy; and once in an Interval may suffice, and then 'tis less Labour than half a Hoing; and for this we may well abate one Hoing of the eight.

(3) This is when the Land has been well cleansed of Weeds in the preceding Crop, or Fallow, or both.

(4) But this Expence being so small, 'tis better that a Person should follow at every Hoing where we suspect that any Damage may happen from any Earth's falling on, or pressing too hard against some of the Plants.

And thus the Expence of a drilled Crop of Wheat is but the ninth Part of the Expence of a Crop sown in the common Manner.

'Tis also some Advantage, that less Stock is required where no Store-Sheep are used.

II. *Of the different Goodness of a Crop.*

The Goodness of a Crop consists in the Quality of it, as well as the Quantity; and Wheat being the most useful Grain, a Crop of this is better than a Crop of any other Corn, and the Ho'd Wheat has larger Ears (and a fuller Body) than sow'd Wheat. We can have more of it, because the same Land will produce it every Year, and even Land which, by the *Old Husbandry*, would not be made to bear Wheat at all: So that in many Places, the *New Husbandry* can raise Ten Acres of Wheat for One that the *Old* can do; because where Land is poor, they sow but a Tenth Part of it with Wheat.

We do not pretend, that we have always greater Crops, or so great as some sown Crops are, especially if those mention'd by Mr. *Houghton*, be not mistaken.

The greatest Produce I ever had from a single Yard in Length of a double Row, was Eighteen Ounces; the Partition of this being Six Inches, and the Interval Thirty Inches, was, by Computation, Ten Quarters (or Eighty Bushels) to an Acre.

I had also Twenty Ounces to a like Yard of a Third successive Crop of Wheat; but this being a treble Row, and the Partitions and Interval being wider, and supposed to be in all Six Foot, was computed to Six Quarters to an Acre. And if these Rows had been better order'd than they were, and the Earth richer and more pulveriz'd, more Stalks would have Tillered out, and more Ears would have attain'd their full Size, and have equal'd the best, which must have made a much greater Crop than either of these were.

But to compare the different Profit, we may proceed thus: The Rent and Expence of a drill'd Acre being *one Pound*, and of a sow'd Acre *five Pounds*; One Quarter of Corn produced by the Drill'd, bears an equal Proportion in Profit to the *one Pound*, as Five Quarters produced by the other do to the *five Pounds*. As suppose it be of Wheat, at *two Shillings* and *Six-pence* a Bushel, there is neither Gain nor Loss in the one nor the other Acre, though the former yield but One Quarter, and the other, Five; but if the drill'd Acre yield Two Quarters, and the sow'd Acre Four Quarters at the same Price, the drill'd brings the Farmer *one Pound* clear Profit, and the sown, by its Four Quarters, brings the other *one Pound* Loss. Likewise, Suppose the Drilling Farmer to have his *five Pounds* laid out on Five Acres of Wheat, and the other to have his *five Pounds* laid out on One dung'd Acre, then let the Wheat they produce be at what Price it will, if the Five Acres have an equal Crop to the One Acre, the Gain or Loss must be equal. But when Wheat is *Cheap*, as we say it is, when Sold at *Two and Six-pence* a Bushel, then if the *Virgilian* has Five Quarters on his Acre, he must sell it all to pay his Rent and Expence; but the other having Five Quarters on each of his Five Acres, the Crop of One of them will pay the Rent and Expence of all his Five Acres, (1) and he may keep the remaining Twenty Quarters, 'till he can sell them at *five Shillings* a Bushel, which amounts to *forty Pounds*, wherewith he may be able to buy four of his five Acres at

(1) Or suppose a drill'd Acre to produce no more than one Third of the sow'd Acre's Crop, whose Expence is five times as much as of the drill'd, 'tis much more profitable, because a Third of Five Pounds, is One Pound Thirteen and Four-pence; and a Fifth of the Rent and Expence being only One Pound, such drill'd Acre pays the Owner Thirteen and Four-pence more Profit than the other which brings a Crop treble to the drill'd.

twenty

twenty Years Purchase, out of one Year's Crop, whilst the *Virgilian* Farmer must be content to have only his Labour for his Travel; or if he pretends to keep his Wheat till he sells it at *five Shillings* a Bushel, he commonly runs in Debt to his Neighbours, and in Arrear of his Rent; and if the Markets do not rise in time, or if his Crops fail in the Interim, his Landlord seizes on his Stock, and then he knows not how it may be sold, Actions are brought against him, the Bailiffs and Attornies pull him to Pieces; and then the *Virgilian* Farmer is broke (1).

III. *The Certainty of a Crop.*

The Certainty of a Crop is much to be regarded, it being better to be secure of a moderate Crop, than to have but a mere hazard of a great one. The *Virgilian* is often deceiv'd in his Expectation, when his Crop at coming into Ear, is very big, as well as when 'tis in Danger of being too little. Our Hoing Farmer is much less liable to the Hazard of either of those Extreams; for when his Wheat is big, 'tis not apt to lodge or fall down, which Accident is usually the utter Ruin of the other, he is free from the Causes which make the *Virgilian* Crop too little.

A very effectual Means to prevent the failing of a Crop of Wheat, is to plow the pulveriz'd Earth for Seed early, and when 'tis dry. The early Season also is more likely to be dry than the latter Season is.

1. *The Virgilian is commonly late in his Sowing; because he can't Fallow his*
Ground early, for fear of killing the Couch, and other Grass that maintains his
2. *folding Sheep, which are so necessary to his Husbandry: And when 'tis sow'd*
3. *late, it must not be sow'd dry, for then the Winter might kill the young Wheat.*
Neither can he at that time plough dry, and sow wet, because he commonly sows
under Furrow; that is, sows the Seed first, and Plows it in as fast as 'tis sown.
4. *If he sows early (as he may if he will) in light Land, he must not sow dry, for*
fear the Poppies and other Weeds should grow and devour his Crop; and if his
5. *Land be strong, let it be sown early, wet or dry (tho' wet is worst) 'tis apt to*
grow so stale and hard by the Spring, that his Crop is in danger of Starving,
unless the Land be very rich, or much dung'd, and then the Winter and Spring
proving kind, it may not be in less danger of being so big as to fall down and be
6. *spoil'd. Another thing is, that though he had no other Impediment against*
Plowing dry, and Sowing wet, 'tis seldom that he has time to do it in; for he
7. *must Plow all his Ground, which is eight Furrows in six Foot, and whilst it is*
wet, must lie still with his Plow. *When he sows under Furrow, he fears to*
8. *Plow deep, lest he bury too much of his Seed, and if he Plows shallow, his Crop*
loses the Benefit of deep Plowing, which is very great. When he sows upon
9. Furrow *(that is after 'tis Plow'd) he must harrow the Ground level to cover*
the Seed, and that exposes the Wheat the more to the cold Winds, and suffers the
Snow to be blown off it, and the Water to lie longer on it; all which are great
Injuries to it.

Our *Hoing Husbandry* is different in all of the foremention'd Particulars.

1. We can plow the two Furrows whereon the next Crop is to stand, immediately after the present Crop is off.

2. We have no use of the Fold; because our Ground has annually a Crop growing on it, and it must lie still a Year, if we would fold it, and that Crop would be lost; and all the Good the Fold could do to the Land, would be only to help to pulverize it for one single Crop; its Benefit not lasting to the second Year. And so we should be certain of losing one Crop for the very uncertain

(1) Tho' only five Acres and one Acre be put, yet we may imagine them Two hundred and fifty, and Fifty to enrich the one, or break the other Farmer.

Hopes

Hopes of procuring one the ensuing Year by the Fold; when 'tis manifest by the adjoining Crops, that we can have a much better Crop every Year, without a Fold or any other Manure.

3. We can plow dry, and drill wet, without any manner of Inconvenience.

4. *He fears the Weeds will grow and destroy his Crop:* We hope they will grow, to the end we may destroy them.

5. We do not fear to plant our Wheat early, (so that we plow dry) because we can help the Hardness or Staleness of the Land by Hoing.

6. The two Furrows of every Ridge whereon the Rows are to be drill'd, we plow dry; and if the Weather prove wet before these are all finish'd, we can plow the other two Furrows up to them, until it be dry enough to return to our Plowing the first two Furrows, and after finishing them, let the Weather be wet or dry, we can plow the last two Furrows. We can plow our two Furrows in the fourth part of the Time they can plow their eight, which they must plow dry all of them, in every six Foot; for they can't plow part dry, and the rest when 'tis wet, as we can.

7. We never plant our Seed under Furrow, but place it just at the Depth, which we judge most proper, and that is pretty shallow, about two Inches deep, and then there is no danger of burying it.

8. We not only plow a deep Furrow, but also plow to the Depth of two Furrows; that is, we Trench-plow where the Land will allow it; and we have the greatest Convenience imaginable for doing this, because there are two of our four Furrows always lying open; and two plow'd Furrows (that is one plow'd under another) are as much more advantageous for the nourishing a Crop, as two Bushels of Oats are better than one for nourishing a Horse. Or if the Staple of the Land be too thin or shallow, we can help it by raising the Ridges prepar'd for the Rows the higher above the Level.

9. We also raise a high Ridge in the Middle of each Interval above the Wheat before Winter, to protect it from the cold Winds, and to prevent the Snow from being driven away by them. And the Furrows or Trenches, from whence the Earth of these Ridges is taken, serve to drain off the Water from the Wheat, so that it being drier, it must be warmer than the harrow'd Wheat, which has neither Furrows to keep it dry, nor Ridges to shelter it, as every Row of ours has on both Sides of it.

IV. *The Condition in which the Land is left after a Crop.*

The different Condition the Land is left in after a Crop, by the one and the other *Husbandry*, is not less considerable than the different Profit of the Crop.

A Piece of eleven Acres of a poor thin chalky Hill, was sown with Barley in the common Manner, after a Ho'd Crop of Wheat, and produced full five Quarters and a half to each Acre (reckoning the Tythe) which was much more than any Land in all the Neighbourhood yielded the same Year; tho some of it be so rich, as that one Acre is worth three Acres of this Land: And no Man living can remember that ever this produced above half such a Crop before, even when the best of the common Management has been bestow'd upon it.

A Field that is a sort of a Heath Ground, us'd to bring such poor Crops of Corn, that heretofore the Parson carry'd away a whole Crop of Oats from it, believing it had been only his Tythe. The best Management that ever they did or could bestow upon it, was to let it rest two or three Years, and then fallow and dung it, and sow it with Wheat, next to that with Barley and Clover, and then let it rest again; but I cannot hear of any good Crop that it ever produced by this or any other of their Methods; 'twas still reckoned so poor, that no

no body cared to rent it. They said Dung and Labour were thrown away upon it; then immediately after two sown Crops of black Oats had been taken off it, the last of which was scarce worth the Mowing, it was put into the Hoing Management, and when Three ho'd Crops (1) had been taken from it, it was sown with Barley, and brought a very good Crop, much better than ever it was known to yield before; and then a good Crop of ho'd Wheat succeeded the Barley, and then it was again sown with Barley, upon the Wheat Stubble; and that also was better than the Barley it used to produce.

Now, all the Farmers of the Neighbourhood affirm, that it is impossible but that this must be very rich Ground, because they have seen it produce six Crops in six Years, without Dung or Fallow, and never a one of them fail. But, alas! this different Reputation they give to the Land, does not at all belong to it, but to the different Sorts of *Husbandry*; for the Nature of it cannot be alter'd but by that, the Crops being all carried off it, and nothing added to supply the Substance those Crops take from it, except (what Mr. *Evelyn* calls) the Celestial Influences, and that these are received by the Earth, in Proportion to the Degrees of its Pulveration.

A Field was Drilled with Barley after a Ho'd Crop, and another adjoining to it on the same Side of the same poor Hill, and exactly the same Sort of Land, was drill'd with Barley also, Part of it after the sown Crop, the same Day with the other; there was only this Difference in the Soil, that the former of these had no manner of Compost on it for many Years before, and the latter was dunged the Year before, yet its Crop was not near so good as that which followed the ho'd Crop (2); tho' the latter had twice the Plowing that the former had before Drilling, and the same Hoings afterwards, *viz.* Each was ho'd three times.

A Field of about seventeen Acres was Summer fallowed, and drill'd with Wheat, and with the Hoing, brought a very good Crop (except Part of it, which being eaten by trespassing Sheep in the Winter, was somewhat blighted); the *Michaelmas* after that was taken off, the same Field was drilled again with Wheat, upon the Stubble of the former, and ho'd: This second Crop was a good one, scarce any in the Neighbourhood better. A Piece of Wheat adjoining to it, on the very same Sort of Land (except that this latter was always reckoned better, being thicker in Mould above the Chalk) sown at the same time on dung'd Fallows, and the Ground always dung'd once in three Years, yet this Crop fail'd so much, as to be judged, by some Farmers, not to exceed the Tythe of the other: That the ho'd Field has receiv'd no Dung or Manure for many Years past, it lying out of the Reach for carrying of Cart-Dung, and no Fold being kept on my Farm: But I cannot say, I think, there was quite so much Odds betwixt this second undung'd ho'd Crop and the sown; yet this is certain, that the former is a good, and the latter a very bad Crop.

I could give many more Instances of the same Kind, where ho'd Crops and sown Crops have succeeded better after ho'd Crops than after sown Crops, and never yet have seen the contrary; and therefore am convinced, that the Hoing (if it be duly perform'd) enriches the Soil more than Dung and Fallows, and leaves the Land in a much better Condition for a succeeding Crop; the Reason I take to be very obvious. The artificial Pasture of Plants is made and increased by Pulveration only; and nothing else there is in our Power to enrich our Ground, but to pulverize it, and keep it from being exhausted by *Vege-*

(1) These Three Ho'd Crops were of Turneps and Potatoes.
(2) This was a Wheat Crop, and often well Ho'd.

tables.

tables. (1) (Superinductions of Earth are an Addition of more Ground, or changing it, and is more properly Purchasing than Cultivating.)

Their one Year's Tillage, *which is but two Plowings before Seed-time, commonly makes but little Dust, and that which it does make, has but a short time to lie exposed for Impregnation; and after the Wheat is sown, the Land lies unmoved for near twelve Months, all the while gradually losing its Pasture, by subsiding, and by being continually exhausted in feeding a treble Stock of Wheat Plants, and a Stock of Weeds, which are sometimes a greater Stock. This puts the* Virgilians *upon a Necessity of using of Dung, which is, at best, but a* Succedaneum *of the Hoe; for it depends chiefly on the Weather, and other Accidents, whether it may prove sufficient by Fermentation to pulverize in the Spring, or no: And 'tis a Question whether it will equal two additional* (2) *Hoings, or but one; tho', as I have computed it, one Dunging costs the Price of one hundred Hoings.*

'Tis possible, perhaps, to pulverize the Ground with a Pen, and they seem to act almost as oddly, when, at such a vast Expence, instead of a Hoe, they make Use of a T——, to help them in their Pulveration.

When they have done all they can, the Pasture, they raise, is generally too little for the Stock that is to be maintain'd upon it, and much the greatest Part of the Wheat Plants are starved; for from twenty Gallons of Seed they sow on an Acre, they receive commonly no more than twenty Bushels of Wheat in their Crop, which is but an Increase of Eight Grains for one: Now, considering how many Grains there are in one good Ear, and how many Ears on one Plant, we find, that there is not one Plant in ten that lives 'till Harvest, even when there has not been Frost in the Winter sufficient to kill any of them; or if we count the Number of Plants that come up on a certain Measure of Ground, and count them again in the Spring, and likewise at Harvest, we shall be satisfied, that most, or all of the Plants that are missing, could die by no other Accident than want of Nourishment.

They are obliged to sow this great Quantity of Seed, to the End that the Wheat, by the great Number of Plants, may be the better able to contend with the Weeds; and yet, too often at Harvest, we see a great Crop of Weeds, and very little Wheat among them. Therefore, this Pasture being insufficient to maintain the present Crop, without starving the greatest Part of its Plants, is likely to be less able to maintain a subsequent Crop, than that Pasture which is not so much exhausted.

When their Crop of Wheat is much less than ours, their Vacancies (if computed all together) may be greater than those of our Partitions and Intervals; theirs, by being irregular, serve chiefly for the Protection of Weeds; for they cannot be plow'd out, without destroying the Corn, any more than Cannons Firing at a Breach, whereon both Sides are contending, can kill Enemies, and not Friends.

Their Plants stand on the Ground in a confused Manner, like a Rabble; ours like a disciplin'd Army; we make the most of our Ground; for we can, if we please, cleanse the Partitions with a Hand-Hoe (3); and for the rest, if

(1) It may be asked, How 'tis possible that eight Hoings, which are but equal, in Labour, to two plain Plowings, should so much exceed three plain Plowings, as to procure as good or a better Crop without Manure, than the common three Plowings can do with Manure, and enrich the Land also?
The Answer, is That each Hoing of the Five or Six being done to the Wheat-Plants, though it does not clean Plow the whole Interval underneath, yet it changeth the whole external Superficies (or Surface) thereof, whereby it becomes impregnate by the nitrous Air, as much as if it were all clean Plowed at the time of every Hoing, and the Weeds are as much stifled, or suffocated.
(2) *Additional*, because there must first be several Hoings to make our treble Row equal to an undunged Six-Foot Ridge of *sown* Wheat.
(3) Of all annual Weeds.

the Soil be deep enough to be drill'd on the Level, (1) in treble Rows, the Partitions at six Inches, (2) the Intervals five Foot; five Parts in six of the whole Field may be pulveriz'd every Year, and at proper times all round the Year.

The Partitions being one sixth Part for the Crop to stand on, and to be nourished in the Winter, one other sixth Part being well pulveriz'd, may be sufficient to nourish it from thence 'till Harvest; the Remainder, being two Thirds of the whole, may be kept unexhausted, the one Third for one Year, and the other Third of it two Years, all kept open for the Reception of the Benefits descending from above, during so long a time; whilst the sowed Land is shut against them, every Summer, except the little time in which it is fallow'd, once in three Years, and a little, perhaps, whilst they plow it for Barley in the Winter, which is a Season seldom proper for pulverizing the Ground.

Their Land must have been exhausted as well by those supernumerary Plants of Wheat, while they lived, as by those that remain for the Crop, and by the Weeds. Our Land must be much less exhausted, when it has never above one third Part of the Wheat-Plants to nourish that they have, and generally no Weeds; so that our ho'd Land having much more Vegetable Pasture made, and continually renewed, to so much a less Stock of Plants, (3) must needs be left, by every Crop, in a much better Condition than theirs is left in by any one of their sown Crops, altho' our Crops of Corn at Harvest be better than theirs. (4)

They object against us, saying, That sometimes the Hoing makes Wheat too strong and gross, whereby it becomes the more liable to the Blacks (or Blight of Insects); but this is the Fault of the Hoer, for he may chuse whether he will make it too strong, because he may apply his Hoings at proper times only, and apportion the Nourishment to the Number and Bulk of his Plants. However, by this Objection they allow, that the Hoe can give Nourishment enough, and therefore they cannot maintain that there is a Necessity of Dung (5) in the *Hoing Husbandry*; and that, if our Crops of Wheat should

(1) This is only put as a Supposition; for I have for these several Years left off Drilling on the Level, and do advise against it; because altho' Mould should not be wanting for the Partitions in deep Rich Land; yet 'tis much more difficult to Hoe on the Level than on Ridges.

(2) But when 'tis drilled upon Ridges, the Proportion is less by how much the Partitions being thicker in Mould, contain more than a sixth Part of the whole six Foot of Earth, and the Proportion of unexhausted Earth will be alter'd likewise; and I only mention these Distances to avoid Fractions.

(3) Therefore, whenever a Soil receives more Supplies of fine Earth from the Atmosphere, than is exhausted by all the Plants that grow in the Soil, it becomes richer; but if the contrary, then it becomes poorer.

(4) On an undung'd low six Foot Ridge, we have three Rows, eight Inches asunder, all which being equal, during the Winter, but each of the two outside Rows at Harvest producing ten times as much Wheat as the middle Row doth, all three together produce a Quantity equal to one and twenty of this middle Row. Now, supposing the Roots of this Row not to reach through the outside Rows, so as to receive any Benefit from the Ho'd Intervals, then this Row might only be equal to one of nine Rows, which should have been drilled eight Inches asunder on this Ridge, and then our three would only be equal to twenty one of such nine Rows. But since it can be demonstrated, that the Roots of our middle Row do pass through both the outside Rows far into the Ho'd Intervals, we may well suppose it to be at least double to what it would have been, if it had had no Benefit from the Hoing, and then our three will be equal to forty two of such nine unho'd Rows. Thus our Crop is thirty three, in forty two (or almost four Parts in five) increased by the Hoing; for though many Fields of Wheat have been drilled all over in Rows eight Inches asunder, it never has been judged in twenty Years Experience, that a Crop so planted, though not Ho'd, was by its Evenness and Regularity, less, *Cæteris Paribus*, than a Crop sown at random.

(5) As for the Quantity of Vegetable Matter of Dung, when reduced to Earth by Putrifaction, it is very inconsiderable, and, of many Sorts of Manure, next to nothing.

The almost only Use of all Manure, is the same as of *Tillage*, *viz.* the Pulveration it makes by Fermentation, as *Tillage* doth by Attrition or Contusion; and with these Differences, that Dung, which is the most common Manure, is apt to increase Weeds, as *Tillage* (of which *Hoing* is chief) destroys them, and Manure is scanty in most Places, but *Tillage* may be had every where. Another Difference is, the vast Disproportion of the Price of Manure and that of *Tillage*.

Note, As we have no Way to enrich the Soil, but by Pulveration of Manure, or of Instruments, or of both; so Nature has ordain'd, that the Soil shall be exhausted by nothing, but by the Roots of Plants.

happen

happen to suffer, by being too strong, our Loss will be less than theirs, when that is too strong, since it will cost them nine times our Expence to make it so.

A second Objection is, that as Hoing makes poor Land become rich enough to bear good Crops of Wheat for several Years successively, the same must needs make very good Land become too rich for Wheat. I answer, That if possibly it should so happen, there are two Remedies to be used in such a Case; the one is to plant it with Beans, or some other *Vegetables*, which cannot be over-nourished, as Turneps, Carots, Cabbages, and such like, which are excellent Food for fatting of Cattle; or else they may make Use of the other infallible Remedy, when that rich Land, by producing Crops every Year in the *Hoing-Husbandry*, is grown too vigorous and resty, they may soon take down its Mettle, by Sowing it a few Years in their *Old Husbandry*, which will fill it again with a new Stock of Weeds, that will suck it out of Heart, and exhaust more of its Vigour, than the Dung, (1) that helps to produce them, can restore.

There is a third Objection, and that is, that the Benefit of some Ground is lost where the *Ho-Plow* turns at each End of the Lands; but this cannot be much, if any, Damage; because about four square Perch to a Statute Acre, is sufficient for this Purpose, and that, at the Rate of *ten Shillings* Rent, comes to but *Three-pence*, tho' this varies, according as the Piece is longer or shorter; and supposing the most to be eight Perch, that is but *Six-pence per* Acre; and that is not lost neither, for whether it be of natural or artificial Grass, the the *Ho-Plow* in turning on it, will scratch it, and leave some Earth on it, which will enrich it so much, that it may be worth its Rent for Baiting of Horses or Oxen upon it. And besides, these Ends are commonly near Quick-Hedges or Trees, which do so exhaust it, that when no Cattle come there to manure it, 'tis not worth the Labour of Plowing it.

(1) Dung made of the Straw of Sown Corn, generally abounds with the Seed of Weeds,

CHAP. XX. *Of PLOWS.*

BY what Means *Plows* and *Tillage* it self came at first to be invented, is uncertain; therefore we are at Liberty to Guess: And it seems most probable, that it was (like most other Inventions) found out by Accident, and that the first Tillers (or Plowers) of the Ground, were Hogs: Men in those Days having sufficient Leisure for Speculation, observ'd, that when any Sort of Seed happen'd to fall on a Spot of Ground well routed up by the Swine, (whom Instinct had instructed to dig in Search of their Food) it grew and prospered much better than in the whole unbroken Turf. This Observation must naturally induce rational Creatures to the Contrivance of some Instrument, which might imitate, if not excel Brutes in this Operation of breaking and dividing the Surface of the Earth, in order to increase and better its Product.

That some such Accident gave Men the first Hints of *Original Agriculture*, may be inferr'd from the very little (or no) Probability of its being invented originally upon Arguments which might convince the Understanding (by just Conclusions from Ideas of the Earth and Vegetation) of any reasonable Grounds to hope, that the Effect of increasing the Earth's Produce, should follow the *Cause of Tillage*; or, in other Words, Why it should produce more when Tilled, than when Untilled. Therefore, 'tis very unlikely that Men should *Begin* to take Pains to Till the Land, without any sort of Reason why they did it. And

no

no ſuch Reaſon could they have, before the Invention, as they had afterwards. For when they *Accidentally* ſaw that *Effect* follow that *Cauſe*, then they were well convinced it did ſo. But tho' this Argument, *viz. Tillage* increaſes the Product of the Earth, *becauſe it does*, has been ſufficient to continue the Practice of *Tillage* ever ſince; yet 'tis impoſſible for the Inventors to have had this Argument before the Invention, in caſe it had been invented by Men, and not fortuitouſly diſcover'd.

Had there ever been extant any other, or *Better Arguments* whereon this Practice, ſo uſeful to Mankind, was founded; ſure, ſome of all the Great and Learned Authors, who have writ on this Subject, would have mention'd them. Philoſophers, Orators, and Poets have treated of it in the ſame Theory by which it was firſt diſcover'd, and by no other, *viz.* Land produces more when Tilled; and ſome ſeem to ſay, the more 'tis Tilled, the more it produces. It does, *becauſe it does*; not a Word of the Paſture of Plants, or any thing like it. So that all the ancient *Scriptores de Re Ruſticâ* have done, was only to keep that Theory in the ſame Degree of Perfection in which the firſt Diſcoverers received it.

The briſtled Animals broke up the Ground, becauſe they uſed to find their Food there by Digging; Men Till it, becauſe they find *Tillage* procures them better Food than Acorns.

The Reaſons are the ſame for one and the other.

Theſe Writers aſham'd to acknowledge ſo noble a Diſcovery to be owing to ſo mean a Foundation, make no mention of the true Teachers, but attribute the Invention to *Ceres*, (1) a Goddeſs of their own making; ſhe, as they pretend, firſt taught the Art of *Tillage*. With this Fable they were ſo well pleaſed, that they never attempted to improve that Art, leſt they ſhould derogate from the Divinity of *Ceres*, in ſuppoſing her Invention imperfect.

With what Inſtrument Men firſt Tilled the Ground, we don't know exactly; but there may be Reaſons to believe it was with the Spade, and probably a wooden one, and very rough.

For whilſt People liv'd on Acorns, there was no Uſe of the Smith, ſuch Food required no Knives for eating it, nor was it worth while to make Swords to fight for it; and without Iron the Spade could not be well hewn, or ſhap'd; but if it had been ſuch as it is at preſent, there never was any thing comparable to it, for the true Uſe of *Tillage*. Yet the Spade could not make that Expedition, which was neceſſary when *Tillage* became general in the Fields; and therefore in time the Spade came wholly to be appropriate to the moſt perfect Sort of *Tillage* in the Garden. Then the *Plow* ſupply'd the Place of the Spade in the Field; and tho' it could not (ſuch as it was) Till the Land near ſo well, yet it could Till ten times more of it, and with leſs human Labour.

Why they did not improve the *Plow*, ſo that it might alſo Till as well as the Spade, ſeems owing to their Primitive Theory, which gave no Mathematical Reaſon to ſhew wherein the true Method of *Tillage* did conſiſt, *viz.* in dividing the Earth into many Parts, to increaſe its internal Superficies, which is the Paſture of Plants.

The Difference betwixt the Operation of the Spade and that of the com-

(1) They did well indeed, to impute the Invention to a Woman; becauſe the Reaſons whereon it was founded, were unbecoming of a Man: Being without Principles, it could not (likely) be improved, unleſs ſome Mathematical ones were diſcover'd.

They were very Unjuſt, to give the Reputation of Inventrix of *Tillage* to *Ceres*, who could be no better than a Plagiary, and make poor *Cicely*, from whoſe Family ſhe ſtole it, fall as a Sacrifice to her Altar, as the *Porca Præcidanea* did, amongſt the *Romans*. But Swine had practiſed the Art of Turning the Soil, and ſo had Men, long before the fictitious Deity of *Ceres* was invented.

mon

mon *Plow*, is only this: that the former commonly divides the Soil into ſmaller Pieces, and goes deeper.

How eaſy and natural it is to contrive a *Plow* that may equal the Spade, if not exceed it, in going deeper, and cutting the Soil into ſmaller Pieces, than the Spade commonly does, I leave to the Judgment of thoſe who have ſeen the Four-coulter'd *Plow*.

The *Plow* deſcrib'd by *Virgil* had no Coulter; neither do I remember to have ſeen any Coulter in *Italy*, or the South of *France*; and, as I have been inform'd, the *Plows* in *Greece*, and all the *Eaſt*, are of much the ſame Faſhion; neither is it practicable to uſe a Coulter in ſuch a *Plow*; becauſe the Share does not cut the Bottom of the Furrow horizontally, but obliquely; in going one way, it turns off the Furrow to the Right Hand, but in coming back, it turns it to the Left; therefore, if it had a Coulter, it muſt have been on the wrong Side every other Furrow: And beſides, as the Handle (for it has but one) always holds the *Plow* towards one Side, with the Bottom of the Share towards the unplow'd Land, it would cauſe the Coulter to go much too low when it went on the Furrow Side, and it would not touch the Ground, when it went on the Land Side.

'Tis a great Miſtake in thoſe, who ſay, *Virgil's Plow* had two Earth-Boards, for it had none at all; but the Share it ſelf always going obliquely, ſerv'd inſtead of an Earth-Board, and the two Ears which were the Corners of a Piece of Wood lying under the Share, did the Office of Ground-Wreſts: This Faſhion continues to this Day in thoſe Countries, and in *Languedoc*.

This Sort of *Plow* performs tolerably when Ground is fine, and makes a ſhift to break up light Land; and I could never find any other Land there: I am ſure, none comparable to ours for Strength; and it would be next to impoſſible, to break up ſuch as we in *England* call *Strong Land*, with it.

I do not find, that the Arable Lands about *Rome* are ever ſuffered to lie ſtill long enough to come to a Turf; but I have obſerv'd in the low rich Lands in the *Calabria's*, ſubject to the Invaſions of the *Turks*, that there is Turf, and that theſe *Plows* go over the Land two or three times before the Turf of it is all broken, tho' the Soil be a very mellow Sort of Garden-Mould. Having no Coulters to cut it, they break and tear the Turf into little Pieces. This was done in the Month of *November*; and had I not ſeen Men and Oxen at the Work, or had there been Oaks in the Place, I ſhould rather have thought that *Tillage* perform'd by a Race of the firſt Teachers of it, in muzzling Acorns, than by *Plows*. However, the Mould being naturally very mellow, when the Turf is broken with ſhallow Plowing, they can plow deeper afterwards.

The *Engliſh Plows* are very different from the *Eaſtern*, as in general the Soil is.

Theſe, when well made, cut off the Furrow at the Bottom horizontally; and therefore, it being as thick on the Land Side, as on the Furrow Side, the *Plow* cannot break it off from the whole Land, at ſuch a Thickneſs (being ſix-times greater than the *Eaſtern Plows* have to break off), and muſt of Neceſſity have a Coulter to cut it off; by this Means the Furrow is turn'd perfectly whole, and no Part of the Turf of it broken; and if it lie long without new Turning, the Graſs from the Edges will ſpread and form a new Turf (or Sward) on the other Side, which was the Bottom of the Furrow before Turning, but is now become the Surface of the Earth, and may ſoon become greener with Graſs than before Plowing; and often the very Roots ſend up new Heads to help ſtock the reverſed Furrow, the former Heads being converted into Roots, ſo that 'tis doubly cloathed and braced on both Sides, or,

as

as it were, kay'd together, firm and solid, almost as a Plank; it may be drawn from one Side of a Field to the other, without breaking, and might possibly be made Use of, instead of *Virgil's Crates Viminea*, for harrowing or smoothing of fine Till'd Ground; but not without much Time, Labour, and Difficulty can it be made such it self.

If you plow whole strong turfy Furrows cross-ways, as *Virgil* directs, and as it is too commonly practised, the Coulter cannot easily cut them, because, being loose underneath, they do not make a sufficient Resistance or Pressure against its Edge, but move before it, and so are apt to be drawn and driven up into Heaps, with their Surfaces lying all manner of Ways, and situate in all manner of Postures: So the Turf, which is not turned, continuing in the open Air, grows on, and with its vigorous Roots, holds the Earth fast together, and will not suffer the necessary Division to be made, which would be, if the Turf were rotten, and which is the End of all *Tillage*, *viz.* to increase the Pasture of Plants.

Next, some have vast heavy Drags, with great long Iron Tines in them; and tho' these huge broken Pieces of Furrows being looser than before, require keener Edges to cut them; yet these Drag-Tines have no Edge at all, but are as blunt as the Furrows they should cut. These Drags draw them sometimes into larger Heaps, leaving the *Under-Stratum* bare betwixt them, only shaking off some of their Mould in tumbling them about, and scratching their Surfaces, without reducing them to a moderate Fineness, until this ill-broken Land has, for above a Year, and some times longer, entertained Plows, Cattle, and Men, with a frequent laborious Exercise, for which they are obliged to the one Coulter.

If the Soil be shallow, it may be broke up with a narrow Furrow, which will the sooner be brought in Tilth; but if it be a deep Soil, the Furrows must be proportionably large, or else a Part of the good Mould must be left under unmoved, and so lost; for a *narrow* Furrow cannot be plowed deep, because the *Plow* will continually slip out from the hard Land toward the Right-hand, unless the rising Furrow be of sufficient Weight to press the *Plow* towards the Left, and keep it in its Work: The deeper you plow, the greater Weight is required to press it; so that the deeper your Land is, the worse (or into the larger Furrows) must it be broke up with one Coulter, insomuch, that if the Land be strong, (as most deep Ground in *England* is) 'tis a Work of some Years to conquer it, after it has been rested. And often it happens, that the excessive Charge of this *Tillage* reduces the Profit of rich Land below that of ~~much~~ poor~~er~~.

This gives an Opportunity to deceitful Servants, of imposing upon their ignorant Masters. They plow such deep Land with a small shallow Furrow, to the End the Turf and Furrows may be broken, and made fine the sooner; pretending they will plow it deeper the next time (which is called Stirring) which these Rogues know very well cannot be done, and intend no more than that, the *Plow* coming the easier after the Horses, their Coats may shine the better, and tho' there be no Crop at Harvest, they must have four Meals a Day, all the Year, and extravagant Wages at *Michaelmas*, or at any time of the Year, when they think fit to misbehave themselves.

This Sort of Land must not be stirred, *i. e.* plowed the second time in wet Weather, for that will cause the Grass and Weeds to multiply, besides the treading the Ground into hard Dabs, *&c.* And in dry Weather, the *Plow* will never enter any deeper than it went the first time, the Resistance below being so much more than the Pressure above, the *Plow* will rise up continually; or if it

it goes deep enough for the Weight of Earth to keep it down, another Inconvenience will follow, which is that mention'd by *Columella*, Page 47. *Quod omnis humus quamvis lætissima, tamen inferiorem partem jejuniorem habet, eamque attrahunt excitata majores Glebæ; quo evenit, ut infœcundior materia mista pinguiori segetem minus ubirem reddat.* The vulgar *English* Phrase is, It *Spauits* up from below the Staple. Hence the treacherous Plowman is secure of an easy Summer's Work, if he can perswade his Master to suffer him to fallow the Ground with a shallow Furrow.

Another way to conquer a strong Turf, is, to plow it first with a *Breast-Plow*, very thin; and when the Sverd is rotten, then plow it at the proper Depth: But this Method is (besides the extraordinary Charge of it) liable to other great Misfortunes. If the Turf be pared up in Winter, or early in the Spring, 'tis a chance but the Rains cause it to grow stronger than before, instead of its Rotting.

And if it be pared later, tho' dry Weather do follow, and continue long enough to kill the Turf, yet this loses Time, the Season of Plowing is retarded, for all the Staple still remains untill'd, and before that can be well done, the Year is too far spent for sowing it with Wheat, which is the most proper Grain for such strong Land, (1) and few will have Patience to wait, and plow on till another Wheat Seed Time. The dry Weather also, which in Summer kills the Sverd, renders the Plowing obnoxious to most or all the Evils aforemention'd.

A Farmer enquires concerning the *Four Coulter Plow*, as in the following *Dialogue.*

Farm. *What must we do then? Must we have Recourse to the Spade for breaking up our rich, strong, sverdy Land?*

Resp. If you can procure Men to dig it faithfully in Pieces, not above two Inches and a half thick, at the Price of about eight Shillings *per* Acre, it would do very well, and answer all the Ends of *Tillage*; but tho' you bargain with them to dig it at that Size for three Pounds *per* Acre, you will find, upon Examination, most of the Pieces or Spits, which are dug out of your Sight, to be of twice that Thickness. And no great Quantities can be this way managed, altho' the Price of Corn should answer such an extravagant Expence.

Farm. *Since 'tis so difficult to bring our strong Land into Tilth, after it has rested, that it cannot be speedily done by a* Plow *without a Coulter, or by one with a Coulter, in wet Weather or dry, nor with a* Breast-Plow, *without a certain Expence, and an uncertain Success, the Spade is too chargeable a* Tillage *for the Field: It seems to me, upon the whole, that we are Losers by this* Inaratæ gratia Terræ, *unless we could contrive some other Method of reducing it sooner, and with less Charge, into Tilth; for, I observe, that when we sow it upon the Back, the Corn and Grass (or Couch) coming both together, exhaust the Ground so much, that by that time we can (which is about three Years) reduce the great Lumps to a tolerable Fineness, it grows full of Grass and Weeds (which we call Foul) and loses that Fertility we expected it should acquire by Rest, becoming, in our Terms, both out of Tilth and out of Heart.*

Resp. If you know all this to be true, and that, without a Coulter you cannot break it up at all; and that, with one Coulter you cannot any way cut the Furrow small enough, or less than ten Inches broad; why do not you cut it with four Coulters, which will reduce the same Furrow into four equal Parts, of two Inches and a half each in Breadth, and of the Depth of the Staple, tho' that should be two Spit, or sixteen Inches deep.

(1) Besides, most strong Band has Stones in it, which will not admit the Use of the *Breast-Plow.*

Farm. *How can that be done?*

Resp. Every Jot as easily as with one Coulter. For before the Furrow is rais'd by the Share, it lies fast, and makes a sufficient Resistance equally against the Edges of all the Coulters, tho' after it be rais'd and loose, it yields and recedes every way, except downwards, so that it cannot be cut by any Edge, but such as attacks it perpendicularly from above, as that of the Spade does.

Farm. *This seems, to me, reasonable, and having very lately heard Talk of this* Plow, *I would gladly know more of it.*

Resp. The Furrow being cut into four Parts, has not only four-times the Superficies on the eight Sides, which it would have had on two Sides; but it is also more divided cross-ways, *viz.* The Ground-wrest presses and breaks the lower (or Right-Hand) Quarter; the other three Quarters in rising and coming over the Earth-Board, must make a crooked Line about a Fourth longer than the strait one they made before moved; therefore, their Thinness not being able to hold them together, they are broken into many more Pieces, for want of Tenacity to extend to a longer Line, contrary to a whole Furrow, whose great Breadth enables it to stretch and extend from a shorter to a longer Line, without breaking, and as it is turn'd off, the Parts are drawn together again by the Spring of the Turf or Swerd, (1) and so remain whole after Plowing. Thus the Four-Coulter'd *Plow* can divide the Soil into above twenty times more Parts than the common *Plow*; and sometimes when the Earth is of a right Temper betwixt wet and dry, the Earth-Board, in turning the Furrows off, will break them into Dust, having more Superficies than is made by four common Plowings; and it is impossible there should be any large Pieces amongst it.

Now, What a prodigious Advantage must the Influences of the Atmosphere have upon these small Parts, for making a further Division of them? Frost, Water, Drought, and nitrous Air easily penetrate to their very Centers, which cannot in the largest of them be more than one Inch and a quarter distant from their Superficies. This Advantage, with a few subsequent common Plowings perform'd in proper Seasons, resolves the Earth almost all to a Powder. The Swerd, some being immers'd or bury'd and mix'd among so great a Proportion of Mould, is soon rotten and lost, some of the Swerd lying loose a-top, the Earth presently drops out of it, and then the Roots are dry'd up, and die. Thus is the whole Staple of the Ground brought into perfect Tilth in a very short time beyond what the Spade ever does in such swerdy Land.

Farm. *What Sort of Weather is best for using this Plow?*

Resp. Any Weather, except the Ground be so dry and hard, that the *Plow* cannot enter it; but 'tis very proper to be done, when the Earth is so wet, that by no means it ought to be plowed with any other *Plow*; for it never can be too moist for this, unless the Cattle which draw it, be mired: because, tho' all the Cattle should not go in the Furrow, yet their Treadings are cut so small by the Coulters, that the Earth is not kept from dissolving, as when turn'd off whole in common *Tillage*. 'Tis observ'd, that the Incisions made by the Coulters on swerdy Land, will not heal or so close up, but that they will open again by the next Plowing, tho' it be a great while after. A Farmer who uses this *Plow*, may Till in all Weathers and all Seasons of the Year, either in Fallowing with this, which is best in wet, or in stirring with the common Ones,

(1) A swerdy Furrow cut off by only one Coulter, being whole, is apt to stand up on its Edge, or lie hollow, and then being open to the Air, it does not rot; but when it is cut by several Coulters, it has not Strength to support it self, it falls down, lies close to the Earth under it, and excluding the free Air from the Turf, it soon becomes rotten.

which

which must be done in dry Weather (1); and when the Ground is broke up with this, it may be stirr'd in the driest Weather that can be, without the Danger of tearing (or spaulting) up of the *Under-Stratum* along with the Staple, because this is all broken before, and then no more can rise with it; as it does to the Ruin of the Soil, when in common *Tillage* they go deeper the second time than the first; also, if there be a Necessity of stirring some Sort of Land when 'tis wet, it ought either to be done with this *Plow*, or else with a common one drawn by a single Row of Cattle treading all in the Furrow; for tho' some Land be very fine, yet, when plow'd by a double Row of Cattle in wet Weather, it will be made into large Pieces by the Treading, and perhaps not dissolve again in a long time, therefore 'tis better to be prevented.

Farm. *I perceive this* Plow *lays the Foundation for all good* Husbandry; *and there can be no other way to bring Land into perfect Tilth in so short a Time, or with so little Expence. And I am convinc'd, that no Farmer ought to be without it, who desires to be free from the Danger of his Land being ever out of Tilth; but I have heard it objected, that it is harder to draw than the common* Plows: *And that its Beam being longer, upon account of the four Coulters, it lies farther behind, and comes harder after the Horses.*

Resp. I must confess, there is something in that Objection; for this *Plow* being something longer, may be a little the harder Draught, and also its Weight and Strength must bear a Proportion to the Length of it. But this small Increase of the Draught would have been a much stronger (if not a fatal) Objection, had that Custom been general, of Horses drawing by their Tails, as 'tis said to have been formerly in some Places; for then, perhaps, a sufficient Strength of Horses could not be apply'd to the *Plow*. But in Countries where Traces are in Use, every Horse of the Team may draw the *Plow* equally, and then there will be no other Inconvenience, besides the adding one Horse, or keeping a stronger Team: And he cannot be wise, who would lose the Profit of his Land, for the Odds of sometimes adding a Horse to his *Plow*. And I am very certain, that this *Plow* requires a much less Strength of Cattle to draw it, in moist Weather, which is the most proper to use it in, than to draw a common *Plow* in the same Ground, and at the same Depth, in dry Weather; and can seldom be used safely in any other. And the Vulgar, who have always a wrong Cause ready at Hand to apply to every thing, impute that Draught to the Fashion of the *Plow*, which ought to be imputed to its going deeper; and this great Depth at which 'tis capable of Plowing, *viz.* Two Spit deep is one extraordinary Benefit of it, tho' it may, on Occasion, go as shallow as any.

The Draught is not so much increased by adding three Coulters, as may be imagined; for when the Ground is moist, the Incisions are easily made by the Edges; and when they are cut small, the Furrows rise much more easily upon the Share and Earth-Board, than if whole.

Farm. *If this* Plow *be so beneficial, having so many Advantages, and only the two Inconveniencies, one of requiring a little more Strength to draw it, and the other its being unfit for dry hard Ground, I wonder why it is not become more Common?*

(1) In this Way of Plowing, there's no need to observe the critical Day of the Moon, nor whether she be increasing or decreasing, neither what Wind blows, as *Virgil* so dogmatically enjoins to be precisely observ'd; and some of the Ancients prescribe the very Hour of the Day, besides innumerable Degrees of wet and dry Weather, so that without all these Accidents meet, they tell us we must abstain from Plowing. Our Plowmen would be glad their Masters were as Superstitious, for then the *Plow* might keep Holidays enough. But far from all this, we do not even observe at what time of the Sun's Course, we Till our Land, and find it always succeeds best when the Soil can be broken into most Parts, without having any other Regard to Sun, Moon, Wind, or Weather; This *Plow* prevents the Injuries of them all.

Resp.

Resp. It has been used with very great Success for these several Years last past, but never like to be Common, unless it be described in a more Geometrical Manner, than any *Plow* has hitherto been; for the *Plow-wrights* find it difficult enough to make a common *Plow* with one Coulter to perform as it ought, for want of the necessary Rules of their Art. 'Tis upon this Account that the two-coulter'd *Plows* are used in few Places, though they have been found of excellent Use, and have been formerly Common: But, alas! when the Makers, who by their diligent Study and much Practice had attained the Perfection of their Art, for want of learning to write their Rules mathematically, and shew how the mechanical Powers were applicable to them, the Art was in a manner lost, at the Death of those Artists; and then the unskilful *Plow-wrights*, destitute of the true Rules, were not able to make a two-coulter'd *Plow* to perform well, and then it was left off. Very lately 'tis revived, since the three and four-coulter'd ones have been used; from whence some have made a shift to take the Rules of placing two Coulters into a *Plow*, and they begin to be common again; and, no doubt, will cease again as soon as the Rules are forgot.

'Tis strange that no Author should have written fully of the Fabrick of *Plows!* Men of greatest Learning have spent their Time in contriving Instruments to measure the immense Distance of the Stars, and in finding out the Dimensions, and even Weight of the Planets: They think it more eligible to study the Art of Plowing the Sea with Ships, than of Tilling the Land with *Plows*; they bestow the utmost of their Skill, learnedly, to pervert the natural Use of all the Elements for Destruction of their own Species, by the *Bloody* Art of War. Some waste their whole Lives in studying how to arm Death with new Engines of Horror, and inventing an infinite Variety of Slaughter; but think it beneath Men of Learning (who only are capable of doing it) to employ their learned Labours in the Invention of New (or even improving the Old) Instruments for increasing of Bread.

The easiest Method of perpetuating the Use of the many-coulter'd *Plows*, and other newly-invented Instruments of *Husbandry*, is by Models, *i.e.* the Things themselves in Little, and these may be all portable even in a Man's Pocket: Every Part must be fully described, with the true Dimensions, and the Mathematical Reasons on which their Contrivance is founded: Directions also for using them must be given at the same time that their Manner of Making is describ'd. In some the very Horses which draw, must be represented, to shew the Manner of fixing the Horses and the Traces: Cautions against all the Errors that may happen by the want of Experience in the Makers or Users, must be given.

When this is done, and the Rules put into a Method, the *New Hoing Husbandry*, in all its Branches, will be much more easy and certain than the *Old*; because there are no Mathematical Rules extant in any Method; and a Man may practise the old random Husbandry all his Life, without attaining so much Certainty in *Agriculture* as may be learn'd in a few Hours from such a Treatise.

The Rules, indeed, require much Labour, Study, and Experience to compose them; but when finish'd, will be most easy to practise: Like the Rules for measuring Timber; their Use is, at first Sight, easy to every Carpenter, and to most Artificers who work in Wood, but no illiterate Person is able to compose those Rules, or to measure Timber without them.

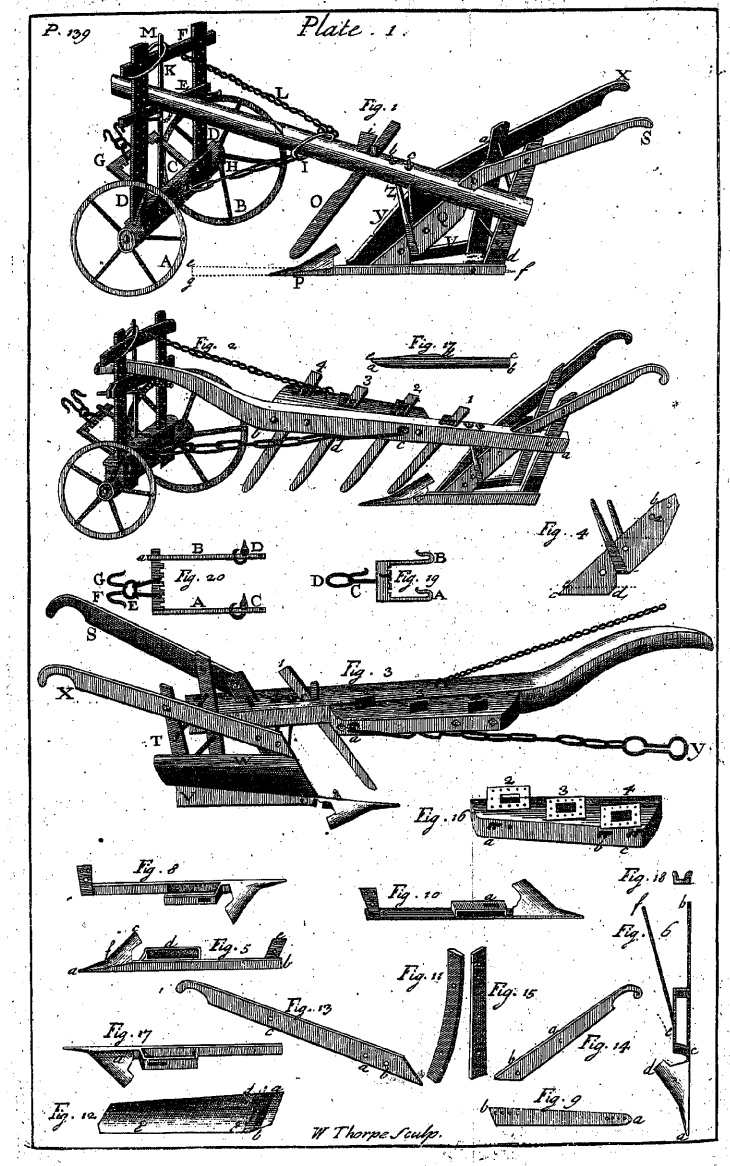

The Descr

TO describe all
Time and Lea
to be done by some-
present attempt little
In *Plate* 1. *Fig.* 1.
in *Berkshire*, *Hampsh*
Counties of *South-Br*
all Sorts of Land, e
and clog them up, so
But they have in
venience; which is do
iron Circles of the W
against the Ground,
which Motion throw
Wheels, which it wou
'Tis commonly divi
Plow-Tail.
The *Plow-Head* c
Spindle of Iron pass
and in the Wheels;
pendicularly, and ha
or sink the Beam, b
diminish the Depth
Crow-Staves pass at
the Wilds with its I
is drawn; H the T
Head, by the Collar
Hole in the Middl
Bridle-Chain, one
the other End to th
left Crow-Staff, by
End of the Gallows
and sometimes by th
The *Plow-Tail* c
P, and the Sheat C
its End; S the ho
by a Pin, and to t
which belongs to
Ground-Writ V is
is seen before the S
appears before the

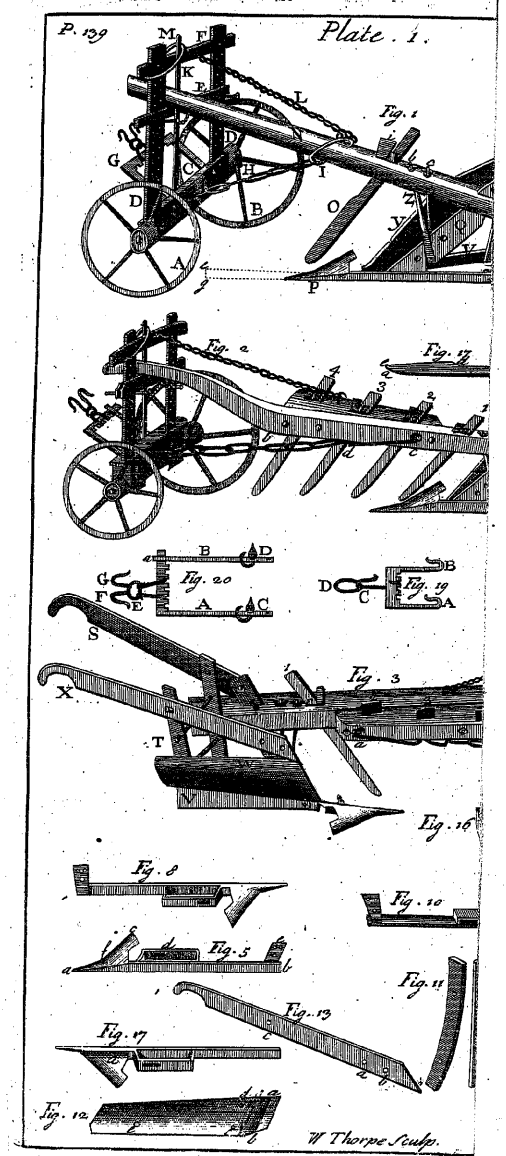

CHAP. XXI.

The Description of a *Four-Coulter'd Plow.*

TO describe all Parts of a *Plow* Geometrically, would require more Time and Learning than I am Master of; therefore leaving that to be done by some-body else, who is better qualified for it, I shall at present attempt little more than what relates to the three added Coulters.

In *Plate* 1. *Fig.* 1. is the Portrait of a common *Two-Wheel'd-Plow* used in *Berkshire*, *Hampshire*, *Oxfordshire*, and *Wiltshire*, and in most other Counties of *South-Britain*; and is generally esteemed the best *Plow* for all Sorts of Land, except such miry Clays that stick to the Wheels, and clog them up, so as they cannot turn round.

But they have in some Places, a Contrivance to prevent this Inconvenience; which is done, by winding Thumb-Ropes of Straw about the iron Circles of the Wheels, and about the Spokes. The Wheels pressing against the Ground, the Thumb-Ropes are distended on each Side; which Motion throws off the Dirt, and prevents its sticking to the Wheels, which it would otherwise do.

'Tis commonly divided into two Parts, *viz.* the *Plow-Head*, and the *Plow-Tail*.

The *Plow-Head* contains the two Wheels A, B, and their Axis or Spindle of Iron passing thro' the Box C, turning round both therein, and in the Wheels; the two Crow-Staves D, D, fastned into the Box perpendicularly, and having in each, two Rows of Holes, whereby to raise or sink the Beam, by pinning up or down the Pillow E, to increase or diminish the Depth of the Furrow; the Gallows F, thro' which the Crow-Staves pass at top, by Mortises, into which they are pinned; G the Wilds, with its Links and Crooks of Iron, whereby the whole *Plow* is drawn; H the Tow-Chain which fastens the *Plow-Tail* to the *Plow-Head*, by the Collar I, at one End, and by the other End passing thro' a Hole in the Middle of the Box, is pinned in by the Stake K; L the Bridle-Chain, one End whereof is fastened to the Beam by a Pin, and the other End to the Top of the Stake, which Stake is held up to the left Crow-Staff, by the With M, passing round it above, and under the End of the Gallows below; or instead of this With, by a Piece of Cord, and sometimes by the End of the Bridle-Chain, when that is long enough.

The *Plow-Tail* consists of the Beam N; the Coulter O; the Share P; and the Sheat Q; the Hinder-Sheat R, passing thro' the Beam near its End; S the short Handle, fastened to the Top of the Hinder-Sheat by a Pin, and to the Top of the Sheat by another Pin; T the Drock which belongs to the right Side of the *Plow-Tail*, and whereto the Ground-Wrist V is fasten'd, as is the Earth-Board, whose Fore-Part W is seen before the Sheat; and also the long Handle X, whose Fore-Part Y appears before the Sheat, and is fasten'd to the Drock by a Pin at a, the

the other End of which Pin, goes into the Beam. Z is the double Retch, which holds up the Sheat, and passes through the Beam to be fasten'd by its Screws and Nuts at b and c.

But without intrenching much farther upon the *Common Plow-Wright*'s Art, whose Trade is his Living, I'll hasten to shew the necessary Difference there is betwixt the *Common Plow*, and the *Four-Coulter Plow*, beginning with *Fig.* 2. where it is represented as standing upon a level Surface.

Fig. 2. And, *First*, The Beam differs in Length, being ten Foot four Inches long, as the other Plow-Beam is but eight Foot; it differs in Shape, as the other is streight from one End to the other, but this is streight only from a to b, and thence turns up of a sudden, in the Manner that is shewn in the Cut; so that a Line let down perpendicular, from the Corner at a, to the even Surface whereon the *Plow* stands, would be eleven Inches and a Half, which is its Height in that Place; and if another Line were let down, from the Turning of the Beam at b, to the same Surface, it would be one Foot eight Inches and a Half, which is the Height that the Beam stands from the Ground, at that Part; and a third Line let down to the Surface, from the Bottom of the Beam, at that Part which bears upon the Pillow, will shew the Beam to be two Foot ten Inches high above the Surface in that Part.

From the End a, to the Back-Part of the first Coulter, is three Foot two Inches; from thence, to the Back of the next Coulter, is thirteen Inches; thence to the third, thirteen Inches; and from thence to the fourth, the same. From a to b is seven Foot.

This Crookedness of the Beam is to avoid the too great Length of the foremost Coulters, which would be necessary if the Beam was streight; and then, unless they were vastly thick and heavy, they would be apt to bend, and the Point of the fourth would be at so great a Distance from its Coulter-Hole, that it would have the greater Power to loosen the Wedges, whereby the Coulter would rise up out of its Work, as it never doth when the Beam is made in this bending Manner. This Beam is made either of Ash, which is the lightest, or of Oak, which is the most durable. Its Depth and Breadth may vary, according to the heavier or lighter Soil it is to till; but this before us is in Depth five Inches at the first Coulter-Hole, and in Breadth four Inches.

Fig. 4. Is the Sheat Q in *Fig.* 1. (broad seven Inches) with the iron Retch on it, the left Leg of which Retch must stand foremost, to the end that the Edge of its Fore-Part, that is flat, may sit close to the Wood of the Sheat: This Retch holds the Sheat fast up to the Beam by its Nuts and Screws; as also doth a Pin driven into the Hole a, which Hole being a small Part of it within the Beam, the Pin being driven into the Hole, draws up the Sheat very tight to the Beam. The principal Thing to be taken Notice of here, is the Angle b c d, which shews the Elevation of the Sheat; the Line c d is supposed to be equal with the Bottom of the Share, (or rather with the plain Surface whereon it stands;) when this Angle at c is larger than of forty five Degrees, a common *Plow* never goes well: In my *Four-Coulter Plow* I choose to have it of forty two, or forty three at the most.

Fig. 5. Is the Share; a is the End of the Point; b is the Tail of the Share, long from a to b three Foot nine Inches; c the Fin; d the Socket into which the Bottom of the Sheat enters; e a thin Plate of Iron riveted to

to the Tail of the Share: By this Plate, the Tail of the Share is held to the hinder Sheat, as at d; in *Fig.* 1. by a small iron Pin with a Screw at its End, and a Nut screw'd on it on the inner or right Side of that Sheat. From a to f is the Point, long about three Inches and a Half, flat underneath, and round at Top: It should be of hard Steel underneath. From f to c is the Edge of the Fin, which should be well steeled; the Length of it is uncertain, but it should never make a less Angle at f than it appears to make in this *Fig.* The Socket is a Mortise of about a Foot long, at the upper Part; two Inches deep: The Fore-End of this Mortise must not be perpendicular, but oblique, conformable to the Fore-Part of the Sheat which enters it; the upper Edge of which Fore-Part must always bear against the Sheat at e in *Fig.* 4. but if this End of the Socket should not be quite so oblique as the Sheat, it may be help'd, by taking off a little of the Wood at the Point c.

Fig. 6. Shews the Share, with its right Side upwards, in the same Posture as when it plows; whose Side a b should be perfectly streight, but its under Side at c, which is its Neck, should be a little hollow from the Ground, but never more than Half an Inch in any *Plow*, and a Quarter of an Inch in a *Four-Coulter Plow*; so that the Share when it is first made, standing upon its Bottom, bears upon the level Surface only in three Places, *viz.* at the very Point a, at the Tail b, and at the Corner of the Fin d.

Fig. 7. Is the Share, turn'd Bottom upwards; and shews the Concavity of the Fin at a; which must be greatest in a stony rubbly Soil.

Fig. 8. Shews the Share, the right Side upwards, but leaning towards the Left.

In placing of the Share rightly upon the Sheat, consists the well going of a *Plow*, and is the most difficult Part of a *Plow-Wright*'s Trade, and is very difficult to be shewn. Supposing the Axis of the streight Beam, and the left Side of the Share, to be both horizontal, they must never be parallel to each other; for if they were, the Tail of the Share bearing against the Side of the Trench, as much as the Point, would cause the Point to encline to the right Hand, and go out of the Ground into the Furrow; if the Point of the Share should be set, so that its Side should make an Angle on the right Side of the Axis of the Beam, this Inconvenience would be much greater; and if its Point should encline much to the Left, and make too large an Angle on that Side with the Axis of the Beam, the *Plow* would run quite to the left Hand; and if the Holder, to prevent its running out of the Ground, turns the upper Part of his *Plow* towards the left Hand, the Fin of the Share will rise up, and cut the Furrow diagonally, leaving it half unplow'd; beside, the *Plow* will rise up at the Tail, and go all upon the Point of the Share: To avoid these Inconveniencies, the streight Side of the Share must make an Angle on the left Side of the Beam, but so very acute, that the Tail of the Share may only press less against the Side of the Trench than the Point does. This Angle is shewn by the prick'd Lines at the Bottom of *Fig.* 1; where the prick'd Line e f, is supposed to be the Axis of the Beam let down to the Surface, and the prick'd Line g f parallel to the left Side of the Share; but this Angle will vary as those two prick'd Lines are produc'd forwards to the Fore-End of a *long* and a *short* Beam, keeping the same Subtense: For *Plow-Wrights* always take this Subtense at

at the Fore-End of a Beam, whether it be a long Beam or a ſhort one; and 'tis the Subtenſe e g, that determines the Inclination the Point of the Share muſt have toward the left Hand. *Plow-Wrights* differ much in this Matter; but, by what I can learn by thoſe that make the *Plows* I ſee perform the beſt, this Subtenſe at the Fore-End of an Eight-Foot Beam, ſhould never be more than one Inch and a Half; and by full Experience I find, that whether the Beam be long or ſhort, the Subtenſe muſt be the ſame; for when my *Plow-Wrights* take this Subtenſe at eight Foot from the Tail, when they make my *Four-Coulter Plow*, whoſe Beam is ten Foot four Inches long, the Point of the Share will incline too much to the Left, and it will not go well until this Fault be mended, by taking the ſame Subtenſe quite at the End of the Beam; which makes the mentioned Angle more acute.

Fig. 3. Shews the right Hand Side, and upper Side of the *Four-Coulter Plow*, of which V the iron Ground-Wriſt is ſhewn in *Fig.* 9. long two Foot five Inches, deep at the End b four Inches, and three Eighths of an Inch thick, except at the End a, where it is thin enough to bend, ſo as to ſit cloſe to the Share, as at e, in *Fig.* 6. The Ground-Wriſt has four ſmall Holes near its End a, into one of which goes a Nail, to faſten it to the Sheat, thro' the long Hole in the Side of the Socket of the Share, as at a, in *Fig.* 10; and then it will ſtand in the Poſture ſhewn by e f, in *Fig.* 6. From the Outſide of the Ground-Wriſt at f, to the Outſide of the Share at b, is eleven Inches and a Half, which is the Width of the lower Part of the *Plow-Tail* at the Ground; the Ground-Wriſt has ſeveral Holes at the upper Side of its broadeſt End, as at b, in *Fig.* 9. by which it is nailed to the lower Part of the Drock T, as in *Fig.* 3. which Drock with its Perforations is ſhewn in *Fig.* 11.

Fig. 12. Is the Earth-Board, with its Inſide upwards; the Notch a b ſhews the Riſing of the Wood, which takes hold of the Edge of the Sheat, to hold it the firmer, to which it is faſtened by the Holes c and d; and at the other End it is faſtened to the Drock, at the Hole e. All which is ſeen as it ſtands mark'd with W, in *Fig.* 3. But this Pin, with which it is faſtened to the Drock, is bigger in the Middle than at each End; which prevents the Earth-Board from coming near the Drock: By this Pin, the Earth-Board is ſet at a greater or leſs Diſtance from the Drock, as there is Occaſion to throw off the Furrow farther from the *Plow* at ſome Times than at others: It always ſtands conſiderably farther out on the right Hand than the Ground-Wriſt does, which is one Reaſon that the Drock is made crooked, bending outwards in that Part.

The long Handle X is *Fig.* 13, long five Foot four Inches, broad in the wideſt Part four Inches, pinned to the Sheat thro' the Holes a, b, and pinned to the Drock thro' the Hole c.

The ſhort Handle S is *Fig.* 14, and is long three Foot nine Inches, pinned to the hinder Shear (being *Fig.* 15.) by the Hole a, and to the Top of the Fore-Shear above the Beam by the Hole b.

The Handles are made ſo long, for the more eaſy guiding of the *Plow*; but the lazy *Plow-Man* is apt to cut them off ſhorter, cloſe up to the *Plow*, to the end that bearing his whole Weight thereon, he may in a Manner ride inſtead of walking; but if he ſhould thus ride on long Handles, he would tilt up the Fore-End of the Beam, and raiſe the Share out of the Ground.

The

The chief, and moſt indiſpenſably neceſſary Thing to be obſerved, is, to place the four Coulters in ſuch a Manner, that the four imaginary Planes deſcribed by the Edges of the four Coulters, as the *Plow* moves forwards, be all of them parallel to each other, or very nearly ſo; for if any one of them ſhould be much inclin'd to, or recede from either of the other three, they could not enter the Ground together. In order to place them thus, the Coulter-Holes muſt be made thro' the Beam, in the Manner as they are ſhewn in *Fig.* 3. *viz.* the ſecond Coulter-Hole is two Inches and a Half more on the Right than the firſt, the third two and a Half more on the right Hand than the ſecond, and the fourth two Inches and a Half more on the right Hand than the third, conformable to the four Inciſions, or Cuts they are to make in a ten-inch Furrow; and becauſe no ſingle Beam is broad enough to hold the Four Coulter-Holes at this Diſtance, we are forced to add the Piece ſhewn in *Fig.* 16. The ſecond Hole is made part in the Beam, and part in this Piece; the third and fourth are made wholly in this Piece, in which a, b, c, are the Ends of the three Screws, which faſten the Piece to the right Side of the Beam, by their Nuts.

The Diſtance of two Inches and a Half, by which each of the three added Coulters ſtands more to the right Hand than that immediately behind it, muſt be reckon'd from the Middle of one Hole to the Middle of the other.

The Fore-Part of every Hole muſt incline a little towards the Left; ſo that the Backs of the Coulters may not bear againſt the left Side of the Inciſions made by the Edges.

Each Hole being a Mortiſe, is one Inch and a Quarter wide, with its two oppoſite Sides parallel from Top to Bottom; each of theſe Mortiſes, or Holes, are long at Top three Inches and a Half, and at Bottom three Inches; the Back-Part, or Hinder-End, of each Coulter-Hole is not perpendicular, but oblique, and determines the Obliquity of the Standing of the Coulter, which is wedged tight up to it by the Poll-Wedge ~~N~~ in *Fig.* 1, as all Coulters are.

Fig. 17. Is a Coulter; a b is its Length, being two Foot eight Inches, before it is worn; e d is its Edge, ſixteen Inches long; d c is the Length of its Handle, ſixteen Inches; this is made thus long, at firſt, to ſtand above the *Plow*, that it may be driven down lower, according as the Point wears ſhorter; this Handle is one Inch and ſeven Eighths broad, and ſeven Eighths of an Inch thick, equally thro' its whole Length: Its Breadth and Thickneſs might be deſcribed by a rectangled Parallelogram.

In all *Plows* this firſt Coulter is, or ought to be, plac'd in the Beam in Manner following; *viz.* its Back to bear againſt the Back of the Coulter-Hole, its right Side above to bear againſt the upper Edge of the Coulter-Hole, and its left Side to bear againſt the lower Edge of the Coulter-Hole; ſo that always three Wedges at leaſt will be neceſſary to hold the Coulter; the Poll-Wedge before it, as at i, in *Fig.* 1; another Wedge on the left Side of it above, and a third on the right Side underneath: The Coulter-Hole muſt be ſo made, that the Coulter ſtanding thus acroſs the Hole, its Point may incline ſo much towards the Left, as to be about two Inches and a Half farther to the Left than the Point of the Share, if it were driven down as low as it; but it never ought to be ſo low in any *Plow*: As to its Bearing forwards, the Point of the

Coulter

Coulter ſhould never be before the Middle of the Point of the Share: What Angle the Coulter would make with the Bottom of the Share, may be ſeen by the Poſture it ſtands in, in *Fig.* 1. If it ſhould be ſet much more obliquely, it would have a greater Force to raiſe up the Poll-Wedge, and get looſe.

The three added Coulters ſhould ſtand in the ſame Poſture with this already deſcribed, in regard to the Inclination of their Points towards the Left, and this is a very great Advantage to them; for by this Means, when the Fin is rais'd up, by turning the Handles towards the Left, their Points do not riſe out of the Ground on the right Hand, as they would do without this deſcribed Inclination towards the Left; but in regard to their Pointing forwards, I find it beſt, that every one of the Three ſhould be a little more perpendicular than that next behind it. So the Coulter 4 ſtands the neareſt to perpendicular of any of them; by this Means, there being more Room betwixt them above than below, they are the more eaſily freed from the Turf, whenever the Pieces, being covered with a great Quantity of Couch-Graſs, or the like, riſe up betwixt them, which, tho' this ſeldom happens, makes a Neceſſity for a Man or a Boy to go on the Side with a forked Stick, to puſh out the Turf and Graſs, which might otherwiſe fill the Spaces betwixt the Coulters, and riſe up the Plow out of its Work.

'Tis to be obſerved, that none of theſe Coulters ought to deſcend ſo low as the Bottom of the Share, except when you plow very ſhallow: 'Tis always ſufficient that they cut through the Turf, let the Plow go never ſo deep in the Ground.

It is neceſſary alſo, that when you plow very ſhallow, the Fin of the Share be broad enough to cut off the fourth Piece or Furrow; elſe that, lying faſt, will be apt to raiſe up the Ground-Wriſt, and throw out the *Plow*: But when you plow deep, the Ground-Wriſt will break off this fourth Furrow, altho' the Fin be not broad enough to reach it.

Sometimes the firſt, or left Furrow, is apt to come through betwixt the firſt Coulter and the Sheat, and ſo falls on the left-hand Side of the *Plow*: This is no Injury; but yet 'tis prevented, by letting the ſecond Coulter ſtand a little higher than the third, and then the ſecond Furrow, holding the firſt at its Bottom, will cary it over, together with itſelf, on the right Side by the Earth-Board; but yet never ſet this, or any of the three added Coulters, ſo high that they may not cut through the Turf. But as for the firſt Coulter, tho' it ſhould cut but an Inch or two within the Ground, the Share will break off the firſt Furrow in raiſing it up.

Remember, as oft' as the Point of any Coulter is worn too ſhort, that you drive down the Coulter with a large Hammer, carried for that Purpoſe; and when it is driven low enough, faſten the Wedges again, ſo as to keep the Coulters in their right Poſtures, that their Inciſions may be all of them equidiſtant.

Fig. 18. Is a Nut, with two of its oppoſite Corners turn'd up, by which it is driven round by a Hammer, and has ſo great a Force, that three of them with their Screws properly placed, hold the Piece, *Fig.* 16. as faſt to the *Plow-Beam* as if they both were made of one Piece of Wood; but as often as the Wood ſhrinks in dry Weather, the Nuts muſt be ſcrew'd farther on, both here and in all other Places where they are uſed; particularly, thoſe which hold up the Retch; for if the Sheat ſhou'd once get looſe, there is no Cure but by a new one. Betwixt

Betwixt this Nut and the Wood, there ſhould be a thin iron Bolſter, about the Thickneſs of a Shilling, broader than the Nut, to prevent the Nut from eating into the Wood; eſpecially when 'tis to be often ſcrew'd, as on the Retch of theſe *Plows*, and moſt of all on the *Hoe-Plow*; but ſometimes we uſe a Piece of Shoe-Leather inſtead of an iron Bolſter.

Note, there muſt be iron Plates upon all the Coulter-Holes both above and below, three of which are ſeen on the Piece in *Fig.* 16. There's no need to ſay how they muſt be nailed on with many Nails made for the Purpoſe.

Fig. 19. Is the iron Collar, faſtned to the Beam by two ſhort Crooks A, B, which take hold of two ſhort Pins driven into the *Plow* juſt behind the ſecond Coulter-Hole, one on one Side, and the other on the other Side of the Beam. The Crook A is ſeen on the left Side of the Beam near c, in *Fig.* 2. The Crook B doing the ſame on the other Side of the Beam, which is ſeen near a, in *Fig.* 3. C is the Crook (for its Shape called a C) which holds the Tow-Chain to the Collar by the Link D, being Part of the ſaid Chain taking hold of its Fore-Claw; the other Claw taking hold of one of the five Notches of the Collar; this Collar is partly ſeen at d, in *Fig.* 2. Both the Claws of the Crook (or C) turn upwards, ſo that they cannot take hold of any Thing that may riſe under the *Plow*: The Uſe of the Notches is to help the Direction of the Point of the Share, which has been deſcribed by the prick'd Lines under *Fig.* 1. As the Point of the Share wears, it inclines a little more towards the Right, and is remedied by moving the Crook into a Notch nearer to the Left, which will direct the Point a little more towards the Left; this is more eaſy to be done here than in the common *Plow*, whoſe Collar moves round the Beam: We can, by changing the Crook from one Notch to another, incline the Point of the Share towards the Right or Left at Pleaſure. The Length of each Side of this Collar is a Foot ~~long~~.

The Tow-Chain is beſt ſeen in *Fig.* 3. where the Link V is that which paſſes thro' the Box, and is pinned in by the Stake, as has been ſhewn in *Fig.* 1. which Stake is commonly nailed to the Box, to prevent its riſing up. When we would draw up the *Plow* a little nearer to the Crow-Staves, we take hold of the Crook by a ſecond or third Link. Note, that the Shortning of the Chain does alſo a little incline the Point of the Share towards the Left.

Fig. 20. Is the iron Wilds; the Leg A is of one Piece with that which has the Notch; and that paſſes thro' the Leg B by the Loop at a; both which Legs paſs thro' the Box, and are pinned in behind it, by the crooked Pins C, D. This Figure is ſeen with its Crooks on it, both in *Fig.* 1. and *Fig.* 2. Note, that the Holes in the Box thro' which theſe Legs paſs, muſt not be made at right Angles with the Box, but muſt incline upwards, ſo that the Fore-Part of the Wilds may be higher than the Hinder-Part; or elſe the Upper-Part of the Crow-Staves would lean quite back when the *Plow* is drawn. If the Beaſts that draw immediately next to the *Plow* be very high, their Traces muſt be the longer; elſe they and the Wilds, making too ſmall an Angle with the Tow-Chain at the Box, when they draw hard, the Wheels will riſe from the Ground, and be apt to overturn: This Angle I ſuppoſe ſhould not be leſs than of 160 Degrees, and the Angle made by the Tow-Chain or Traces that are drawn by the Cattle that go before them, will make an Angle with the Tow-Chain at the

the Box yet much more obtuse. The Use of these Notches in the Wilds, is to give the *Plow* a broader or narrower Furrow: If the Links are moved to the Notches on the right Hand, it brings the Wheels towards the left Hand, which gives a greater Furrow; and when the Links are moved toward the left Hand, it gives a less Furrow, by bringing the Wheels towards the right Hand.

The Distance betwixt the two Legs of the Wilds is eight Inches and a Half; the Length of the Legs is nineteen Inches. They must be of convenient Strength; the Links being placed in Notches distant from one another, prevents one Wheel from advancing before the other, which would happen if the Links were both in one Notch, or in two adjoyning Notches, except they were middle Notches: These Links are each six Inches and a Half long.

E Is the Ring, by which the two Links, and the two Crooks F and G are held together, and on which they all move.

The Height of the Wheels in *Fig.* 2. The left-hand Wheel is twenty Inches Diameter; the Diameter of the right Wheel is two Foot three Inches; the Distance the Wheels are set from each other at the Ground, is two Foot five Inches and a Half; the Crow-Staves are one Foot eleven Inches high, from the Box to the Gallows; they both stand perpendicular to the Box, and the Distance between the Crow-Staves is ten Inches and a Half. The Pillow is pinned up at its Ends by two small iron Pins, which are chained to it, that if they drop, they may not be lost. These appear in *Fig.* 1. and *Fig.* 2. The Height from the level Surface, up to the Hole in the Box, where the Tow-Chain passes through it, is thirteen Inches, (being two Inches below the Holes of the Wilds, on the Hinder-Side of the Box;) the Height at the other End, where the Crook of the Collar takes hold of the Pin in the Beam at c, in *Fig.* 2, is twenty Inches high above the same level Surface, and shews how much the Chain descends forward, for drawing down the *Plow*, and by which Descent may be known what Angle the Chain would make with the Surface, if it were produced forwards in a streight Line; which is a Thing material for the good Going of a *Plow*; and so is the Angle the Tow-Chain makes with the Beam: About the Middle of this Tow-Chain, there should be a Swivel, whereby one End of the Chain may turn without the other.

When this *Four-Coulter Plow* is made, I would advise that it be tryed with only the first Coulter, before the other three are put in; for if the *Plow* does not go well with one Coulter, 'tis not likely it should go well with four; and I never yet have seen or heard of any that went well with one Coulter, that did not also go well with four, being placed as is here directed.

The Proofs of a *Plow's* Performing well, are these; *viz.* If it makes a Furrow of an equal Depth on the right Hand and on the Left, and turns it off fairly. If, in its Going, the Tail of the Share, and the Bottom of the Drock, bear against the Bottom of the Furrow, and if it goes easy in the Hands of the Holder, without pressing one Arm more than the other, then the *Plow* is certainly a good one.

The Plowman who is accustomed to a *Two-Wheel'd Plow*, never suffers the Wheels to overturn, in Turning out at the Land's End, from one Furrow to another; for which purpose, after he has lifted the *Plow* a

little

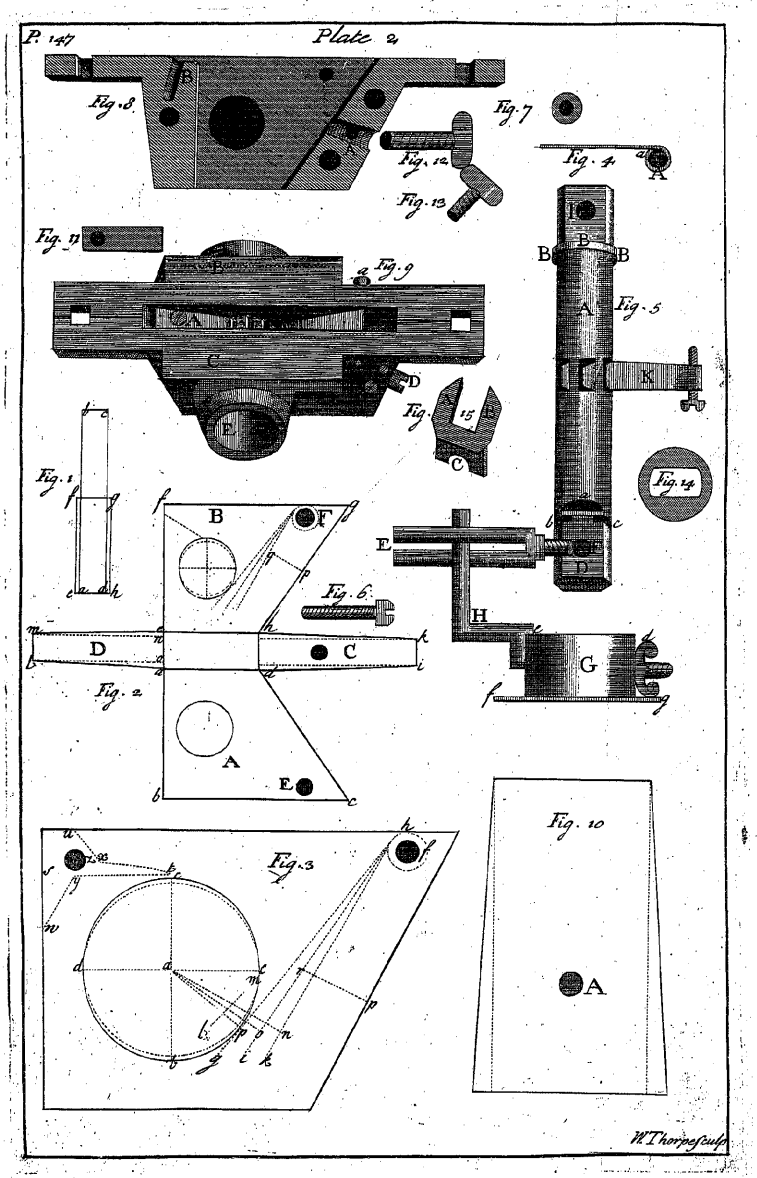

little round, he has
of the Beam, by
Plow lies down on
come near to a Li
up his *Plow*, and g

THE *Drill* is
Rows; it mak
them, at the ſame
The principal Pa
the *Plow*, with its
Of theſe the *Seed*
out the Seed which i
an artificial *Hand*,
more equally than c
It is deſcribed, t
and 3.

As the *Seed-Box*
principal Part of the
The following De
mon *Mortiſe*.
Fig. 1. *Plate* 2. S
Seed-Box, and the M
is a rectangled Para
the *Mortiſe*. e f g
former, is the lowe
the Length of the
the upper Edge of
the lower Edge of
the Line e f, ſhews
ceeds the Top in B
Line c d, and the
which Halves, take
on) deſcribed in *Fig*
the Line f g, whi
the *Mortiſe* exceeds
Fig. 2. Is the *M*
a b c d is a Trapez

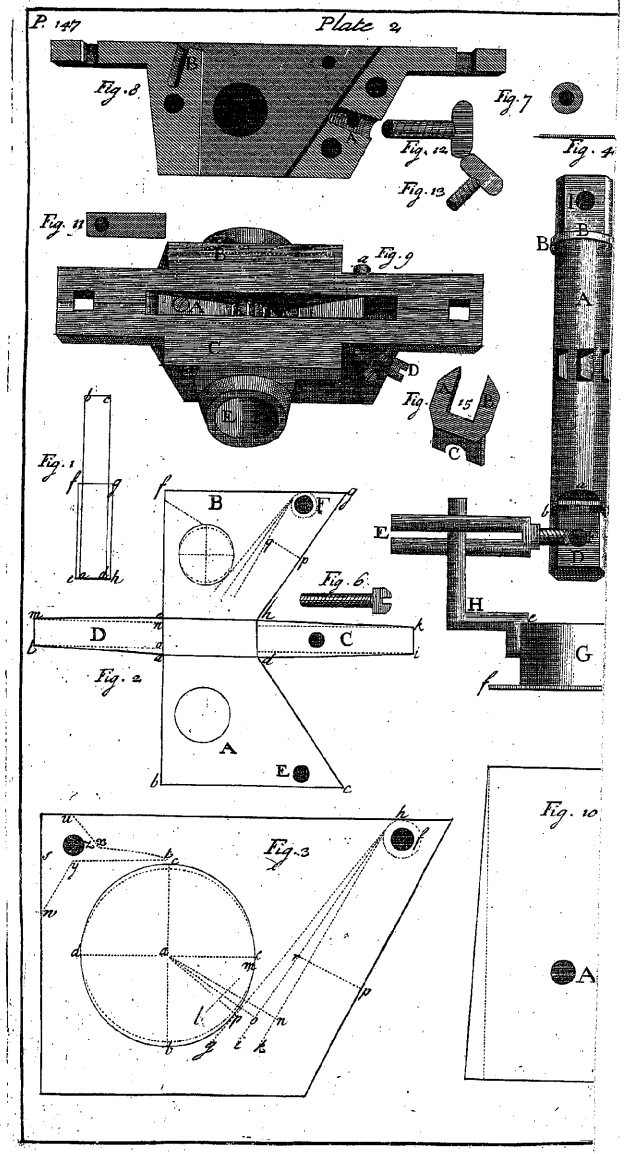

little round, he has a Knack of holding up the Crow-Staves with the End of the Beam, by preſſing his Hand hard againſt the Handle, whilſt the *Plow* lies down on one Side, until the Horſes, the Wheels, and the *Plow* come near to a Line in the Beginning of the Furrow; and then he lifts up his *Plow*, and goes on.

CHAP. XXII.

Of the *Drill-Boxes*.

THE *Drill* is the Engine that plants our Corn and other Seeds in Rows; it makes the Channels, ſows the Seed into them, and covers them, at the ſame Time, with great Exactneſs and Expedition.

The principal Parts of the *Drill* are, the *Seed-Box*, the *Hopper*, and the *Plow*, with its *Harrow*.

Of theſe the *Seed-Box* is the chief; it meaſures (or rather numbers) out the Seed which it receives from the *Hopper*: It is for this Purpoſe as an artificial Hand, which performs the Taſk of delivering out the Seed, more equally than can be done by a natural Hand.

It is deſcribed, together with ſome of its Appurtenances, in *Plates* 2 and 3.

The MORTISE.

As the *Seed-Box* is the principal Part of a *Drill*, ſo is the *Mortiſe* the principal Part of the *Seed-Box*.

The following Deſcriptions ſhew how this *Mortiſe* differs from a common *Mortiſe*.

Fig. 1. *Plate* 2. Shews both the upper and lower Edges of a Turnep *Seed-Box*, and the Manner how they are poſited one over another. a b c d is a rectangled Parallelogram, and ſhews the upper Edges (or Top) of the *Mortiſe*. e f g h, being a Figure of the ſame Denomination with the former, is the lower Edges (or Bottom) of the *Mortiſe*. The Line e h is the Length of the lower Edge of the Hinder-End of the *Mortiſe*. a d is the upper Edge of the Hinder-End of the *Mortiſe*, and poſited juſt over the lower Edge of the ſame End. The Space between the Line a b, and the Line e f, ſhews half the Exceſs whereby the Bottom of the *Mortiſe* exceeds the Top in Breadth; as the Space on the oppoſite Side, betwixt the Line c d, and the Line g h, ſhews the other Half of that Exceſs; both which Halves, taken together, ſhew the whole Bevel (or Angle of Inclination) deſcribed in *Fig.* 2. That Part of the Line a b, from the Angle at b to the Line f g, which interſects it, ſhews the Exceſs whereby the Top of the *Mortiſe* exceeds the Bottom in Length.

Fig. 2. Is the *Mortiſe* cut down by its four Corners, and laid open. a b c d is a Trapezium with two parallel Sides, and mark'd A, the right

Side of the *Mortise*; its opposite Side e f g h, mark'd B, the left Side of the *Mortise*; the Areas of both being true Planes.

d i k h Shew the Fore-End of the *Mortise*, mark'd C. a l m e shew the Hinder-End of the *Mortise*, mark'd D. a d h e shew the Bottom of the *Mortise* already described in *Fig* 1. If these opposite Sides and Ends were all raised up, until the Angle at b join the Angle at l, and that at m join f, and that at g join k, and that at i join c, the Top of the *Mortise* would be formed, and the same with the Parallelogram a b c d, in *Fig.* 1. and the entire *Mortise* of the Turnep *Seed-Box* would appear in its true Form, standing upon its Bottom.

This differs from a common *Mortise*, in that it is impossible to fit it with a Tenon; because it is narrower above, and shorter below, as in *Fig.* 1.

The Areas, or imaginary Planes, of the Top and Bottom of the *Mortise*, are parallel to each other, but not equal.

Its two opposite Sides are equal, but not parallel, by reason of their Inclination to each other upwards, which is the Bevel hereafter to be described.

The two Ends are neither parallel nor equal, because the Hinder-End D is perpendicular to the Top and Bottom, and the Fore-End oblique, and therefore longer.

When two opposite Sides, or Surfaces, are inclined to each other upwards, I call that Inclination a Bevel; but when they are inclined downwards, I call it a Bevel revers'd.

The Line a e, being the Bottom, or Base, of the Hinder-End D, by being longer than the Line l m, shews that the *Mortise* is bevel.

The two prick'd Lines m n and l o, with the Line l m, and Part of the Line a e, make a rectangled Parallelogram, which shews the exact Depth of the *Mortise*, and forms on each Side of it a rectangled Triangle, the one m e n, and the other l o a; which Triangles being similar and equal, and their acute Angles at l and m, being each of four Degrees, make the whole Bevel, or Inclination of the Sides of the *Mortise*, to be of eight Degrees, their Hypothenuses being the same with the Sides of the *Mortise*.

This End D, being raised up to its Place, will be at right Angles with the Plane of the Top and of the Bottom of the *Mortise*, which, being both rectangled Parallelograms, prove that Bevel, or Angle of Inclination, to be the same from one End to the other of the Sides, which Sides are the Hypothenuses of those two Triangles: But this could not be proved by the Triangles in the opposite End C; because the Bases being the same with the other, and having their Legs longer, the vertical Angles at k and i are more acute. The Legs are longer, because the End C, when in its Place, is not at right Angles with the Top and Bottom of the *Mortise*, as the End D is.

The next Thing to be described in the *Mortise*, is the Bore, great Hole, or Perforation; which is best shewn in the Side of a *Mortise* of a *Wheat-Drill*, being larger, as in *Fig.* 3. wherein c e b d is the great Hole, and is a Section of a hollow Cylinder, that passes through the *Mortise*, with its Axis parallel to the Edges of the Ends of the *Mortise*: This Cylinder, being cut by the Side of the *Mortise* obliquely, and not parallel to its Base, is an Ellipse.

The

The prick'd curve Line is a Circle parallel to the Base of the Cylinder, and the curve Line b d c e is the Ellipsis; and this Curve is more or less elliptical (or oval) in Proportion to the Angle of Inclination, or Bevel, of the Sides of the *Mortise*.

Of this Ellipse the longest Diameter (or *Axis transversus*) b c, is at right Angles with the upper and lower Edges of the Sides of the *Mortise*.

Its shortest Diameter (or *Axis rectus*) d e, is the Diameter of the Cylinder, bissecting the *Axis transversus* at right Angles in the Center a; and is in this Figure one Inch and a Half.

This Ellipse being concentrick with the Circle, the Letter a is the Center of both.

The Semi-Ellipsis c e b is the Part of chief Use, and therefore the Edge must of Necessity be smooth and without Flaws, as must the Surfaces of the Sides of the *Mortise* betwixt the Ellipse and the Fore-End.

The Tongue of the *Seed-Box* (*Plate* 3. *Fig.* 1.) differs from that in the Sound-Board of an Organ (from which I took the Idea of it) in Shape, in Situation, and in the Manner of its being fix'd to the *Mortise*.

The Tongue, in the Organ, is on its Surface a long Square, or rect-angled Parallelogram, a little broader and longer than the *Mortise* (or Groove) it shuts against; but this Tongue on its upper Surface, which is here turned downwards, being a Plane, is a Trapezium of the same Shape with the Fore-End of the *Mortise* just now described, except that the Tongue has a less Bevel.

The Situation of that in the Organ is on the Outside of the *Mortise*, which it shuts by its Spring behind it, and opens immediately by the Finger of the Organist pressing down the Key to let in the compressed Air to its Pipes; but this Tongue is situate within the *Mortise* of the *Seed-Box*, and placed almost in a Manner diagonally; for had it been placed like the other, the Seed getting betwixt it and the Edges of the *Mortise*, would not have given Way to its Shutting (as the Air does to the other) but have kept it always open, which would have render'd it useless for sowing of Seeds.

The Manner of fastning the Organ-Tongue to its *Mortise*, is by Parchment and Leather glu'd to its Surface, and also to the Sound-Board, at its End which is opposite to that pressed open by the Key, and shut by the Spring; but this our Tongue is held within the *Mortise*, and moves on an Axis, which passes thro' its upper and narrower End, which Axis is the Pin A (which must be exactly parallel to the Edge of the End of the *Mortise*), and also thro' the Hole f in *Fig.* 3. in *Plate* 2, which is seen in its Place at A in *Fig.* 3. *Plate* 3. and likewise through both Sides of the *Mortise* near their upper Edges, and as near the Fore-End of the *Mortise* as may be, without the Tongue's rubbing against the said Fore-End.

The Breadth of the Tongue must be conformed to the Breadth and Bevel of the *Mortise*, and when 'tis on its Axis, it being raised tight up as far as the short prick'd Line l m in *Fig.* 3. *Plate* 2. being one eighth Part of the great Hole, and being there, you see its upper Edges touch both Sides of the *Mortise* by their whole Length: Then 'tis rightly made; and by this Touching both Sides of the *Mortise* tightly and closely, when raised up to that Degree, it appears, that the two upper Edges of the Sides of the Tongue are inclined to each other in an Angle that is more

more acute, by about one Third, than is the Angle of Inclination of the Sides of the *Mortise*.

Hence, when the Tongue is let down to its Place, there will be on each Side of it an empty Space, betwixt it and the *Mortise*, of the Form of a very acute Triangle, whose vertical Angle is more or less acute, according as the Tongue approaches nearer to, or recedes farther from the Spindle.

This *Fig.* 1. *Plate* 3. is the brass Tongue with its Back-Side upwards. The two outer Lines a b and c d are the Edges of the upper Surface, (tho' turn'd downwards in this Figure) which are inclined to each other, as aforementioned; but the two inner Lines e f and g h are nearer to each other, whereby this under Surface is narrower than the upper: Both must be plain Surfaces, but the upper and its two Edges very free from Flaws, and smooth, or polish'd.

The Reason why the under Surface is narrower than the upper, is to preserve the Bevel of the empty Triangle: For tho' the Bevel of the Sides of the *Mortise* would be sufficient for this, if both Sides of the Tongue were sure to keep equally distant from the Spindle; yet as the Tongue never is so tight on its Axis, but that sometimes one Corner of it may be nearer to the Spindle than the other, in this Case, that Side which is nearest to the Spindle would reverse that Bevel, so as to make the small empty Space that is betwixt the *Mortise* and the Tongue, wider above than underneath.

C C Are the two little Knobs that prevent the Spring from slipping to either Side, and are at the Distance from one another of the Breadth of the Spring.

Fig. 2. Shews one Side, and the Thickness of the Tongue the other Side, being the same. a b shews the polish'd Surface (being a true Plane) whereon the Seed runs down to the Spindle. c d the Back-Side, which lies turn'd uppermost in *Fig.* 1. b e d shews one End of the hollow Cylinder of the Tongue, thro' which its Axis passes.

The Length of the Tongue must be such, as will reach lower than just to touch the Bottom of the great Hole as a Tangent; for if it be not longer than that, it might happen that when the *Mortise* is empty of Seed, and the Tongue set up close, a Wheel might in Turning, or otherwise, go a little backwards, and cause a Notch of the Spindle to take hold of the End of the Tongue, and tear it out of the *Mortise*; therefore let the Tongue reach a little below the Spindle, as the prick'd Line g h, in *Fig.* 3. of *Plate* 2, doth.

As for the Posture in which the Tongue ought to stand in the *Mortise*, it is shewn by the three prick'd Lines in *Fig.* 3. *Plate* 2; where the prick'd Line g h makes an Angle of forty five Degrees, being the nearest that it can stand to the Spindle; the prick'd Line i h makes a somewhat greater Angle, and it is a mean (or middle) Distance from the Spindle; and the prick'd Line k h is supposed to be its greatest Distance, where the Tongue makes its greatest Angle with the Top and Bottom of the *Mortise*. If the Tongue stood so obliquely as to make an Angle much less than forty five, the Tongue would rise too much against the Bevel of the *Mortise*, and the Spring would have the greater Difficulty in returning it to its Place, when driven back by the Force of the Notches.

And

And beside, when the Tongue stood wide from the Spindle, there might be so much Room betwixt it and the Sides of the *Mortise*, that some Seeds might fall thro' there.

The steel Spring is D, properly placed upon the Back of the Tongue, in *Fig.* 1. *Plate* 3.

At first, I made the Spring double, *i. e.* with two Legs, in imitation of that in the Organ, and fastned into its Tongue, much after the same Manner as the Spring of the Organ is into its Tongue or Flap, which prevents the compress'd Air from passing out of the Sound-Board, except whilst the Key is thrust down by the Finger of the Player; but the *Drill-Spring* requiring to be of a vastly greater Strength than that, I made it of Steel, of the Breadth of half an Inch, instead of brass Wire: This performed very well, and several *Drills* are yet extant, that have only this Sort of Springs; yet I found there was great Difficulty to set the Legs at their due Distance from each other; for their Seasoning would alter them from what they were, whilst the Steel was soft: They also took up too much Room in the upper Part of the *Mortise*. Then, to remedy these Inconveniencies, I made it single, with only one Leg, which by full Experience is found to be much better than the double one; it does not contain a fourth Part of the Metal, and is most easily made, requiring none of that Trouble and Nicety that the double Spring doth. I shall therefore give a Description of the single Spring only.

B The End of the Screw, which holds the Spring to the Tongue, thro' a Hole near the upper End of the Spring; D, the Middle, against which the End of the Setting-Screw bears.

Its Length is almost the whole Length of the Tongue, the End E reaching very near to the lower End of the Tongue, and the End B is as near the upper End of the Tongue, as it can be placed without touching the Cylinder of the Tongue.

The Breadth is usually about half an Inch; the Thickness must be in Proportion to its other Dimensions, and according to the Degree of Stiffness required.

The longer it is, the thicker it must be, to have the same Stiffness; but the broader it is, the thinner it must be of the same Length; so that 'tis hard to determine its Thickness. 'Tis made stiffer or stronger by being cut shorter; 'tis made weaker or less stiff by filing or grinding it, either thinner or narrower.

The common Thickness is about that of a Shilling.

The Degrees of Stiffness are measur'd in this Manner; *viz.* Fix two Boards together, leaving a Chink betwixt them, in one Place of an Inch long; lay the Spring (when seasoned) a-cross this Chink, with its Middle exactly over it; then put a String over the Spring, which may pass with both Ends thro' the Chink, and tie so much Weight to the Ends of the String under the Boards, that will pull down the Middle of the Spring, till it touch the Chink, and is streight with both its Ends; this will shew the Degree of Stiffness. But note, that the Spring must be crooked, and bear only upon its Ends, with the hollow Side upwards.

If ten or a dozen Pound Weight pull it down to the Board, 'tis a good Degree of Stiffness, for a large Box: We are not confin'd to be very nice or exact in the Degree of Stiffness; for by our Fingers pressing it, we that are practis'd in it, know well enough, whether a Spring be of a sufficient

Degree

Degree of Stiffness, without weighing it; but for such who are unacquainted with them, 'tis best not to trust to Guess but Weights; and to adjust the Stiffness to that of a Spring, that has been known to perform well.

The Spring must bear against the Back of the Tongue at each End, and lie hollow in the Middle: But the Degree of Hollowness of the Spring is very material; for thereon depends the Distance of the Tongue's Motion towards the Spindle by Force of the Spring, and back again quite to the Setting-Screw, by the Seed that is press'd against it by Force of the Notches, when they are moved by the Wheels; because the more the Spring is curved, the farther will it thrust the Tongue from its Middle, if its Strength be superior to the Force that resists it, as it ought to be when a Notch is passed and before the next: This Motion of the Tongue is call'd its Play.

In order to measure the Distance (or Quantity) of this Motion, we must consider, that the Tongue moving on its Axis above, describes with its lower End the Arch of a Circle, the Chord of which Arch is the Measure required.

To measure this by the Angle the Tongue makes at its Center, would be no Rule for making Boxes; because some Tongues are longer, some shorter, in Proportion to the different Diameters of the Spindles they move against; and yet the Play of the shortest must be as much as that of the longest, that is, it must describe as great an Arch at the Place of Pressure (describ'd in *Fig.* 3. *Plate* 2.) and therefore the shortest Tongue would make the greatest Angle.

A short and easy Way, then, for a Mechanick to measure, is thus: Screw in the Setting-Screw until the Tongue come within a Quarter of an Inch of touching the Spindle; then take out the Spindle, and from the Center of the Hole draw a Line on the Side of the *Mortise*, perpendicular to the Tongue, and at the Tongue's Edge make a Mark with the Compasses, or a Pen; then force back the Tongue against the Setting-Screw as far as it will go, (that is, until the Spring touch the whole Back of the Tongue); produce the said Line to the same Edge of the Tongue, or set the End of the Rule thereon, and draw another Line, by the Rule, from the Mark to the Edge of the Tongue, when farthest back, and there make the second Mark. The Ruler used this Way will shew both the Perpendicular and the Measure.

But yet a quicker Way, is to set the Tongue by the Setting-Screw, up to the Edge of the Hole; and when 'tis forc'd back, measure from the Tongue to the nearest Part of the Hole, which will ever be a perpendicular Line drawn from the Center of the Hole to the Place of Pressure above mentioned, and make another Mark there: Now the Distance between these two Marks, is the Measure (near enough) of the Tongue's Play at the Place of Pressure. Tho' this Line drawn on the Side of the *Mortise* be not exactly perpendicular to the Surface of the Tongue, but only to its Edge, yet the Difference is next to nothing, and not to be regarded.

If its Measure be a Quarter of an Inch, it is what Experience shews to be of a good Size for all Corn and Pease; a little less is no Harm, but greater is the most fatal Error, into which most of the Pretenders to the making of this Machine have fallen; they give the Tongue half an Inch, sometimes three Quarters of an Inch Play. The Mischief of this Error

Error is yet farther increased, if the Spring be weak, if the *Mortise* have a too great Bevel, or if the Angle made by the Tongue at the upper Edge of the *Mortise*, be too acute.

When the Tongue has too great Play, the Seed is apt to be turn'd out too fast, or else too slow, in Spight of the Driller. For when the Tongue is set at its due Distance from the Spindle, and is thrust quite back by the Seed press'd against it by the Turning of the Notches; but the Spring being unable to return the Tongue to its former Place at such a Distance, at the Time of passing the Intervals which are betwixt the Notches; then the Space between the Spindle and the Tongue being too open, the Seed is sent down too fast.

To prevent that, they set up the Tongue to the Spindle, and then, as often as the Spring happens to overcome the Force of the Seed's Pressure, (as sometimes it will) 'tis sent out too slowly.

The Inequality of the Running of the Seed, makes such Boxes useless, which the Expence of Two-Pence (for another Spring, or new Seasoning of that) at most would rectify, if the Maker understood how to mend his own Work. If Time did permit, more should be said on this Point, because I find it is the *Pons Asini* of a Workman; sometimes it may be prevented, when the Spring is too hollow, and gives too much Play. Screw the Screw that holds it on the Tongue, down closer, so that the lower Part of the Screw's Head press against the Spring, and thereby force its Middle nearer to the Tongue, until you find its Play lessen'd to its just Distance.

The Spring remaining in this compressed State, has lost the weakest, and retains only the strongest Part of its elastick Force. Therefore if you find it then too stiff, make it weaker by Filing or Grinding, or else put another into its Place, which is worth honestly no more than Two-Pence.

This Holding-Screw has a pretty broad Head, and is screw'd in by a Notch, like the Screw-Pin of a Gun-Lock.

The Hole in the Spring must be somewhat bigger than the Holding-Screw, because the Spring must have Room to move and play thereon.

If the Middle of the Spring were against the Middle of that Part of the Tongue, that is betwixt its Axis and the Place of Pressure, the Distance of the Spring's Hollowness would be just half the Distance of the Spring's Play, to wit, the one eighth Part of an Inch; but as the Spring does not quite reach up to the Axis, and reaches much below the Place of Pressure, the Hollowness at the Place where the Setting-Screw bears against the Middle of the Spring at D, is considerably nearer to the Place of Pressure than to the Axis of the Tongue; this Hollowness of the Spring at the Setting-Screw may be something more than the one eighth Part of an Inch, to give the Spring a Quarter of an Inch Play; but it seldom has so much.

Fig. 4. in *Plate* 2. shews the Length and Thickness of the steel Spring of a Turnep Seed-Box; this serves both for a Tongue and Spring; it is made first streight, and then the narrowest End of it is turned round, till it reach to a, and forms the Cylinder A, thro' which its Axis passes; but is not welded or joined to the other Part of the Spring at a; it is placed in the Box with the Cylinder Part underneath; the Face of this Spring is seen upon its Axis, mark'd K, in *Fig.* 5. its Axis is to

to paſs thro' the Hole E, and ſcrew into the Hole F, in *Fig.* 2. as is ſeen more plainly at a in *Fig.* 9.

As the Top of every Tongue ought to be even with the upper Edges of the *Mortiſe*, the Thickneſs of the Cylinder of the braſs Tongue cauſes the Hole in the Sides of the *Mortiſe*, into which it is held by its Axis, to be far enough from the Edges of the *Mortiſe*, to be bored and ſcrew'd without Danger of breaking the ſaid Edges; but the Spring of the Turnep-Drill being ſo very thin, there is ſome Difficulty in making the Hole, ſo high and near the Edges; to prevent which Danger, *Fig.* 7. ſhews the End of a ſmall hollow Cylinder of Iron or Braſs, of the Thickneſs of the *Mortiſe*; which being put into the Cylinder A, in *Fig.* 4. raiſes the Spring higher above the Hole; ſo that it may be made as low in a Turnep *Mortiſe*, as that is which holds the braſs Tongue in the Wheat-Drill: but we do not always uſe this inner Cylinder; but muſt then take the more Care in boring the Hole, or elſe it will burſt out at the Edges of the *Mortiſe*.

Its Shape muſt conform to that of the braſs Tongue already deſcribed.

The Degree of itsS tiffneſs is known by weighing, as has been directed for the other Spring; and being laid with its Face downwards over a Chink, with a ſmall Piece of Wood of the Thickneſs of a Barley Corn at each End, and a String taking hold of its Middle, and deſcending thro' the Chink, the Weight of five Pound tied to the End of the String, will juſt bend the Spring, till it touch the Edges of the Chink; and this is the Stiffneſs of a Spring that has performed well, for many Years in drilling of Turnep-Seed.

The SETTING-SCREW.

Fig. 6. Is the iron *Setting-Screw*, which paſſes thro' the Hole in the Fore-End of the *Mortiſe*, *Fig.* 2. and paſſes up to the Middle of the Spring by the prick'd Line p q in the ſame Figure. The Uſe of this *Setting-Screw* is, to increaſe or diminiſh the Proportion of Seed to be turned out by the Notches; and this it does by forcing up the Spring and Tongue (where there is one) nearer to, or farther from the Spindle, whereby the Seed-Paſſage is made wider or narrower, as is ſhewn by the three prick'd Lines in *Fig.* 2. and *Fig.* 3.

Obſerve, that the prick'd Line p q, *Fig.* 2. (being the *Mortiſe* of the Turnep-Box) ſtands higher than the ſame Line doth in *Fig.* 3. which is the *Mortiſe* of the Wheat-Box. The Reaſon of this Difference is, becauſe the Spring in the Wheat-Box bears at its lower End againſt the Tongue below the Seed-Paſſage, and at its upper End below the Axis of the Tongue, whereby the Middle of that Spring is lower than the Spring of the Turnep-Box, which being both Spring and Tongue, bears againſt its Axis above, and againſt the Seed-Paſſage below; therefore its Middle is higher. This *Setting-Screw* ſhould be placed perpendicular to the Tongue when at its mean or middle Diſtance from the Spindle, which may be ſuppoſed to be the middlemoſt of the three mention'd prick'd Lines. This *Setting-Screw* ought to be ſmooth and round at its End which bears againſt the Spring; for if it ſhould have ſharp Corners or Edges, the Spring might be wounded by them, and in Time might break there, being

being preſs'd by every Notch that turns againſt it; and, as I have computed it, a Spring undergoes one hundred thouſand of theſe Preſſures in one Day's Work, and yet, in my whole Practice, I have had only one Spring broke, and that was in drilling a large Sort of Peaſe with a Wheat-Drill, and was occaſioned by a jagged End of the *Setting-Screw*, which was not placed perpendicular to the Spring, by which means the rough End of the Screw made Scratches againſt it a Quarter of an Inch long, and ſo deep that the Spring broke off there: Let not this *Setting-Screw* be any longer than juſt to force the Tongue up to the Spindle; for if it ſhould be longer, an ignorant Driller might happen, by the Force of the Screw, to break the Tongue, or its Axis; but in the Turnep-Drill, which has only a Spring inſtead of a Tongue, the *Setting-Screw* may be a Thread or two longer; becauſe the Spring will yield a little to it, after it touches the Spindle, and is ſometimes of Uſe in that Reſpect, when the Notches are too large. This Screw muſt be of ſuch a Bigneſs, that it may not be in Danger of Bending; for if it ſhould be bent, it could not be ſcrew'd up with any Certainty, becauſe its End being crooked would be below its Place at one Half-Turn, and above it at the other Half-Turn; and ſo the Spring might be ſet farther from the Spindle inſtead of nearer, and nearer inſtead of farther, by the Crookedneſs of the *Setting-Screw*. Its Head may be made with a Notch in it, to be ſcrew'd in with a Knife, or elſe with a Head like a T, to be turn'd with the Fingers, which I think is beſt, eſpecially for a Wheat-Drill; becauſe as the Brine and Lime which ſtick on the Wheat grow drier, it will run faſter; and therefore the *Setting-Screw* muſt be frequently ſcrew'd in to leſſen the *Seed-Paſſage*.

The *Seed-Paſſage*, or Place of Preſſure, is where the Seed paſſes down betwixt the Spindle and the Tongue; and is in that Part where they are neareſt together, for there the Seed is preſs'd hardeſt by the Force of the Notches which carry it down: And this Paſſage is higher or lower, as the Tongue ſtands nearer or farther from the Spindle; for as it ſtands wider, it becomes nearer to perpendicular to the Top of the *Mortiſe*, and then the *Seed-Paſſage* is higher; and when it ſtands neareſt to the Spindle, then the *Seed-Paſſage* is loweſt. This appears in *Fig.* 3. by the three prick'd Lines a n, a o, and a p.

The Spindle, with its Notches, is beſt ſhewn where it is large, and made of Wood, as that of the Wheat *Seed-Box*; 'tis a ſolid Cylinder that paſſes thro', and fills the great Hole, or hollow Cylinder of the *Seed-Box*; 'tis of various Lengths, according to the Diſtance its Wheels go aſunder; it is always in large Boxes the Axis of two Wheels, and turns round with them, as the Axis of the One Wheel of a Wheel-Barrow does with that: Theſe Wheels by their Circumferences meaſure out the Ground over which they carry the *Seed-Box*, and by the Notches in their Axis, deliver down the Seed equally, whether they move ſwift or ſlow; becauſe an equal Number of Notchfuls of Seed will be delivered thro' the *Seed-Paſſage* at each Revolution of the Wheels.

The Notches reſemble thoſe in the Hinder-Cylinder of a Cyder-Mill; which break the Apples by turning againſt the Notches of the Fore-Cylinder, as our Notches turn againſt the Tongue, bruiſe the Apples which come betwixt them. As our Notches might ſometimes bruiſe ſoft Seeds, if the Tongue ſtood cloſe to the Notches, without any Spring be-

hind

hind it to give Way to their Preſſure, and return the Tongue again to its Place, at every Interval betwixt Notch and Notch.

The beſt Way, that I can think of, to ſhew the making of theſe Notches, is by a Section of the Spindle at right Angles, in the Middle of the Notches, as in *Fig.* 4. of *Plate* 3. which is a Circle whoſe Circumference is cut off by ſix Notches; which ſhew the Different Sort of Notches, that increaſe or diminiſh the Proportion of Seed to be carried thro' the *Seed-Paſſage* by them: The Length of the Notches we never alter; but make them always parallel to the Axis of the Spindle, and of the Length of the Diſtance there is between the lower Ends of the oppoſite *Axes tranſverſi* of the Ellipſes, or great Holes of the *Mortiſe*; for if any Part of the Surface of the Spindle ſhould be betwixt the End of a Notch and the Hole, one or more Seeds coming betwixt that Surface and the Tongue, might hold it open, and prevent its preſſing againſt the Notch, to hold the Seed therein from falling without the Turning of the Wheels.

This Proportion of Seed is alter'd by the Number of Notches, and by their Depth, or Breadth, or by both. b c is the Depth of a Notch, which we call its Side, and is that which takes hold of the Seed, and carries it down thro' the *Seed-Paſſage*. The Manner of cutting this is ſeen by its being a Portion of the *Radius* A c. The Bottom of a Notch is made in different Forms: As, firſt, it may be convex; as is ſhewn by the curve Line b d. We may enlarge the Capacity of this Notch, by taking off the Convexity of its Bottom; as in the Bottom of the Notch ſhewn by the Line e f; and if we would increaſe it more, we make it concave; as g h.

But of whatever Sort, or Dimenſions one Notch is made, all the reſt ſhould be the ſame exactly; and conſequently, the Interſtices (or Intervals) of which the Line f c, being an Arch of the Circle, is the Breadth of, one of the Interſtices (or Intervals) between Notch and Notch muſt be equal, and cannot be otherwiſe, if the Notches are all equal, as they appear in the adjoining *Fig.* 5. which is a Section like the former, and ſhews ſix Intervals, with their ſix Notches, of the Size wherewith we drill *Centfoine* with high Wheels; but when we would drill very thin, 'tis better to have but four or five Notches inſtead of ſix.

Fig. 6. Shews a Notch of the Spindle. a b is the upper Edge of the Side of the Notch, being always an acute ſolid Angle. c d is the Edge of its Bottom, being always an obtuſe Angle. e f is the Angle made by the Side and Bottom, and is always ſhorter than the aforeſaid two Edges, by reaſon of the Obliquity of the two Ends; this Angle is never obtuſe, except when the Bottom of the Notch is concave. Theſe three Lines muſt be parallel to the Axis of the Spindle.

Fig. 7. Is one End of the afore-deſcribed Notch; the Line a b being joined to the Line f d of *Fig.* 6. and the Line a c being join'd to the Line b f in *Fig.* 6. would be the End of that Notch in its proper Poſture; and then the Line b c being an Arch of the cylindrical Spindle, would be the Edge of the Upper-End of the Notch. a b c being the Area of this End, is a Plane, and, when in its Place, makes an Angle of forty five Degrees with the Axis of the Spindle. The other End is the ſame with this in all Reſpects, except that it being oppoſite to it, it is inclined to it in an Angle of ninety Degrees, at the bottom Angle of the Notch, at the Line e f in *Fig.* 6.

Fig.

Fig. 8. Is a Notch lying with its Ends near it, and is of the ſame Dimenſions with thoſe appearing in the *Seed-Box*, *Fig.* 3.

The *Cover* B appears with its upper Surface rightly placed in the *Mortiſe*, in *Fig.* 3. of *Plate* 3. where its Breadth is ſhewn to be the ſame with that of the *Mortiſe*; but its Shape and other Dimenſions, are beſt ſeen in *Fig.* 3. of *Plate* 2. where ſ t is its Length, and reaches from the Hinder-End of the *Mortiſe*, to within the Tenth of an Inch of the Upper-End of the *Axis tranſverſus* of the Ellipſis; its greateſt Depth is from v to w, and is made ſo deep, that its Bottom, at w, bearing againſt the End of the *Mortiſe*, may prevent its Point, which is at t, from ſinking down to touch the Spindle, which it neither muſt do, nor be ſo high above it as to ſuffer a Seed to paſs between the Spindle and it; tho' the Seed is not apt to paſs that Way, becauſe the Notches throw it forwards from the *Cover*. z is the Hole, thro' which an iron Screw-Pin paſſes, and ſcrews into the oppoſite Sides of the *Mortiſe*, to hold it firm in its Place: 'Tis made ſo thin betwixt x and y, both for Lightneſs, and that the Seed may come the more freely to the Notches, without Danger of Arching at that End. The Uſe of the *Cover* is to prevent any Seed from falling down behind the Spindle.

Fig. 10. *Plate* 2. is the Fore-End of a Wheat *Mortiſe*, with its Hole A, thro' which the *Setting-Screw* is ſcrew'd, and paſſes up to the Back of the Tongue by the Line q r in *Fig.* 3.

Fig. 9. in *Plate* 3. is the Hinder-End of a Wheat *Mortiſe*, which by its prick'd Lines, and the two right-angled Triangles they make, ſhews the Bevel of the *Mortiſe*, and alſo its Depth; it alſo ſhews the Difference of the Bevel of the *Mortiſe*, and that of the Tongue, *Fig.* 1. which is placed againſt it: theſe Figures, having been already demonſtrated in the Deſcription of the Turnep *Mortiſe*, and in theſe, I need ſay no more of it, but that I think theſe laſt mention'd Figures, ſufficient Directions for underſtanding, and making the *Mortiſe* of a Wheat-Drill.

Fig. 3. of *Plate* 3. exhibits to View a Wheat *Seed-Box*, with its Appurtenances, ſtanding upon its Bottom; B the braſs Cover; C the Tongue hanging upon its Axis; ~~A~~ c the End of the iron Screw that holds on the Spring, coming thro' the Tongue, and filed ſmooth with it; a, a, a are three Notches of the Spindle, with their bevel Ends; b, b are two Interſtices betwixt the Notches.

Hitherto, we have been ſpeaking of the Parts *contained* in the Wheat *Seed-Box*; let us now come to the Parts *containing*: As, firſt, d e f g is the upper Surface of the braſs *Seed-Box*, ſhewing the Top of the *Mortiſe*, and what it contains; h h h, and h h h ſhew the Ends of the hollow Cylinder, and its Baſes coming out on each Side, farther than the Box; for if it did not project farther out than the Sides of the Box, the Surface of it would be ſo narrow, that it would cut the wooden Spindle by the Friction made between it and the Spindle; but the Surface, being of this Breadth, never wears into the Spindle, but makes it ſmooth and ſhining; i i i, and i i i ſhew a Portion of the wooden Spindle (of an Inch and a Half diameter) coming out of the hollow Cylinder, on each Side of the braſs Box.

The Spindle is kept from moving end-ways, by Wreaths, in the ſame Manner as the Axis of a Wheel-Barrow is; which Wreaths ſhall be deſcribed together with the *Hopper*. k is the Hole by which the Fore-End of

of the *Seed-Box* is held up to the Bottom of the *Hopper*, by a Screw and Nut. l is the Hole where the Hinder-End of the Box is held up, in the ſame Manner as the Fore-End is. m n o p ſhew where the two Halves of the *Seed-Box* are join'd together.

Fig. 10. Shews the Outſide of one Half of the braſs *Seed-Box*. A A A ſhew the Thickneſs of the projecting Baſe of the hollow Cylinder, which is made the thicker, to the end that the Hole may be bored larger, and made an Inch and three Quarters diameter, when a Spindle that is to go therein is required to be of that Bigneſs, by reaſon of its extraordinary Length, as it is in the *Fore-Hopper* of the Wheat-Drill. B C ſhew the Thickneſs of the Ends of the *Seed-Box*, whereby it is held up to the Bottom of the *Hopper*; if they are not quite a Quarter of an Inch thick, they will be ſtrong enough; eſpecially C, which is the hindermoſt, and which is never pull'd down by the Turning of the Spindle, but is rather raiſed up by it.

D Is the Head of the Counter-Screw, to be turn'd by the Fingers, to preſs againſt the Side of the *Setting-Screw*, to keep it from turning of itſelf, when it is worn looſe.

E Is the Hole for the Axis of the Tongue. F is the Hole of an iron Screw-Pin, which both holds the Cover to its Place, and alſo the two Halves of the Box together. G is another Screw-Pin, which holds the two Sides of the Box together. H and I are Holes for two other Screw-Pins, which likewiſe hold the two Halves of the Box together, and are placed one above, and the other below the *Setting-Screw*; for otherwiſe that Screw, and its Counter-Screw, might force open the Joining of the Box, and then the *Setting-Screw* might be looſe, and the Bevel of the Box might be altered; but theſe Screws being one on each Side of it prevent this Inconvenience.

Fig. 8. in *Plate* 2, is one Half of a braſs Turnep *Seed-Box*, lying with its Inſide uppermoſt, which ſhews the left Side of the *Mortiſe*, and half the Fore-End, and half the Hinder-End of the *Mortiſe*, and half of each *Screw-Pin* Hole, by which it is held up to the Bottom of the *Hopper*. A is half the Hole of the *Setting-Screw*, ſhewing in the Middle of it the End of the Counter-Screw. B is half the Hole, by which the ſteel Spring-Cover is held in with a Screw; all the other Holes are for the ſame Purpoſes, as have been ſhewn in the Wheat *Seed-Box*.

Fig. 9. Is the whole Turnep *Seed-Box*, ſtanding upon its Bottom; Part of its ſteel Spring-Tongue appears in its Place, as alſo ſome of the Notches of the Spindle; but more eſpecially the Cover A, which differs from the Cover of the Wheat *Mortiſe*, this being a very thin Spring, whoſe Lower-End juſt reaches to touch (but not bear upon) the Spindle at the Upper-End of the tranſverſe *Axes* of the Ellipſes. The *Mortiſe* being filed away at the End, in order that the Upper-End of this Spring, and the Screw which holds it, may not lie above the upper Surface of the Box. This Spring is made very weak, to the end that if by any Chance a ſoft Seed ſhould ſtick in a Notch, and be turn'd round, this Spring might ſuffer it to paſs by without breaking it. B, C are the two Flanks or Sides, made neceſſarily of this Breadth, for bearing againſt the Wood of the Bottom of the *Hopper*, to prevent the Seed from falling out betwixt the Wood and the Braſs, and that the Hole in the *Hopper* may be broader than this narrow *Mortiſe* of the *Seed-Box*. The left Flank

Flanch B, being next the wide Side of the *Hopper*, lies all open, except on the Outſide of the prick'd Lines, where it is covered by the Wood of the End of the *Hopper*, when it is ſcrew'd on to its Place; but the Flanch C, on the right Side, will be all covered by the End of the Box, that will ſtand upon it, and will reach to the prick'd Line that touches the Edge of the *Mortiſe*. D is the End of the *Setting-Screw*, appearing in its Place with a Notch, whereby it is to be turned by a Knife; but I think it better to have an End like a T, to be turned with the Fingers. E is one End of the hollow Cylinder, which projects beyond the Flanch, that there may be more Room ~~in~~ for the Crank to turn (without ſtriking againſt the End of the *Hopper*, or againſt the Flanch) on the Outſide of the Box or *Hopper*, and for that the longer this Cylinder is, the better the braſs Spindle will turn in it.

Fig. 11. Is the *Spring-Cover*, with its Hole, whereby it is ſcrew'd into its Place, as it is ſeen mark'd A, in *Fig.* 9.

Fig. 12. Is the *Setting-Screw* pointing againſt its Hole, its Head being flat, that it may be turned by the Finger and Thumb.

Fig. 13. Is the *Counter-Screw*, to be turned in the ſame Manner.

Fig. 5. Shews the braſs Spindle of the Turnep *Seed-Box*, and the Manner of Turning it againſt its Steel Tongue, or Spring; which Manner is different from that of Turning the larger Spindles for Boxes of a larger Size, ſuch as the Wheat *Seed-Box*.

This Spindle, being but half an Inch Diameter, is too ſmall to be turned by the two Wheels, as the larger Spindles are; not only becauſe it would be in Danger of breaking by the Weight of the *Hopper*, and by the Twiſting (or Renching) of the Wheels; but alſo becauſe it would ſoon become looſe, by wearing the hollow Cylinder thro' which it paſſes; and it would be apt to open the braſs Flanches from the Bottom of the *Hopper*, whereby the Seed might run out, beſide ſeveral other Inconveniencies, all which are prevented by turning the Spindle in the Manner ſhewn in this Figure; for here the Spindle never preſſes againſt the hollow Cylinder, with any greater Force than that of its own Weight, which is ſo very little, that the Friction made by it is next to nothing.

A the Spindle, exactly fitting the Bore of the hollow Cylinder; which when it enters the ſaid Cylinder at its left End, in *Fig.* 9. will be ſtop'd by the Wreath B B B; which Wreath being circular is caſt on the Spindle, and is Part of it; the other End of the Spindle will then appear without the right-hand End of the ſaid hollow Cylinder, at E in *Fig.* 9. and is kept there by the Wreath *Fig.* 14. which is to be put on upon the End of the Spindle, until it come to the Shoulder at a, which Shoulder is exactly even with the End of the hollow Cylinder; ſo that this Wreath will touch the End of the ſaid Cylinder by its whole Surface. Then, to fix in this Wreath from coming off, we make uſe of the Slider, *Fig.* 15. whoſe two Claws A, B, being thruſt down by the two Notches of the Spindle, at b and c, until its other Part C, which is perpendicular to its Claws, comes down to the Flat of the Spindle, and invirons one Half of the Hole, covering the Part of the Flat which appears of a darker Colour; and then the upper Part of C, in *Fig.* 15, makes one level Surface with the Flat D of the Spindle; and then the iron Fork E, being ſcrew'd into the Hole F, holds down the Slider faſt, ſo that it cannot riſe up; and then the Spindle, being in its Place, will run round without moving end-ways, being confin'd by theſe Wreaths.

The

The Spindle being thus placed, ſo that it may turn eaſily, we place the *Seed-Box* upon its Flanches with its Bottom upwards; and then ſetting one ſharp Point of a Pair of Compaſſes, or ſome ſuch Inſtrument, upon the Spindle, within the *Mortiſe*, cloſe to the Edge of the Hole or Ellipſe at the End of the tranſverſe Ax, turn round the Spindle until the ſaid Point makes a Mark round the Spindle, which will be a Circle; by the ſame Means make ſuch another Mark at the oppoſite Ax; then unſcrew the Fork, and take out the Slider, pull off the Wreath, and take out the Spindle, and cut the Notches between the two ſaid Circles and Marks; the Edges of the Ends of the Notches muſt be Arches of theſe Circles. Theſe Notches ſhould differ from thoſe already deſcribed in the Wheat-Drill, in nothing but the Smallneſs of their Dimenſions; their Depth ſhould be about the Thickneſs of a Turnep Seed, or ſomething deeper. The Breadth of their Bottoms is uncertain, and muſt be greater or leſs according to their greater or leſs Number; but we commonly have ſeven or eight Notches, and make them about the Breadth in which they appear in this Figure; but whatever their Number be, they muſt be all equal, and ſo muſt all their Interſtices.

G is the End of a wooden Spindle, thro' which paſſes the iron Crank H, and is faſtned to it by its Screw and Nut, at d; Part of which Crank enters the Wood at e, which prevents its Turning in the Spindle.

This Crank, by its other End, paſſing thro' the two Legs of the Fork E, and equally diſtant from the Top and Bottom of it, turns the Spindle by the Motion of the Wheel which is fix'd on the other End of the wooden Spindle. If this Crank were to turn the Spindle by a ſingle Pin, inſtead of this Fork, the Seed could never be delivered out equally to the Ground; for as ſoon as the Pin began to deſcend, and decline from being perpendicular to the Horizon, it would by its own Weight falling down, turn the Spindle half round in a Moment, and there remain with its other End downwards perpendicular to the Horizon under the Spindle, until the Crank reach'd it there, and ſo no Seed would be turn'd out by one Semi-Circle of the Wheel, and a double Proportion would be turn'd out to the Land that was meaſur'd by the other Semi-Circle; but the hinder Leg of the Fork, bearing againſt the hinder Part of the Crank, prevents this Inconvenience.

The Line f g is Part of the Surface of a Board, thro' which the wooden Spindle paſſes, and by which it is held in its Place; as ſhall be ſhewn hereafter.

The Axis of this wooden Spindle ought to fall into a Line with the Axis of the braſs Spindle; but, unleſs Care be taken to prevent it, the wooden Spindle will ſo much wear the Hole thro' which it paſſes, and be worn by it, as to have Room in the Hole to deviate from this Exactneſs, and may deſcend ſo low, that the Crank may come out of the Ends of the Fork; and for this Reaſon it is, that the Fork is made ſo long as it is; but when this wooden Spindle does, by the Contrivances hereafter ſhewn, keep its Axis in a Line with the Axis of the braſs Spindle, or very nearly ſo, then the Legs of the Fork need be no longer than half an Inch; and in that Caſe, the Joint of the Crank which is perpendicular to the Spindle, muſt be ſhorter, or elſe deſcend deeper into the Wood, ſo that its End which turns the Fork, may be in the Middle betwixt its Bottom and the End of its Legs.

The

The Uſe of the other End of the Spindle is this; when we have a Mind that it ſhould be turned by the left Wheel inſtead of the right, we ſcrew in the Fork into the Hole I, and place a ſhort Screw in the room of the Fork, to hold down the Slider.

Note, It is not abſolutely neceſſary, that the hollow Cylinder, which appears on the Sides of the *Seed-Box*, ſhould both, or either of them, project farther than the Flanches; but I think it better that it ſhould do ſo (at leaſt) on that Side which is next to the Fork.

This Cylinder ſhould be bored as true, and as even as the Barrel of a Fuſil is bored; and the Edges and Surfaces of its Ends muſt be ſmooth, and without Jaggs, to the end that the Wreaths may turn glibly againſt them.

The Figure or Shape of all Sorts of Seeds diſpoſes them, more or leſs, to form an Arch, when they are preſſed from above, and confin'd on all Sides.

The moſt effectual Way to prevent this, is to take Care, whenever many Seeds are to deſcend together by their own Gravity thro' a narrow Paſſage, that ſuch Paſſage be never narrower downwards than upwards; but, on the contrary, that it be wider downwards, on ſome or one of its Sides; in which Caſe, if the Surfaces of all the Sides of this Paſſage be ſmooth, 'tis impoſſible that Seeds ſhould of themſelves form an Arch therein.

On this Maxim depends the infallible Performance of a *Drill*, and from hence are derived the Uſes of the Bevel of the *Mortiſe*: What I mean by the Word *Bevel*, in general, has been already defin'd.

The Bevel of the *Mortiſe* of the *Seed-Box*, is that Inclination of its Sides, whereby it is wider downwards, and narrower upwards, by which Means the Seed is prevented from arching in the *Mortiſe* before it deſcends to the Notches of the Spindle. And this is the firſt Uſe of our Bevel; for this Arching might happen in the *Mortiſe*, if the Planes of its Sides were parallel to each other, and would be unavoidable, if their Inclination were downwards, as it is upwards; but theſe Planes opening downwards, the lower the Seed deſcends, the more Room it has to expand; ſo that the very Weight, which would otherwiſe cauſe it to arch and ſtop, does by Means of this Bevel force it to deſcend to the Notches, and then 'tis ſafe from all Manner of Danger of ſtopping. The Ends of the *Mortiſe* are at ſuch a great Diſtance from each other, and the Cover ſo very thin as to lie almoſt even with the upper Part of the Spindle, that the Seed can never form an Arch that Way, or if it did, the continual Motion of the Tongue would immediately break it down at the Fore-End of the *Mortiſe*.

The ſecond Uſe of this Bevel is, that it gives Room for the Tongue to be in the ſame Manner bevel, tho' in a leſs Degree: By this Means, the Seed cannot by any Impediment be ſtop'd in its oblique Deſcent to the Notches, from the Fore-End, and all that other Length of the *Mortiſe*, along, and upon the Surface of the Tongue.

But if the *Mortiſe* had not this Bevel, the Tongue could not have it; for then, either the upper Surface of the Tongue muſt have no Bevel at all, (which would deſtroy the two empty Triangles which ought to be on its Sides, or elſe it muſt have a Bevel the contrary Way (*i. e.* a Bevel revers'd) and be narrower downwards than upwards, which would cauſe the

the Seed to arch thereon, and hinder its free Descent to the Notches.

A third great Use of this Bevel is, that besides the Bevel of the Tongue aforementioned, it gives Place for two empty Triangles, one on each Side the Tongue, which have each its vertical Angle extremely acute at the Axis of the Tongue, and have their Bases at the Bottom of the *Mortise* and of the Tongue: These Triangles are also Bevels, which consist of the Difference (or Complement) of the Bevel of the Tongue and that of the *Mortise*. The latter being about one Third greater than the former, *i. e.* one Third of the whole Bevel of the *Mortise* is divided between these two Triangles, to each a sixth Part; so that if the Angle of Inclination of the Sides of the *Mortise* were nine Degrees, then the vertical Angle of these empty Triangles would be of one Degree and thirty Minutes, and ~~seven Degrees and thirty Minutes~~ would be left for the Bevel of the Tongue. And these triangular Spaces help to secure the free Motion of the Tongue, and free Descent of the Seed down its Surface; because they permit no Impediment to lodge in them, they being, by means of the Bevel of the *Mortise*, wider downwards, both obliquely and perpendicularly, so that no Dust, nor whatever else happens to get in betwixt the Tongue and the Side of the *Mortise*, can rest there; for it will be immediately removed thence by the Motion of the Tongue, and its own Gravity, and either thrown perpendicularly down, or else obliquely to the Notches, and the first Notch that takes it will carry it out at the *Seed-Passage*.

The fourth Use of the Bevel is, that thereby the Sections of the hollow Cylinder (before described) do form Ellipses instead of Circles; which they must have been, if cut parallel to the Bases of that Cylinder, and the Sections must have been thus parallel, had the *Mortise* been without any Bevel.

Now the two Semi-Ellipses, which are on the Fore-Sides of their longest Axes or Diameters, and next to the Tongue, are opposite to, and do still uniformly depart from each other, even from the Upper-End of their said longest Axis, until they arrive at the Lower-End of the same Axis, which is below the *Seed-Passage*, as its Upper-End is very near the Cover.

This Opening of these opposite Semi-Ellipses, makes it impossible for any Thing of itself, to get into the remaining Parts of this hollow Cylinder, betwixt them and the solid Cylinder, call'd the Spindle, which turns continually therein, when the Wheels are going; for you will see, that if you make a Mark on the Spindle, close to the Side of the *Mortise*, at the Upper-End of the longest Ax of the Ellipse; and then turn the Spindle until this Mark come against the Lower-End of the same Ax, and there make another Mark on the Spindle, close to the Side of the *Mortise*, and draw a Line from one Mark to the other, parallel to the Ax of the Spindle, which will be the Measure of that Part of the Bevel of the Diameter of the Hole; every Point in this Line will, by an entire Revolution of the Spindle, generate a Circle, which will cut the Ellipse in two Places, once on the Fore-Side of its longest Axis, and once on the Back-Side or hinder Half of it; and that all these Points, in this Surface of the Spindle, describ'd by these Circles, will enter the Hole, by the said hinder Semi-Ellipse, as the Spindle there turns upwards (as it always does), and they will all again come out on the fore Semi-Ellipse, as they descend towards the Lower-End of the said Ax of the Ellipse. As

As these Points thus come out of the Hole, or (if I may use the Expression) as they emerge, they oppose every Thing that would enter the Hole, they still moving from the Hole, and push away from it whatever they meet; nay, if any Thing were in the Hole, these Points (whereof this Surface consists) would bring it out by this Semi-Ellipsis, which is always press'd by the Seed when the Drill is at work; but as these Points immerge by the other Semi-Ellipsis which is behind the Spindle, they can carry with them into the Hole nothing but Air, because the Cover never suffers any Thing else to come there from above; and the Seed falls out of the Notches by its own Gravity, just before it reaches the Lower-End of the transverse Ax, being the Place where the opposite Ellipses are farthest asunder; and none of it is ever carried so far back as the hinder Semi-Ellipses; and therefore nothing can be carried into the Hole from below.

Thus, that Part of the Surface of the Spindle will keep the Hole empty and clear, before ever any Notches are cut; but when the Notches are made on the Spindle, they have yet a much greater Force to drive and expel whatever would enter the Hole, their Shape being such as nothing can enter against their bevel Ends; but what is at their Ends will be thrown presently into the *Mortise*: Insomuch that when a Spindle has been too little for the Hole by a Quarter of an Inch, that is, a sixth Part of the Diameter of the Hole, it will perform very well in drilling large Species of Seeds, and when the *Mortise* is run empty, nothing at all is found in the Hole, it being thus kept void and clean by the Notches.

Note, That what is here, and elsewhere, said of the Ellipse of the one Side of the *Mortise*, must be understood the same of its opposite Ellipse, on the opposite Side of the *Mortise*.

All these Advantages accruing from this Bevel of the *Mortise*, I believe that without it, all Attempts of making a Machine to perform the Work which this does, would have been vain.

There is also within the *Mortise* unavoidably another Bevel, which is as the Reverse of the former, and notwithstanding is as useful; and this Bevel is, the Inclination which Part of the curvilineal Surface of the Spindle, beginning a little above the Fore-End of the shortest Diameter of the Ellipses, and descending down to the *Seed-Passage*, has to the lower Part of the Surface of the Tongue opposite against it. These two Surfaces meeting one another below, when the Tongue is set up close to the Spindle, form a mix'd Angle, which stops up the *Seed-Passage*, except when a Notch comes against it.

When the Tongue is set from the Spindle, to the Distance of several Diameters of one of the Seeds that are to be drill'd, this revers'd Bevel causes the Seed to arch at the *Seed-Passage*, and stop there, till the Notches force it thro', which would, without this Arching, fall out by its own Gravity, without the Turning of the Wheels.

The Seed arches here the more firmly, the more 'tis press'd upon by the incumbent Seed from above it; and the former Bevel (which I call the Bevel of the *Mortise*) permits the incumbent Weight to press the harder on the Seed that is near the *Seed-Passage*; and this might be reckon'd a fifth Use of the former Bevel: For as it prevents the Seed from arching in any other Part of the *Mortise*, so it does, by the same Means, cause it to arch the more strongly at the *Seed-Passage*, which is sometimes (*viz.* when the Tongue must be set wide) as necessary, as 'tis for it to escape

 arching

arching before it comes thither. And the more strongly this Arch presses against the Tongue, the more the Tongue by its Spring presses against it; and this Pressure being reciprocal and equal, the Seed cannot fall out spontaneously; for when the Passage is thus wide, if you throw into the *Mortise* a few Seeds, suppose five or six at a Time only, they will all pass through immediately, without any Motion of the Wheels; but if you throw in a large Quantity together, there will only a few of the lowermost fall through, unless the Wheels do turn and throw them down by the Force of the Notches.

Indeed we do not care to set the Tongue so very wide from the Spindle, unless it be when we are oblig'd to plant a very much larger Proportion of Seed than the Notches are design'd for, and when we have no Opportunity of changing the Wheels for such as are lower, nor of changing the Spindle for another that has greater or more Notches in it.

Four and twenty Gallons of large Pease, is as proper a Proportion to drill on an Acre, as six Gallons of Wheat is.

There are divers Ways to vary (*i. e.* increase or diminish) the Proportion of Seed; as, first, by the *Setting-Screw*, with which we can, without any Inconveniency, set the Tongue so far from the Spindle, as to permit one Round of the Notches to turn out four Times the Quantity, as it will do when the Tongue is set close up to the Spindle; and thus we can vary the Proportion by innumerable intermediate Degrees.

Next, if we would increase the Proportion yet farther, we can enlarge the Notches; but we cannot add to their Number, unless there be room to double it, by making a new Notch between every two; but we cannot diminish the Proportion of Seed by the same Notches, because they cannot be made lesser or fewer.

If we would make any other Alteration in the Proportion of Seed by the Notches, it must be done by making another Set of them; which we may do, because the wooden Spindle may have three Rows of Notches in it, of which we may use either, by moving the Wreaths and Wheels towards one End or the other of the wooden Spindle; as shall be shewn in the Descriptions of the *Hoppers*.

But as for the brass Spindle of the Turnep Drill, we can have but one Set of Notches in it, and therefore, tho' we can increase the Proportion of Seed by inlarging the Notches, or perhaps by doubling their Number, yet we cannot lessen the Proportion of Seed by the Notches, unless we have a new Set of them, and that will occasion a Necessity of having another Spindle; but as to the *Setting-Screw* of the Turnep Drill, it will increase the Proportion of Seed with the same Notches, much more than the *Setting-Screw* of the Wheat-Drill will do.

The other Way of varying the Proportion of Seed in the same Boxes, is by the Diameter of the Wheels, when we can alter them; for Wheels, of what Diameter soever they are, must turn round all the Notches at one Revolution; so that Wheels of twenty Inches Diameter will deliver out a third Part more Seed than Wheels of thirty Inches diameter, into the same Length of the Channels; but we seldom have any Occasion to alter the Wheels, unless it be on Account of planting a Species of Seed of a different Magnitude, as the largest Sort of Pease, and small-grain'd Wheat, or *Centfoine* Seed are.

These

These are all the Ways we have to alter the Proportion of Seed we drill with the same *Seed-Boxes:* These two Sizes, already described, being sufficient for all Sorts of Corn and Seeds which we commonly sow, from Marrow Pease to Turnep Seed; but for drilling of Beans, the Boxes must be larger, and are commonly made of Wood, the Spindle two Inches diameter, or more, and the Boxes two Inches wide: Where note, that this Increasing of the Width of the *Mortise*, from an Inch and a Half to two Inches, increases the Quantity of Seed to almost double; because this Half-Inch is all added to the Middle of the Notches, where they are deeper than their Ends, the Bevel of which takes up a considerable Part of the Length of the Notches. For Beans, they also contrive to have their Wheels as low as conveniently they can. These wooden Drills are now become common in many Places.

The wooden and brass *Seed-Boxes* differ not in any of the most essential Parts of them; only the wooden Box must be thicker, as the Wood is not so strong as Brass; the Spring is made streight instead of crooked, and being let into the Back of the wooden Tongue, bears against it at each End; and the Channel into which it is placed, being made hollow in the Middle, the Spring has its Play there, and must be stiffer, and have a little more Play in the Bean-Drill, than in any lesser *Seed-Box*.

I, at first, made all my *Seed-Boxes* of dry *Box-Tree* Wood, which perform'd very well, and are still used: But a few Years ago, a Gentleman advised me to make them in Brass; the doing of which has put me to a great deal of Trouble and Expence, for want of understanding the Founder's Art; yet this I do not repent; because they are, in some Respect, better than those made in Wood; especially to those who do not well understand their Fabrick; for to such, the Swelling and Shrinking of the Wood was inconvenient in small Boxes: And I now am told that they are cast in *London* of the best Brass, at the Price of one Shilling *per* Pound, and so smooth as to require very little Filing. And these brass Boxes being also more lasting than Wood, and not much more expensive, when Workmen know how to make them, I think it not worth while to give any particular Directions for making them in Wood.

As to the Spindles of the Turnep Boxes, I have often made them with a mix'd Metal, of half Pewter and half Spelter, which perform very well, and are easily made; because this Metal will melt almost as soon as Lead, in a Fire-Shovel, to be cast in a Mould; but Brass will not melt without a Crucible.

The first Idea that I form'd of this Machine, was thus; I imagin'd the *Mortise*, or Groove, brought from the Sound-Board of an Organ, together with the Tongue and Spring, all of them much alter'd; the *Mortise* having a Hole therein, and put on upon one of the iron Gudgeons of the Wheel-Barrow, which Gudgeon being enlarg'd to an Inch and a Half diameter, having on it the Notches of the Cylinder of a Cyder-Mill, on that Part of it which should be within the *Mortise*, and this *Mortise* made in the Ear of the Wheel-Barrow (thro' which the Gudgeon usually passes) made broad enough for the Purpose; this I hoped, for any thing I saw to the contrary, might perform this Work of Drilling, and herein I was not deceived.

As for placing a Box over this *Mortise* to carry a sufficient Quantity of Seed, it was a Thing so obvious, that it occasion'd very little Thought; and an

an Instrument for making the Channels, not much more; neither for applying two Wheels, one at each End of the Axis, instead of the single Wheel in the Middle of the Axis of the Wheel-Barrow.

At first my Plow made open Channels, and was very rude, being composed of four rough Pieces of Planks, of little Value, held together by three Shoots, or Pieces of Wood, which held them at a Foot Distance one from the other; these Pieces being cut sharp at Bottom, made the Channels tolerably well in fine Ground. But I soon contrived a *Plow* with four iron Shares, to make Channels in any Ground; this drew a *Hopper* after it, having four *Seed-Boxes* at its Bottom, carried on a Spindle by two low Wheels, which had Liberty to rise and sink by the Clods that they pass'd over; the *Seed-Boxes* delivered their Seed immediately into the open Channels.

This *Plow* and *Hopper* were drawn by a Horse, and the Seed lying open in the Channels, was covered sometimes by a very light *Harrow*, and sometimes by a Hurdle stuck with Bushes underneath it.

I soon improv'd this *Plow* to perform better, and to make six Channels at once, and sometimes a great many more.

This *Plow* and *Hopper*, with their Improvements and Alterations, are shewn in *Plates* 4 and 5.

CHAP. XXIII.

Of the *Wheat-Drill.*

FIG. 1. in *Plate* 4. is the *Drill-Plow*, which makes the Channels for a treble Row of Wheat, at Seven-Inch Partitions, and covers the Seed by the *Harrow* which moves on its Beams. A is the Plank, three Foot and a Half long, eight Inches and a Half broad, one Inch and a Quarter thick; its upper and under Surfaces are true Planes. B, B the two Beams, each two Foot four Inches long, two Inches three Quarters broad, and two Inches and a Quarter deep, standing under the Plank at right Angles with it, and held up to it by the four Screws and Nuts a, a, a, a, the one being at the same Distance from the right, as the other is from the left End of the Plank.

This *Plow* makes its Channels by three Sheats, and their Shares and Trunks; the first, or foremost, of which Sheats, stands under the Middle of the Plank, with Part of it appearing at b; and is fully describ'd in *Fig.* 2. where A is the Tenon, of a convenient Size, two Inches broad between Shoulder and Shoulder, three Quarters of an Inch thick; it is driven into the Plank thro' a *Mortise*, and pinn'd up by its Hole; it stands thus obliquely, and pointing forwards, that it may stand the more out of the Way of the Funnel: The Shoulder at a is a Quarter of an Inch. The hinder Shoulder from the Tenon to the Angle at b, is three Quarters of an Inch. The Depth of the Back of the Sheat, and Thickness of the Share, when 'tis on, from b to c, is nine Inches and a Quarter; and the Angle

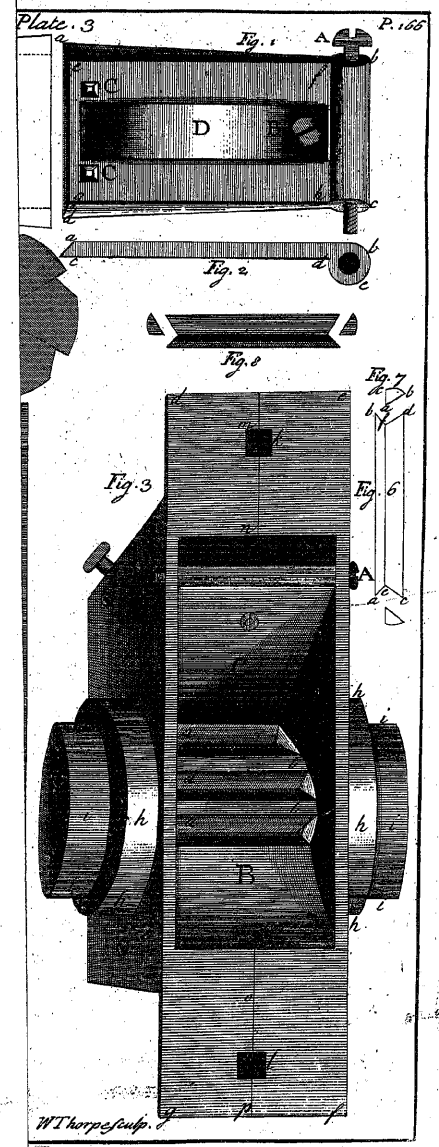

more; neither for ap- instead of the single row. ery rude, being com- alue, held together by m at a Foot Distance at Bottom, made the oon contrived a *Plow* Ground; this drew a carried on a Spindle sink by the Clods that immediately into the

d the Seed lying open ry light *Harrow*, and h it.

to make six Channels its and Alterations, are

makes the Channels for itions, and covers the A is the Plank, three road, one Inch and a rue Planes. B, B the Inches three Quarters g under the Plank at our Screws and Nuts m the right, as the

and their Shares and nds under the Middle d is fully describ'd in ze, two Inches broad an Inch thick; it is by its Hole; it stands tand the more out of Quarter of an Inch. t b, is three Quarters and Thickness of the l a Quarter; and the Angle

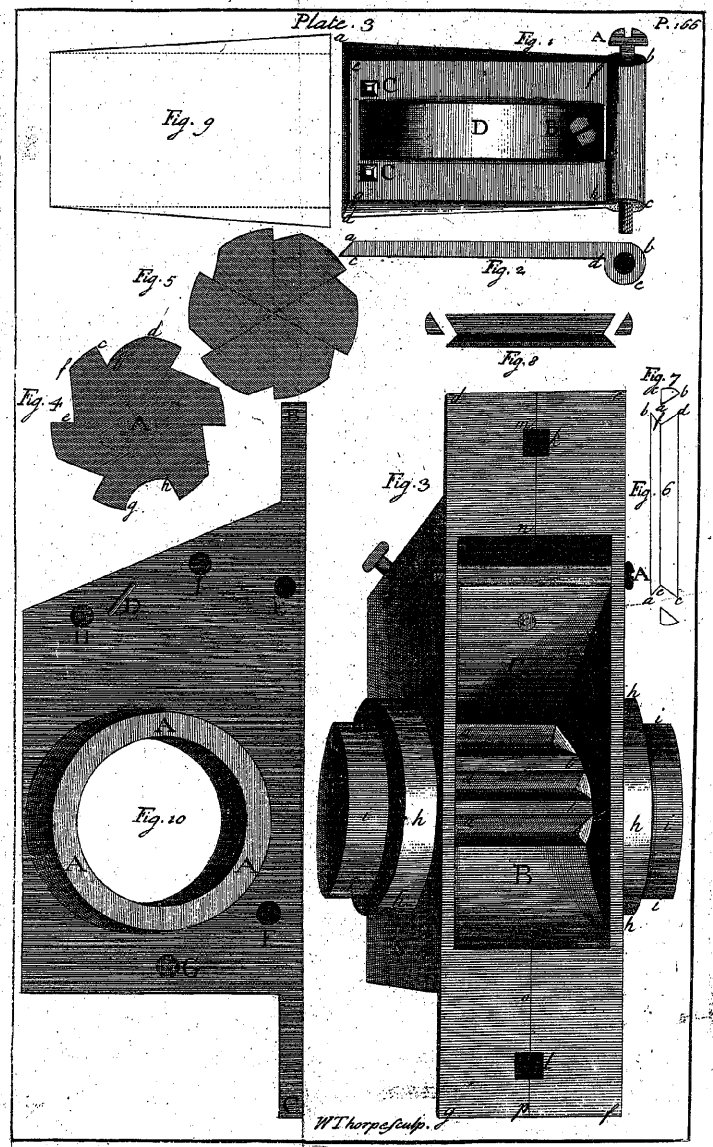

Angle at c must be a right Angle, contrary to the Opinion of some, who fancy it ought to be acute, supposing that when this Angle is right, whilst the Seed is descending by the Back of the Sheat, the *Plow* as it moves forwards, would get before the Seed, and so it might fall to the Ground behind the Trunk; but this Mistake is for want of considering the vast Disproportion between the Celerity of the Seed's Descending near the Earth, and the slow Progress of the *Plow*; the Seed descending at the Rate of sixteen Foot in a Second of Time, and the *Plow* proceeding but about three Miles an Hour, does not advance the Thickness of a Seed, whilst it is falling to the Ground by the whole Depth of the Sheat.

The Thickness of the Sheat is an Inch, at its upper Part.

Fig. 3. Is the Share, lying Bottom upwards. a is its Point. b the Socket, three Inches long, seven Sixteenths of an Inch broad. c is the Hole by which it is fastned up to the Sheat. d is another Hole which is never made use of, except when the Share being fasten'd up by the other Hole, inclines to either Side; then we draw it right by a Nail, driven into this Hole. e, e are two very small Notches, into which the Sides of the Trunk are jointed, to protect them from being torn out by the Earth or Stones that might rub against them. f is the Tail of the Share, which when it is in its Place will make the right Angle before described in *Fig.* 2. and from which Tail to the Fore-Part of the Socket, is the Length of the Bottom of the Sheat, *viz.* six Inches and a Half. The Breadth of the Share three Quarters of an Inch.

Fig. 4. Shews one Side of the Share. The prick'd Line a e shews the Bevel of the Fore-End of the Socket, the upper Edge of which must bear upon the Fore-Part of the Sheat below f in *Fig.* 2. and the other Part of the Share will bear against the Bottom of the Sheat, from d to c, and will be fastned up by a flat Nail, passing thro' the foremost Hole of the Share, and entring the Hole g in the Sheat; which Nail being bended in the said Hole (which Hole should be at least an Inch diameter) will hold the Share fast to the Sheat; and by unbending this Nail, the Share may be easily taken off upon Occasion, without damaging the Sheat. *Note*, This Hole in the Share ought to be wider below than above, and the Head of the Nail of the same Shape, or else as the Share wears thinner, it might come off. The prick'd Line near the Fore-Part of the Sheat, shews where a Shoulder must be cut on each Side of it, because otherwise the Sheat being thicker than the Breadth of the Socket of the Share, could not enter it: But take care that the Share do not bear against these Shoulders.

Fig. 5. Is one Side of the Trunk, being a thin Plate of Iron, and is often made of the Blade of an old Scythe; 'tis to be riveted on to one Side of the Sheat, to another of the same on the opposite Side, by three Rivets passing thro' them both, with the Sheat in the Middle of them; which Holes appear both in the Plate and in the Sheat. These thus riveted on do form the Trunk at the Back of the Sheat. The whole Breadth of this Plate is an Inch and three Quarters; but three Eighths of an Inch being riveted on to the Sheat, there remains but an Inch and three Eighths for the Trunk. The Length of the Plate is the same with the Depth of the Sheat, and Share, except that it should not reach to the Bottom of the Share, by about the Thickness of a Barley-Corn, to the end that it may not bear against the Ground, as the Share doth. The

of ye Share

Notch at the Bottom of the Plate, is that which anſwers the Notch in the ~~Bottom of the Sheat.~~ The Corner of the Plate at a, we make a little roundiſh, that it may not wear againſt the Ground.

This Plate thus riveted on the Sheat, and another of the ſame on the other Side oppoſite to it, compoſe the Trunk, which is *Fig.* 6. a d is the Edge a b of the Plate *Fig.* 5. b c is the like Edge of the oppoſite Side of the Trunk. A is the Back of the Sheat, which together with the Tail of the Share when in its Place, makes the Fore-Part or Length of the Trunk; the Thickneſs of this Back of the Sheat is the Width of the Trunk, and from this Back of the Sheat to the ſaid Edges of the Plates, may be call'd the Depth of the Trunk. The upper Ends of theſe two Plates a and b we ſpread open a Quarter of an Inch wider, for half an Inch down, than the reſt of the Trunk, for the more free Reception of the Seed from the Hole of the Funnel; we likewiſe take care that the two lower hinder Corners of the Trunk do not incline to one another, to make the Trunk narrower than the Back of the Sheat, leſt the Earth ſhould be held in by them, and fill the Bottom of the Trunk.

Fig. 7. Is one of the hinder Sheats, and appears, in part, at c in *Fig.* 1. It is faſtned into one of the Beams by its Tenon, which being driven into a *Mortiſe*, is pinn'd in by a Pin paſſing thro' the Beam, and the Tenon cut off even with the upper Surface of the Beam: This Tenon ſtands more oblique than that of the fore Sheat, that there may be the more Wood between its *Mortiſe* and the Funnel, its hinder Shoulder being ſhort; its fore Shoulder at a muſt be very ſhort, not above the Eighth of an Inch; but its Shoulder b three Quarters of an Inch. The Tenon is alſo ſhoulder'd on each Side, as well as before and behind. The Thickneſs of this Sheat ſhould be greater than that of the fore Sheat; becauſe it is much narrower. The Depth of this Sheat is leſs than the fore Sheat, by the Depth of the Beam; it is in all other reſpects the ſame with the fore Sheat, except that it and its Share are ſhorter. The Socket of this Share is but an Inch and one Eighth long, its Breadth half an Inch, and from the Fore-Part of the Bottom of the Socket to the End of its Tail, but three Inches. Its Point from the Socket at Bottom is but three Quarters of an Inch, whereas the Point of the fore Share is an Inch and three Quarters: There is but one Hole whereby the Share is faſtned up to the Sheat. Its Trunk is no wider than the other; for we cut a ~~Groove~~ on each Side of the Sheat, that the Plates, which are the Sides of the Trunk, may come within three Quarters of an Inch of one another. Its Tenon, being narrower than the Tenon of the fore Sheat, muſt be thicker than it.

The other hinder Sheat, and all its Accoutrements, muſt be the ſame as this of *Fig.* 7.

The Workman muſt take care that the Tenons of the Sheats be not made croſs the Grain of the Wood; and therefore muſt make them of crooked Timber.

Fig. 8. Shews how the Share is made of four Pieces; of which a is a Piece of Steel for the Point, its larger End being cut bevel for the Shape of the Fore-End of the Socket. b is a Piece of Iron for the other End of the Share, from the Socket to the Tail; the other two Pieces c and d are the Iron Sides, which being welded on to the other two Pieces, and cut

cut off to the Length, form the Share with its Socket, more exact than it can be made out of one Piece of Iron.

Now we return to the firſt Figure; where the fore Sheat being fix'd up at equal Diſtance from each End of the Plank, and as near to the hinder Edges of it as can be, allowing Room for the Funnel C to ſtand with the Fore-Side of its Hole, to make one Surface with the Back of the Sheat, and for the hinder Part of the Trunk not to reach the Edge of the Plank, there muſt be alſo Room for the fore Standard D to ſtand perpendicular to the Plank, acroſs the Tenon of the Sheat.

This Standard being cloſe to the Fore-Side of the fore Hopper, there muſt be ſo much Room between it and the Hole of the Funnel, that the Seed may drop from the *Seed-Box* into the Middle of this Hole. Thus much for placing the fore Sheat.

Next for the two hinder Sheats; they muſt be placed at equal Diſtance from the Sides of the Beams, and ſo near to the hinder Ends of the Beams, that there may be Room to make the Funnels in them, and their Tenons to come up between their reſpective Funnels E and F, and their reſpective Standards G and H, which Standards muſt be ſet perpendicular to the Beams.

The Diſtance of theſe Sheats from the Plank muſt be ſuch, that the Wheels of the hinder Hopper may not ſtrike againſt the Plank, nor againſt the Spindle of the fore Hopper; and the Semi-Diameters of theſe Wheels being eleven Inches, there ought to be a Foot between the Center of each Wheel and the Plank; but we ſometimes cut Notches in the Plank, to prevent the Circles of the Wheels from coming too near the Plank.

For the nearer the hinder Sheats ſtand to the Plank, the better; but theſe Beams may be placed nearer to, or farther from the Plank, by their Screws and Nuts, at pleaſure.

Theſe Beams muſt be ſet at ſuch a Diſtance from one another, that the Shares may be fifteen Inches aſunder from the Inſide of one to the Outſide of the other.

To try whether all theſe Sheats and Shares are truly placed, ſet the *Plow* upon a level Surface, and then, if they be right, the fore Share will touch that Surface by its Point and Tail, and likewiſe the hinder Sheats will do the ſame; except that ſome Workmen will have it, that the *Plow* goes better, when the Tails of the hinder Sheats are a Barley-Corn's Thickneſs higher than their Points, and then their Tails will want ſo much of touching the Surface.

The Shares muſt be all of them parallel to the Beams, and conſequently to one another.

The Channel made by the fore Share and Sheat for the middle Row, being at equal Diſtance between the two hinder Sheats, is covered by them, they raiſing the Mould over the Seed from each Side of this Channel.

The *Harrow* I is drawn by the Beams, to which it is faſtned to their Inſides at d and e, having each a ſmall iron Pin, paſſing thro' each End of the Legs of the *Harrow*, and thro' the Beams; each having a Nut on the Outſides of the Beams, and being ſquare in the Beams, that they may not turn therein to looſen their Nuts; but are round near their Heads, that the *Harrow* may eaſily move thereon.

The

The round Ends of the Legs of the *Harrow* are put thro' its Head I, at the round Holes f and g; and pinned in behind it, to the end that either Tine of the *Harrow* may descend at the same Time that the other rises, where the Ground is uneven.

The two wooden Tines K and L are pinned in above the Head, and have each of them a Shoulder underneath. They stand sloping; so that if they take hold of any Clods, they do not drive them before them, but rise over them. They are of a convenient Length, to give Room for the *Harrow* to sink and rise, without raising up the Shares; and to give them the more Room to move: The Legs of the *Harrow* are crook'd downwards in the Middle.

The Distance of these Tines from each other is twenty two Inches; so that each Tine going three Inches and a Half on the Outside of each Channel that is next it, fills it up with Earth upon the Seed, from the Outsides of it; which causes the Rows to come up something nearer the inner Sides of the Channels, than to the outer Sides, from whence the Earth is brought into them by the Tines; and the two outer Rows by this means come up at fourteen Inches asunder, tho' the Channels were fifteen Inches asunder.

This Way of Covering adds more Mould to the Top of a Ridge; whereas if the Channels were covered by Tines, going within or between them, the Mould would be thrown down from the Top of the Ridge: And these Tines stand with their Edges and Points inclining outwards, by which means they bring in the more Earth to the Channels.

If we find that the *Harrow* is too light, we tie a Stone upon it to make it heavier, and sometimes we fix a small Box of Board on the Middle of it, to hold Clods of Earth for that Purpose.

The fore Funnel C has its upper Edges two Inches high above the Surface of the Plank. It is five Inches square at Top; its four opposite Sides being Planes equally inclin'd to each other downwards, until they end at the Hole in the Bottom of the Funnel, which Hole is continued quite thro' the Plank into the Trunk. The Shape of this Hole is shewn in *Fig.* 9. where the four Lines a b, b c, c d, and d a, each Line being three Quarters of an Inch, make a true Square, and are the upper Edges of the Hole. The three prick'd Lines e f, f g, and g h, being each of them longer than the former, tho' as little as possible, make the three lower Edges of the Hole; which being thus wider below than above, and having all its Sides true Planes and smooth, 'tis impossible for the Seed to arch therein. The Fore-Side of this Hole is perpendicular to the upper and lower Surfaces of the Plank, and, together with the Back of the Sheat, makes one plane Surface.

When we drill a large Species of Seed, as Pease or Oats, we can make this Hole a full Inch square at Top, and of the same Shape wider at Bottom; which tho' it be wider than the Trunk, except at its Top, the Seed will not arch there, because there is Room behind, the Plates being broader than the Sides of the Hole; for there can be no Arching in the Trunk, unless the Seed were confin'd behind as well as on each Side.

The Holes of all our Funnels ought to be of the same Shape with this described; tho', as I am inform'd, the Pretenders to the Making of this *Plow*, make the Holes of their Funnels the Reverse of this; which being wrong-way upwards, the Seed is apt to arch in them, except the Holes are very large.

Of this *Plow*, *Fig.* 1, the two hinder Funnels E and F differ from the fore Funnel (which has been described) *first*, in Dimensions; these not being so deep, because they being made in the very Beams, their upper Edges are in the upper Surface of the Beams, and their Holes at the Bottom, being about the Eighth of an Inch deep. The Depth of the Funnels must want the Eighth of an Inch of the Thickness of the Beams; but we make each Funnel an Inch and a Quarter broader at Top than its Beam, by adding a Piece of Wood to each Side of its Beam, which reaches down about half-way its Thickness; and these Pieces being firmly fix'd on by Nails, to the Sides of each Beam, the Legs of the *Harrow* take hold of these Pieces, which are in the Inside of these Beams. When the *Plow* is taken up to be turn'd, the Man who turns it, takes hold of the Head of the *Harrow* with one Hand, and lays the other upon the *Hopper*, or Spindle, to keep it level, and to prevent either of the fore Wheels from striking against the Ground, whilst the *Plow* is turning round.

Another Difference there is between the Shape of these hinder Funnels from that of the former, to wit, that each fore Side of the hinder Trunks must not be quite so oblique as the rest; because then the upper Edge of these fore Sides might be too near the Tenons of the Sheats, and there might not be sufficient Wood betwixt them, to prevent the Sheats from being torn out; a Thing which has never happen'd, that I know off. We sometimes make these hinder Funnels of a roundish Shape, like a Cone inverted; except that the Part which is next the Sheat, is not so oblique as the rest, for the Reason already given.

The only Advantage proposed by this roundish Shape is, that there is less Wood taken out than from the square Corners, and therefore more Wood for the added Pieces to be fastned to the Beams, than in the square Funnels.

M and N are two Pieces of Wood, each eleven Inches long, two Inches broad, and two Inches thick: These are screw'd on near each End of the Plank, by two Screws and Nuts each; they stand parallel to the other Beams, and have each a double Standard, or Fork O, and P in them, perpendicular to the Plank, by which Standards the fore *Hopper* is drawn, and guided, in the Manner as is seen in *Fig.* 21.

These Standards ought to be braced (or spurr'd) before and behind, and on their Outsides; they never being press'd inwards, have no Occasion of Braces there: These are to be so placed, that when the Spindle is in their Forks, it may be exactly over the Hole of the Funnel, so that the Seed may drop ~~in~~ the Middle of it, when the *Plow* stands upon an horizontal Surface, into the Spindle being also exactly parallel to the fore Edge of the Plank.

Fig. 10. Is D in the *Plow Fig.* 1. It is two Foot long, two Inches broad in its narrowest Part, and half an Inch thick in the thinnest Part, and two Inches at its Shoulders above the Plank. It is pinn'd thro' the Plank before the Funnel, having one of its Legs on each Side the Tenon of the Sheat; it stands perpendicular to the Plank; its only Use is to hold the fore *Hopper* from turning upon the Spindle, being put thro' a Thing (*Fig.* 22.) like the Carrier of a Latch, nail'd on to the upper Part of the fore

fore Side of the fore *Hopper*, in which Thing this Standard has Room to play, or move ſide-ways, to the end that either Wheel may freely riſe up.

Fig. 11. Is one of the hinder Standards, which being placed in the Beam, as G or H, perpendicular to it, is driven into a *Mortiſe*, and pinn'd into the Beam. It has a Shoulder behind, and another before, and a third on its Outſide; which Shoulders ſerve inſtead of Braces, to keep it from moving backwards, forwards, or outwards; it is two Foot four Inches long, two Inches broad, and an Inch thick; it is placed with its broad, or flat Sides, towards the Sides of the Beams. It is made ſo thin, becauſe it ſhould have the more Room for the *Hopper* to play on it, and therefore muſt have its Strength in its Breadth. The Part at a, muſt ſtand foremoſt.

The Standards G and H are both alike, except as they are oppoſite: Their Uſe is to draw, guide, and hold up the hinder *Hopper*; they are to be placed perpendicular to the Beams, and at equal Diſtance from each Side of thoſe Beams, and at ſuch a Diſtance before the Funnels, that when the fore Side of the *Hopper* by its whole Length bears againſt the hinder Surface of the Standards, the Seed may drop into the Middle of both Funnels, the *Plow* ſtanding upon an horizontal Surface.

Be ſure to take care, that the Sheats, Funnels, and Standards be ſo placed, that the Spindle of the *Hopper* may be at right Angles with the Beams.

Q and R are Part of the Limbers, which are alſo called Shafts, Sharps, and Thills; from whence the Horſe that goes in them is call'd a Thiller. Theſe Limbers are ſcrew'd down to the Plank, by two Screws and Nuts each. The Limbers are kept at their due Diſtance by the Bar S; near each End of which Bar, there is a Staple with a Crook underneath each Limber, to which is hitch'd or faſtened a Link of each Trace, for drawing the *Plow*. This Bar is parallel to the Plank, and ſeven Inches and a Half before its fore Edge.

The Limbers muſt be mounted higher or lower at their fore Ends, according to the Height of the Horſe that draws in them; and this may be done by the Screws that hold them to the Plank, and by cutting away the Wood at the two hinder Screws, or at the two foremoſt Screws, or by Wedges.

Every Workman knows how to *team* the Limbers; that is, to place them ſo on the Plank, that the Path of the Horſe which goes in the Middle betwixt them, may be parallel to all the Shares, and ſo, that a Line drawn in the Middle of this Path, might fall into a ſtreight Line with the fore Share, ſtanding on the ſame even Surface with the Path; for otherwiſe the *Plow* will not follow directly after the Horſe, but will incline to one Side.

The Uſe of the Trunks of this *Plow* is for making the Channels narrow, of whatſoever Depth they are; but without Trunks, the Channels muſt be made wide by ground Wriſts, which ſpread the Sides of the Channels wide aſunder, to the end that they may lie open for receiving of the Seed; and the deeper they are, the wider they muſt be: By this Width of a Channel, the Seed in it is more difficultly cover'd, and the Channel fill'd with the largeſt Clods, and the Seed comes up of a great

great Breadth, perhaps three or four Inches wide, ſo that the Weeds coming therein are hard to be gotten out.

To avoid theſe Inconveniencies of wide Channels, I contrived Trunks like thoſe deſcribed, except that they were but five or ſix Inches high; and the Tops of their Plates bending outwards from each other, form'd two Sides of a Funnel; and the Wood between the two Plates, being cut bevel at the Top, was as the fore Side of a Funnel to this Trunk; it was open behind from Top to Bottom, the Wheels were low, and the *Seed-Boxes* narrow: The Seed in theſe Channels was eaſily cover'd, eſpecially thoſe Sorts which were ſown in dry Weather; for then the fineſt Mould would run in and cover the Seed, as ſoon as the Trunks were paſt it.

The Seed in ſuch a narrow Channel comes up in a Line, where the Row not being above a Quarter of an Inch broad, ſcarce any Weeds come in it; and when the Weather is dry, the Earth of the Channel not lying open to be dry'd, the Seed comes up the ſooner.

I had two Reaſons for making of theſe Trunks higher, as they are now us'd: The one was to avoid the too great Length of the Shares; and my other Reaſon was, that with thoſe low Trunks, and long Shares, there could not be two Ranks of Shares, and their *Hoppers* in the *Plow*, which are neceſſary for making very narrow Partitions, and abſolutely neceſſary for planting this treble Row of Wheat; for if three Shares for making the ſeven-inch Partitions were placed in one Rank, the Mould (which is always moiſt or wet, when we plant Wheat) would be driven before the Shares, there not being Room for it to paſs betwixt them.

Fig. 12. Is one End of the hinder *Hopper* laid open. I call it one End (altho' it be an intire Box by itſelf) becauſe this *Hopper* is ſuppoſed to have its middle Part cut out, to have a clearer Sight of the *Plow* and fore *Hopper*; as is ſeen in *Fig.* 15, which is the whole *Hopper* in two Parts. In this *Fig.* 12, A is the Inſide of one End of the *Hopper*, made with ſeveral Pieces of half-inch Elm Board nail'd on to the Poſt c a, on the fore Side; which Poſt is a little more than half an Inch ſquare, and ſeventeen Inches and three Quarters long, being the Depth of that Part of the *Hopper* which holds the Seed. B is the fore Side of this *Hopper*; which muſt be nail'd on to the ſaid Poſt, being of the ſame Length with it, and four Inches broad, and half an Inch thick; and this is the Part which on its Outſide goes againſt the right-hand Standard of the *Plow*, when 'tis at Work. The other Poſt b d, of the ſame Thickneſs with the former, is nail'd in within half an Inch of the oppoſite Edge of this End; to which Poſt alſo C being nail'd, makes the hinder Side of this Part of the *Hopper*. C is four Inches broad, and half an Inch thick, and both it, and the Poſt to which it is to be nail'd, are ſomething longer than its oppoſite Side, becauſe the Side B makes right Angles with the Top and Bottom of the *Hopper*; but the hinder Side C makes oblique Angles with the Top and Bottom of the *Hopper*; and the Reaſon of this is, becauſe when the *Hopper* is full of Seed, it may be equally pois'd on the Spindle; which it could not be without this Bevel, unleſs the Bottom of the *Hopper* did come as much behind the Spindle as before it, and that would hinder the Perſon that follows the *Drill*, from ſeeing the Seed fall out of the *Seed-Box* into the Funnel; and that Part of the Bottom which is before the Spindle, cannot be made ſhorter, becauſe that Part of the

the *Seed-Box* which is before the Spindle, is (upon account of its Tongue) much longer than the Part of it which is behind the Spindle: 'Tis true that when the *Hopper* is empty of Seed, it cannot be thus pois'd; but then being so light, it does not require it. e f g h is a Piece of a Board, nail'd on to that Part of the End A, which is below the Bottom of the Cavity which holds the Seed, and is commonly plac'd a little cross the Grain of the Board to which it is nail'd, and serves to strengthen it, and keeps the Hole i from splitting. The upper Edge e f of this added Piece of Board, is exactly the Length of the Bottom of the *Hopper*, whereto the brass *Seed-Box* is fastened; and this Bottom, together with its *Seed-Box* under it, being put into its Place, bears upon this Piece from e to f, which holds up the right Side of the Bottom, and keeps it from sinking downwards; as the lower Ends of the two mention'd Posts, and the fore and hinder Side B and C nail'd to them, prevent its rising upwards.

The Manner of making the Hole i, is as follows: Place the *Seed-Box* with its fore End at e, and hinder End at f, with the Base of its Cylinder (or great Hole) against this added Piece of Board, and its upper Edge exactly the Height of the Edge e f; then with a Pair of Compasses put thro' the Cylinder of the *Seed-Box*, mark round the inner Edge of its Base upon the added Board; then take off the *Seed-Box*, and find the Center of the mark'd Circle, and then with a Tool call'd a Center-Bit, of the right Size, bore the Hole quite thro' the double Board, and this Hole will be in the right Place, and of the same Diameter with the Spindle; but in case there is to be a brass Wreath on that Part of the Spindle which is to turn in this Hole, then the Hole must be bor'd of the same Diameter with that Part of the Wreath which is to enter it, and that may be perhaps near a Quarter of an Inch longer than the Diameter of the Spindle, upon which it is fasten'd.

This End A thus bor'd and shap'd, is a Pattern for its Opposite, and for the other two Opposites of the other Cavity, which holds the Seed at the other End of the *Hopper*.

When the Opposite of A (with the two like Posts whereto the fore Side B, and the hinder Side C are nail'd, and having a like Piece of Board in its lower Part with a like Hole in it) is added, and when the Bottom (four Inches broad) with its *Seed-Box* under it, is thrust in at f by the prick'd Lines until it reach e, bearing on one Side upon the Piece of Board e f g h, and the other Edge of the Bottom bearing in like manner upon the opposite Piece, then this Cavity of the *Hopper* which will contain about two Gallons of Seeds will be finish'd.

Note, The Bottom must make a right Angle with the two fore Posts, having the Side B perpendicular to it.

D Is a Part of the Board which comes out farther than the *Hopper*, in order to hold a Bar at k; which being fastened there, and in like manner to the Opposite of this Board, this Bar bearing against the fore Part of the Standard, the *Hopper* and its Wheels are in part drawn by it.

Into the Notch l is fastened one End of a long Bar, which passes the whole Length of the *Hopper*, and holds the upper Part of its two Cavities in their Places, as is seen mark'd D, in *Fig.* 15.

E Is Part of the Board which comes before the *Hopper*, and whereto one End of a Piece of Wood is fastened by Nails or Screws, which bearing

ing against the fore Part of the Standard, and against its Inside, the *Hopper* is in part drawn and guided by it, as shall be shewn in *Fig.* 15.

Fig. 13. Shews the Outside of the Figure last describ'd. A is the Standard by which this End of the *Hopper* is drawn, in the Manner as it is here placed. B is one End of the Spindle passing thro' the *Hopper* and *Seed-Box*. C the Bottom, having the *Seed-Box* fasten'd on to it, with one Screw before, and another behind, with their Nuts underneath, and the Heads of their Screws very thin, and the Pins square at Top, that they may not turn in the Wood; and their Heads must either be let into the Wood, even with the Surface, or else the Sides B, C of the *Hopper* must be cut for these Heads of the Screws to pass in under them.

This bottom Board which holds the brass *Seed-Box*, is four Inches broad, and full half an Inch thick, and at each End a Quarter of an Inch longer than the *Seed-Box*: This Piece is first thrust in sliding upon the two added Pieces of Board, until its fore End come under the fore Side of the *Hopper*, and its hinder End under the hinder Side; then setting the *Hopper* with its Bottom upwards, the Spindle being thro' the *Seed-Box*, and Holes of the *Hopper*, we hold the *Seed-Box* hard upon the Bottom, at equal Distance from each End of it, whilst the Holes are bored thro' the Bottom, by the Holes at each End of the *Seed-Box*; and then the Screws being put thro', screw on the Box; and when that is done, we make a Mark upon the bottom Board, with the Compasses, on each Side of the brass Box, beginning from the Ends of the Axis of the Tongue, reaching as far backwards as is the Length of the *Mortise*: These two Lines or Marks are a Direction for cutting the Hole in the Bottom of the *Hopper*, thro' which the Seed descends into the *Seed-Box*; then we pull out the Spindle, then draw out the Bottom, take off the *Seed-Box*, and cut the Hole in the Bottom in the Manner I'll now describe in *Fig* 14. where the two prick'd Lines a b and c d are the lower Edges of the Hole, and the same with the two Lines mention'd to be mark'd by the Sides of the *Seed-Box*: The prick'd Line a d being at right Angles with the two former, is the lower Edge of the fore End of the Hole, and exactly over the Axis of the Tongue, and parallel to it; the prick'd Line b c is the lower Edge of the hinder End of the Hole, which is just over the hinder End of the *Mortise*, and parallel and equal to the last mention'd prick'd Line; these four Lines are the lower Edges of this Hole, contiguous to the *Seed-Box*: The two Lines e f and g h are the upper Edges of the Sides of the Hole, which being farther asunder than the lower Edges, make the reverse Bevel of this Hole; which may be determin'd by this, that the Surface between these two upper and lower Edges, being Planes, are inclin'd to one another downwards, in an Angle of about one hundred and thirty Degrees; the two Lines e h and f g, at right Angles with the two last mention'd Lines, make the upper Edges of the Ends of this Hole; and being nearer together than the prick'd Lines under them, the plane Surfaces, betwixt these two Lines and those two prick'd Lines, shew the Bevel of the Ends of these, which are inclin'd to each other upwards, in an Angle of about sixty five Degrees. Prick'd

This double Bevel effectually prevents the Seed from arching in the Hole, before it gets into the *Mortise* of the *Seed-Box*; and also the two upper Edges of the Ends of the Hole, being nearer together than the lower,

lower, there is the more Wood left between these Edges and the Screws, which hold the Box to the Bottom, whereby the Board is less apt to split.

Then the Box being screw'd on to the Bottom, and thrust again into its Place, the Spindle passing thro' both the *Hopper* and the Box, keeps the Bottom in its Place; then D, in *Fig.* 13. is the imaginary Plane of the Top, or Mouth of the *Hopper*, being a rectangled Parallelogram, and parallel to the Bottom, to which the fore End is perpendicular, and a rectangled Parallelogram of the same Breadth.

Fig. 15. Shews the fore Side of the whole hinder *Hopper*, with its two Cavities, and all its Accoutrements, except the Wheels. The two Ends A and B being exactly alike, having each of them its *Seed-Box* at the Bottom, in the same Manner as in the one has been described. The Bar D holds together the upper Parts of this double *Hopper* at a right Distance, which is, when there is ten Inches clear Room betwixt the two single ones. The Spindle E passing thro' the whole, holds the two single *Hoppers* by four Wreaths, at the same Distance below, as they are held by the Bar above.

These four Wreaths are screw'd on to the Spindle, to keep it from moving towards either End, as well as to hold the *Hoppers* in their Places; Two of which Wreaths are seen at a and b; and the other two are placed on the Outsides, as these two are on the Insides. Before we proceed any farther in this Figure, 'twill be proper to shew the Wreaths, which are of two Sorts.

The one in *Fig.* 16. where A is its Hollow, which is circular, and must be of the same Diameter with the Spindle, and being thrust on upon the Spindle, till it touch the Board, is fasten'd to the Spindle by a small Screw thro' each of its opposite Holes. a b shews the Breadth of this Wreath, whether it be made of Brass or Wood; it is little more than half an Inch. b c d is the Part of it that goes against the Board; the Thickness of the Surface of this End which goes against the Board, is a Quarter of an Inch, if made with Brass, but if with Wood, half an Inch; but the Thickness of its other End a e f is less than its End b c d, by which means the Screws are the more easily turned in.

Fig. 17. Shews the other Sort of Wreath, which is always made in Brass; its Cavity is a hollow Cylinder like the former; when it is on the Spindle, its End a b c is thrust into the Hole of the Board (made wider for the Purpose) until d e f come close to the Board, and stop it from entring any farther; then we screw it on to the Spindle by the Holes, as the other Sort of Wreath is describ'd to be screw'd.

This is the best Sort of Wreath; because it keeps the Spindle from wearing against the Edges of the Hole, and then the Spindle never has any Friction against the Wood in any Part of it; but the other Sort are more easily made, (especially of Wood) and the Spindle will last a great while in them; or if it be worn out, the Expence of Three Pence, or Four Pence, will purchase a new Spindle.

Now I must return to *Fig.* 15, where the Spindle E, having its four Wreaths fixt on it, we turn it round with our Hand, to see whether the Wreaths are put on true; and when they are so, neither the Spindle nor the *Hoppers* can move end-ways. Tho' the Spindle be pretty hard to turn round, the Wheels will soon cause it to turn easily; whilst the Spindle is in

in this Posture, we turn the *Hopper* Bottom upwards, and mark the Spindle for cutting the Notches in the Manner before directed; and then we take off the Spindle, and cut the Notches, and also cut each End of the Spindle square, up to a Shoulder at each End, so that the Wheels may come easily on without Knocking or Thrusting; and then we return the Spindle to its Place, and put on the Wheels, pinning them on with each a long Nail, which being crook'd at the Ends prevents it from falling out, but may be very easily pull'd out with the Claws of a Hammer; but we must take Care that neither the square Ends of the Spindle, nor the square Holes in the Naves (or Hubs) of the Wheels (into which they enter) be taper, for if they are taper, the Wheels will be apt to work themselves off.

The Piece of Wood, *Fig.* 18. is that which goes over the Standard, and being plac'd in the *Hopper*, as F in *Fig.* 15. draws that Part of the *Hopper* by its Inside a b bearing against the fore Part of the Standard; and that Part of it from b to c, being the Breadth of the Standard, bears against its inner Inside, to prevent the *Hopper* from going any farther towards that End. This Piece of Wood is fasten'd to the Boards of the *Hopper*, either by Screws or Nails; ~~the Thickness of~~ this Piece, from d to e, must be of such a Thickness, that the Standard bearing against its Inside b c, may be equidistant from each Board, to which this Piece is fasten'd. The Part, or fore Side of this Piece f g, must be the Length of the Distance between Board and Board, to which it is fasten'd, and that is exactly four Inches. Its Thickness and Depth must be such as may make it strong enough for the Purposes intended.

The Piece mark'd *Fig.* 19. is the Opposite of the former, and to be placed in the same Manner, and as it is seen mark'd G in *Fig.* 15. Observing always, that the Part of it, which holds the *Hopper* from moving end-ways, must always be on the Inside of the Standard; for if these Pieces should bear against the Outsides of the Standards, the *Hopper* could have no Play upon them, nor could either of the Wheels rise up, without raising the Share (that was next to it) out of the Ground; but being thus placed, either Wheel may rise without the other, and without raising the Share.

I say more of this, because it is a Point wherein young Workmen are apt to mistake.

Thus having shewn, in *Fig.* 15. how the *Hopper* is guided and drawn at the lower Part, I come next to shew how it is held and drawn at its upper Part; for which the Piece of Wood, *Fig* 20. being of a competent Breadth and Thickness, four Inches long, is fix'd in betwixt the Boards with Nails or Screws; and is H in *Fig.* 15. The Standard passing up betwixt this and the fore Side of the *Hopper*, its fore Surface bearing against this Bar, and its hinder Surface against the *Hopper*; so that the *Hopper* may rise and sink easily upon the Standard at Top, being in the Middle of the fore Side of the *Hopper*, there will be an equal Distance ~~of~~ each Side, for either Wheel to rise, without the Standard striking against the Sides of the *Hopper* to hinder its Rising. There is another Bar equal to this, and has the same Office, at the other End of the *Hopper*, mark'd I. Likewise the Bar D is of the same Use with these mention'd short Bars, and they help to strengthen one another.

When

When the Wheels are put on till they reach near to the Wreaths, they will ſtand with their Rings, or Circles, two Foot three Inches aſunder.

We ſet them as near together as conveniently we can; becauſe when they are too wide, they are apt to draw the *Plow* towards one Side of the Ridge; and ſometimes when the Ridge is high, the *Hopper* might bear upon the Funnels, and then the Wheels being carried above the Ground, would not turn to bring out the Seed: And that theſe Wheels may come the nearer together, their Spokes are ſet almoſt perpendicular; ſo that the Wheels are not concave, as other Wheels are. This *Hopper* is ſhewn, put on upon its Standards, in its Place, in *Fig.* 21. where the mention'd Bar D, which holds the *Hopper* together at Top, is ſeen, as alſo the four Wreaths, and likewiſe the hinder End of the *Seed-Boxes* ſtanding over the Funnels, with their Trunks underneath them. Here alſo the back Part of the fore *Hopper* is ſeen, with its *Seed-Box* ſtanding over the fore Funnel; its Mouth alſo is ſeen at A; as alſo the Top of its fore Side held up by the Thing (*Fig.* 22.) like the Carrier of a Latch, with the Nails in it, which faſten it to the Top of the fore Side of the *Hopper*, and give Room for either of its Wheels to riſe.

This fore *Hopper* may be eaſily deſcrib'd by the Figure of ~~the~~ a Box, like the other already deſcrib'd, at its Ends, which are of the ſame Shape with the Inſide of the Box, *Fig.* 12. but much lower, being ſeven Inches and a half deep, and ſixteen Inches long, and the Breadth of its Bottom is determin'd by the Length of the *Seed-Box*, and a little wider at Top, on account of the Bevel which poizes it; it carries no more Seed than one End of the hinder *Hopper*, but it is capable of holding more; but we do not fill it quite, leſt ſome of the Seed ſhould fly over in Jolting, its Mouth being ſo much longer than of the other.

This *Hopper* is kept in its Place, from moving end-ways upon the Spindle, by a Wreath fix'd to the Spindle at each End of the Box, in the ſame Manner as has been deſcrib'd for holding the other *Hopper*. The Wreaths moſt proper for this Purpoſe, are the Sort deſcribed in *Fig.* 17. but the other Sort deſcribed in *Fig.* 16. and even made with Wood, will ſuffice; but then we muſt take Care to make the Hole at the End of the *Hopper* of a conſiderable Thickneſs, that it may not wear the Spindle, which by reaſon of its great Length, is the more liable to bend, and be cut by the Edges of the Holes; which Cutting cannot be prevented but by the Thickneſs of the Holes, or by ſuch Wreaths as that of *Fig.* 17.

We ſometimes make this *Hopper* exactly like a common Box, without any Part of its Ends deſcending below the Bottom; and in that Caſe, we place a narrower Piece of Board at each End of the *Hopper*, like that of *Fig.* 23. in which Figure, the Hole A being put on upon the Spindle, the Piece of Board is faſten'd on by a Screw and Nut thro' the Hole B, near the Top of the End of the *Hopper*, and by another Screw and Nut thro' the Hole C, near the Bottom of the *Hopper*. Another ſuch a Piece of Board, fix'd on in the ſame Manner to the oppoſite End of the *Hopper*, holds this long *Hopper* parallel to its Spindle, that paſſes thro' the Holes of theſe two Pieces, and thro' the braſs *Seed-Box*, which is fix'd up to the Bottom, in the Middle betwixt them.

There are two Methods for letting the Seed paſs from a long *Hopper* into the *Seed-Box*. The *firſt* is that of cutting the Hole thro' its Bottom, in

in the Manner that has been ſhewn in *Fig.* 14. The other is that which cannot be uſed in a *Hopper* ſo ſhort, as the Boxes of our hinder *Hoppers* are; but in the fore *Hopper*, or any other long *Hopper*, we can place the braſs *Seed-Box* to a Bottom made for the Purpoſe, like that in *Fig.* 24. where there is a Piece of Board on the fore Part of the *Hopper* from End to End, as a b, and another on the hinder Part of the *Hopper*, as c d. Then the fore Part of the braſs *Seed-Box* being placed under the Piece a b, is ſcrew'd up to it at e, and the hinder Part of the *Seed-Box* under c d ſcrew'd up to it at f; then the Bottom of the *Hopper* being open in the Middle, is ſhut by very thin Boards, g and h, fix'd up to the mention'd Pieces; theſe Boards having their upper Surface even with the upper Edges of the braſs Box, the Seed can no way arch in coming into the *Mortiſe* of the *Seed-Box*. Whichever of theſe two Methods be made uſe of, in a long *Hopper*, the Bottom muſt be fix'd to the two Sides, by ſmall Bars of Wood of about three Quarters of an Inch ſquare, to which the Bottom and Sides are faſtened by Nails, in the Manner that the Ends and Sides of the hinder *Hopper* are faſtened to their Poſts, which ſtand in their Corners.

We take the ſame Method for cutting the Notches in this Spindle, as has been deſcribed for cutting the Notches in the other Spindle.

But obſerve, that the great Length of this Spindle requires it to be the larger, and we make it of an Inch and three Quarters Diameter, the other being only an Inch and a Half; we therefore bore the great Hole or Cylinder of its braſs *Seed-Box*, a Quarter of an Inch in Diameter larger than of the braſs *Seed-Boxes* of the hinder *Hoppers*; and we commonly make a Notch more in the Circumference of this Spindle, becauſe the Semi-Diameters of its Wheels muſt be as much greater than of the hinder Wheels, as is the Thickneſs of the Plank, and the Ends of the Limbers which are betwixt this Spindle and the upper Surface of the two Beams.

We make all our Spindles of clear-quarter'd Aſh, without Knots or Crooks; and when they are well dry'd, and made perfectly round, and of equal Diameter from one End to the other, by the Prong-Maker, we pay a Penny *per* Foot for them at the firſt hand, and they will now and then have ſomething more for the largeſt Size; but we are only curious to have the middle Part of this long Spindle exact, for we graft on a Piece at each End, which does not require any Exactneſs: The Graftings are ſeen at a a at one End, and b b at the other End of the Spindle (in this *Fig.* 21.) by four flattiſh iron Rings driven on upon the grafted Parts, as they appear under thoſe Letters in the Middle. Between each Pair of theſe Rings, we drive a ſmall iron Pin thro' the Joints at c and at d, to keep the Grafts from ſeparating end-ways; and if they are not tight enough, we make them ſo, by Wedges driven in betwixt them and the Spindle.

This fore *Hopper* is drawn by the Spindle, and the Spindle is drawn by the two double Standards B and C, betwixt whoſe Forks it is placed, as appears in this Figure: The Diſtance between each Fork, or double Standard, being exactly the Diameter of the Spindle, ſo that the Spindle may have juſt Room to riſe and ſink there, and no more.

The *Hopper* and Spindle are guided, or kept in their Place, from moving end-ways, by two Wreaths ſcrew'd on to the Spindle, the one at e, and

and the other at f; each of which Wreaths bearing against the Surfaces of both the Legs of each double Standard, on the Sides next to the *Hopper*, prevent the Spindle and *Hopper* from moving towards either End, and yet admit the Wheels, or either of them, to rise and sink without raising either Side of the *Plow*, contrary to what would happen if the Wreaths were placed on the Outsides of the Standards next to the Wheels.

We make these Wreaths a little different from the other Sort of Wreaths, which turn against the Holes; we make them of a greater Diameter, lest they should at any Time get in betwixt the Legs of the double Standards, in case the Standards should be loose, or bend; therefore we make the Diameter of each of these Wreaths, at least two Inches and three Quarters; we always make them of Wood, and of a peculiar Shape, taking off their Edges next the Standards, which Edges would be an Impediment to the Rising of one End of the Spindle without the other. So that for making these Wreaths, we may form a Piece of Wood of the Shape of a Skittle Bowl (or an oblate Spheroid) having an Inch and three Quarter Hole bor'd thro' its Middle, and then cut by its Diameter (which is about three Inches) in two Halves, each of which will be one of these Wreaths, and they must be placed on the Spindle, with their convex Sides bearing against their respective Standards.

The Diameter of the fore Wheels is about thirty Inches, as the Diameter of the hinder Wheels is about twenty two.

The fore Spindle should be of such a Length, that its square Ends, E and F, may come out three or four Inches farther than the Hubs (or Stocks) of the Wheels; so that there may be Room to shift the Wheels towards either End, for making several Sets of Notches, for the Use of the *Seed-Box*.

Observe, tho' the fore *Hopper* is drawn by its Spindle, yet the hinder Spindle is drawn by its *Hopper*.

The Reason of this great Distance between the two fore Wheels, is not so much for their serving, as Marking Wheels to this particular *Drill*; which being drawn only upon a Ridge, its Top is a sufficient Direction for leading the Horse to keep the Rows parallel to one another, if the Ridges are so; but if the Wheels were much nearer together than they are, and yet more than six Foot asunder, the Wheels going on the Sides of the next Ridges, would be apt to turn the *Drill* out of the Horse-Path towards one Side, not permitting the *Drill* to follow directly after the Horse; and if the Wheels should stand at six or seven Foot Distance from one another, then they must go in the Furrows which are on each Side of the six-foot Ridge: This would occasion their *Hoppers* to beat upon the Plank, which would carry the Wheels above the Ground, and no Seed would be turned out of the *Hoppers*, unless the Wheels were of an extraordinary Height; and the Height requir'd for them would be very uncertain, some Furrows being much deeper than others; but the Tops of contiguous Ridges are generally of an equal Height, whether the Furrows betwixt them be deep or shallow; for we seldom make Ridges of an unequal Height in the same Field; therefore there can be no need to change the Height of our Wheels, that are to go upon the Middle of the Ridges; but if they went in the Furrows, they must be of a different Height when used for drilling of high Ridges, ~~for~~ what would be required when used for drilling low Ridges.

One

One Reason why the hinder Shares are shorter than the fore Share (and consequently the fore Part of their Sheats less oblique) is, that they may be set the nearer to the Plank; and I have had a *Drill* with five Shares in the Plank, fourteen Inches asunder, and four of these hinder Sheats following in another ~~Plank~~ Rank, whose Shares were less than three Inches long; so that their Beams were set so far forwards, that one *Hopper* (by a Contrivance, that carried the Seed forwards to the fore Rank, and backwards to the other Rank) supply'd the Seed to both Ranks of Trunks, and planted *St. Foin* in Rows seven Inches asunder, when the Ground was too rough to be planted with Rows at that Distance by one Rank of Shares.

It may be objected, that the fore Part of these hinder Sheats might not be oblique enough to raise up the Strings of Roots or Stubble, which might come across them in their Way; but this Inconvenience is remedied by the greater Obliquity of the fore Shear (or Sheats) which clears the Way for the hinder Sheats, by raising out of the Ground such Strings, *&c.* which might annoy them; especially, in this Wheat *Drill*, where the fore Share so clears the Way of the hinder Shares, that they can take hold of no String in the Ground, except of the Ends of such which the fore Share has loosen'd; and they hanging faster in the Ground by their other Ends, the hinder Shares slip by them without taking hold of them; and the *Harrow* Tines going after so near to the Channels of the hinder Sheats, by the same means escape also from hanging in such Strings.

The Reasons for placing the one Share and one *Hopper* before, and the two behind in this Wheat *Drill*, are so many, and so obvious, that it would be but losing of Time to mention them.

The Limbers G and H, we make of Aspen, Poplar, or Willow, for Lightness; we make them as small and light as we can, allowing them convenient Strength, and the shorter they are, the more exactly the *Drill* will follow the Horse, without the Hand of him that follows the *Drill*, whose chief Business is, with a Paddle to keep all the Shares and Tines from being clogged up by the Dirt sticking to them, and also to observe whether the Seed be delivered equally and justly to all the Channels.

These Limbers should approach so near together at their fore Parts near the Chain, that there may be none or very little Room betwixt the Limbers and the Horse, and therefore must be nearer together for a very little Horse than for a great one. The Horse, which I have used in all my *Drills*, for these many Years past, is a little one, about thirteen Hands high, and the fore Part of my *Drill* Limbers are twenty Inches wide asunder at the Chain.

At g on the Outside of the Limber G, is a small Staple driven in, having one Link on it, which holds a small Hook, which taking hold of different Links of the very small Chain I, raises or sinks the fore Part of the *Plow* to different Heights. But take care to set it at such a Degree, that the fore and hinder Shares may go equally deep in the Ground; and when they do so, the fore Part of the Limbers ought to be higher than the Traces which draw them.

At h in the Limber H, is driven another Staple, which holds the other End of the Chain; or else, instead of a Chain, we may make use of a Piece of Cord, one End of which put thro' this Staple, and ty'd to the Limber, and a Piece of Chain of half a Dozen Links fasten'd to the other End of

such

ſuch a Cord, will ſerve as well as a whole Chain, for raiſing and ſinking the Limbers.

He who can by theſe Directions make this Wheat *Drill*, may very eaſily make any other Sort of *Drill*, for planting any Sort of Corn, or other Seeds that are near about the Bigneſs of Seeds of Corn: He may make it with a ſingle Row of Sheats, by placing as many of theſe fore Sheats as he pleaſes in the Plank, which may be longer or ſhorter, as he thinks fit; and he may add a Beam betwixt every two of them, with the Sheat in it, like theſe hinder Sheats, and then the *Drill* will be double, having two Ranks of Shares. But I muſt adviſe him never to make a *Drill* with more Shares than will be contain'd in four Foot Breadth, that is, from the outermoſt on the right Hand, to the outermoſt on the left Hand; for ſhould the *Drill* be broader, ſome of the Shares might paſs over hollow Places of the Ground without reaching them, and then the Seed falling on the Ground would be uncover'd in ſuch low Places.

To a *Drill* that plants upon the Level, Marking Wheels are neceſſary, to the end that every Row may be at its due Diſtance. As in a *Drill* with five Shares, for planting Rows eight Inches aſunder, four of the five cannot err, becauſe four equal Spaces are included betwixt the five Shares; but the fifth (which we call the planting Space) being on the Outſide unconfin'd, would ſcarce ever be equal, were it not kept equal by the Help of the Marking Wheels: The Rule for ſetting of theſe is thus; we compute altogether the five Spaces belonging to the five Rows, which being in all forty Inches, we ſet the Marking Wheels eighty Inches aſunder, that is, double the Diſtance of all the Spaces, each Wheel being equidiſtant to the Middle of the *Drill*, which Middle being exactly over the Horſe-Path, when the *Drill* is turn'd, the Horſe goes back upon the Track of one of theſe Wheels, making his Path exactly forty Inches diſtant from his laſt Path; by this means alſo the Rows of the whole Field may be kept equidiſtant, and parallel to one another, ſo that it will be difficult for an Eye to diſtinguiſh the parting Rows from the reſt.

But when two different Sorts of Seed are planted, ſuppoſe a Row of *St. Foin* betwixt every Row of Barley, the Rows of which being eight Inches aſunder, and the Barley drill'd by the fore *Hopper* into the Channels made by the five Shares, and the *St. Foin* drill'd from the hinder *Hopper* into the Channels made by ſix Shares, the Marking Wheels muſt be at no greater Diſtance than thoſe above mention'd, where there are only five Shares; becauſe one of the ſix which are for the *St. Foin*, muſt always return in the ſame Channel, going twice therein; for one Row of Barley would be miſſing, in caſe the parting Space ſhould be made by this ſixth Share, and that parting Space would have no Barley in it. Therefore 'tis a Rule that whenſoever two Sorts of Seeds are drill'd, the Rows of one Sort betwixt the Rows of the other, there muſt be an odd Share in the *Drill*, which muſt go twice in one Channel, and the Diſtance of the Marking Wheels muſt be accounted from that Rank of Shares which are the feweſt: It muſt alſo be contriv'd in this Caſe, that each outermoſt *Seed-Box* muſt deliver but half the Quantity of Seed that each of the inner *Seed-Boxes* do; becauſe the outer ones going twice in a Place, their Channels would otherwiſe have a Quantity of Seed double to the reſt.

In

In a *Drill* that has two Spindles, we place the Marking Wheels on the foremoſt, which upon their Account is the longeſt; but if we ſhould uſe the Wheels of the hinder Spindle as Marking Wheels, then that muſt be the longeſt, and ſo the fore Wheels (their Semi-Diameters being much longer than the Semi-Diameters of the hinder Wheels, and their Spindles ſhorter) would ſtrike againſt the hinder Spindle, unleſs it were ſet farther back than is convenient.

When Ground is harrow'd the laſt Time before 'tis to be drill'd, we contrive that the *Harrows* may not go directly towards the ſame Point that the *Drill* is to go, leſt the Track of the Marking Wheel ſhould be exactly parallel with the Track of the *Harrow-Tines*, which might make it difficult to diſtinguiſh the Track of the Wheel from that of the *Harrow-Tine*.

He that has not a great Quantity of Ground to plant with *St. Foin*, and does not plant it betwixt Rows of Corn, will have Occaſion for no other *Drill* than this *Wheat-Drill*, deſcrib'd in *Fig.* 21. He may plant his Rows at fifteen Inches aſunder, by the hinder *Hopper* and its Shares, without removing them, the fore *Hopper* being taken off; or elſe you may plant three Rows at ſixteen Inches aſunder, by ſetting the Beams and their *Seed-Boxes* and *Hoppers* at thirty two Inches aſunder inſtead of fifteen, equidiſtant from the fore Share; and then the Marking Wheels, which are thoſe of the fore Spindle, muſt be eight Foot aſunder, to wit, double to the Spaces of the three Shares, which are three Times ſixteen (or four Foot); or you may ſet the two hinder Beams, *&c.* at what Diſtance you pleaſe, ſetting the Marking Wheels to correſpond with them; but then the *Harrow* muſt be alter'd, and both its Legs and Tines muſt change their Places in the Head, the Legs for guiding it exactly, and the Tines to follow in all the three Rows, which will require a third Tine to be added in the Middle, between the other two; but without any other Alteration than that of taking off the fore *Hopper*, and that of leſſening the *Seed-Paſſages* of the hinder *Hopper* by the *Setting-Screws*. My Man planted me ſeveral ~~Rows~~ Acres of *St. Foin* with my *Wheat-Drill* two Years ago, the Rows being all fourteen Inches aſunder; it is now an extraordinary good Crop,

In caſe the Shares, being only three, ſhould in fine Ground, go ſo deep as to endanger the Burying of the Seed, the beſt Remedy to prevent this fatal Misfortune, is to place a triangular Piece of Wood, like thoſe in *Figures* 25 and 26. The firſt of which ſhews one Side thereof, with the Nail by which it is to be nail'd into the lower Part of the Trunk, with its moſt acute Angle uppermoſt; the other in *Fig.* 26. ſhews the ſame, and its Back-Side a b, that is to be nail'd to the Back of the Sheat, being of the ſame Breadth with it; its Bottom b c being the Breadth of the Plates, on their Inſide, the Angle c coming out backwards, juſt as far as the Plates; the Depth of this Piece from a to c is uncertain, becauſe the Plates of ſome Trunks are broader than of others. The Uſe of this Piece is to fill up the lower Part of the Trunk; ſo that the Seed dropping upon the oblique Side of this Piece of Wood, may by it be turn'd into the Channel, after ſo much Mould is fallen into it, as will ſufficiently leſſen its Depth, whereby the Danger of burying the Seed is avoided: And ſuch a Piece of Wood placed into each Trunk, I think, is preferable to

Ground-Wrists, which are commonly used for this Purpose; because the Ground-Wrists leave the Channels too wide and open.

But when only the two hinder Sheats are used for *St. Foin*, we can make their Channels the shallower, by sinking the Limbers by their Chain, so much as that the *Plow* bearing most upon the fore Share, the hinder Shares will go the shallower.

When we drill hilly Ground, both up and down, we cover the hinder Parts of all the Trunks, from their Tops, to within two or three Inches of the Ground, to prevent the Seed's falling out far behind the Trunk, in going up Hill; and this we do either by a Piece of Leather nail'd to each Side of a Sheat, the Middle of the Leather bearing against the hinder Part of the Plates (or Trunk); or sometimes instead of Leather we use Tin.

Every Trunk being thus enclos'd behind, we can drill up and down a Hill of a moderate Ascent; but when it is very steep, we never drill any Thing but *St. Foin* on it, and that by a *Drill* made for the Purpose, so very light, that a Man may carry it up the Hill at his Back, and draw it down after him: This *Drill* has five or six Sheats in one Row (with the *Harrow* behind them). Their Shares being extremely short, the Standards which draw the *Hopper* must be set perpendicular to the Horizon, when the *Drill* is coming down, rather than to the Surface of the Side of the Hill; the Funnels must also correspond with the Standards.

Some, instead of these Sheats, make use of hollow wooden *Harrow-Tines*, thro' which the Seed descends: But these I do not approve of; because where the Ground is hard, and not fine, they rise up, and make no Channels for the Seed, and then it lying uncover'd will be malted.

When a *Drill* has only one Rank of Shares, we screw on the *Harrow* by its Legs, to the Insides of the two outside Sheats, as near as we can to their fore Shoulders, leaving sufficient Room for the *Harrow* to rise and sink, in the same Manner as when it is drawn by the Beams.

CHAP. XXIV.

Of the *Turnep-Drill.*

PLATE 5, shews the whole Mounting of a *Turnep-Drill*. *Fig.* 1. is a *Plow* but little differing from the *Drill-Plow* last mention'd. A, A are the two Limbers, differing in nothing from the other, except that they are lighter, not being above two Inches diameter, behind the Bar; they are drawn in the same Manner as the other. Their Bar B is distant from the Plank three Inches, being shoulder'd at each End, with a very thin flat Tenon, passing thro' each Limber, and pinn'd on their Outsides as at a a. We do not pin in this Bar thro' the Limbers, lest the Holes should make these very small Limbers the weaker in that Part. C, the Plank, two Foot and an Inch long, five Inches broad, and an Inch and

a

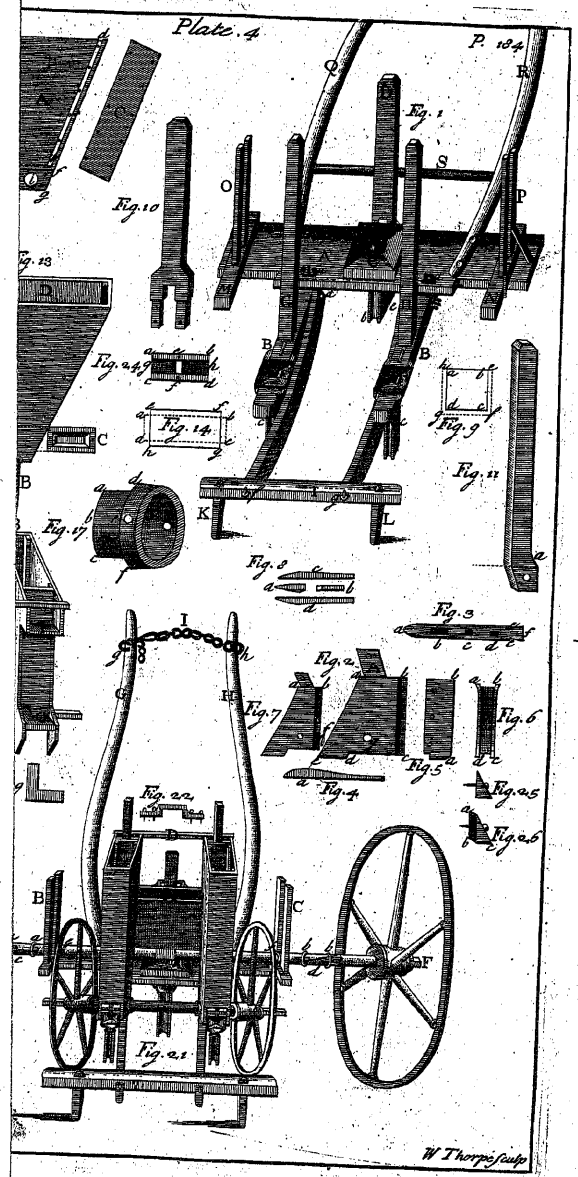

urpoſe; becauſe the

or *St. Foin*, we can
ıbers by their Chain,
e Share, the hinder

we cover the hinder
two or three Inches
r behind the Trunk,
of Leather nail'd to
bearing againſt the
ıſtead of Leather we

drill up and down a
, we never drill any
for the Purpoſe, ſo
is Back, and draw it
n one Row (with the
ſhort, the Standards
the Horizon, when
of the Side of the
ıdards.
ow wooden *Harrow*-
not approve of; be-
iſe up, and make no
rill be malted.
Screw on the *Harrow*
as near as we can to
Harrow to riſe and
e *Beams*.

ıep-Drill. *Fig.* 1. is
lt mention'd. A, A
e other, except that
er, behind the Bar;
heir Bar B is diſtant
h End, with a very
r'd on their Outſides
ıbers, left the Holes
that Part. C, the
ıd, and an Inch and
a

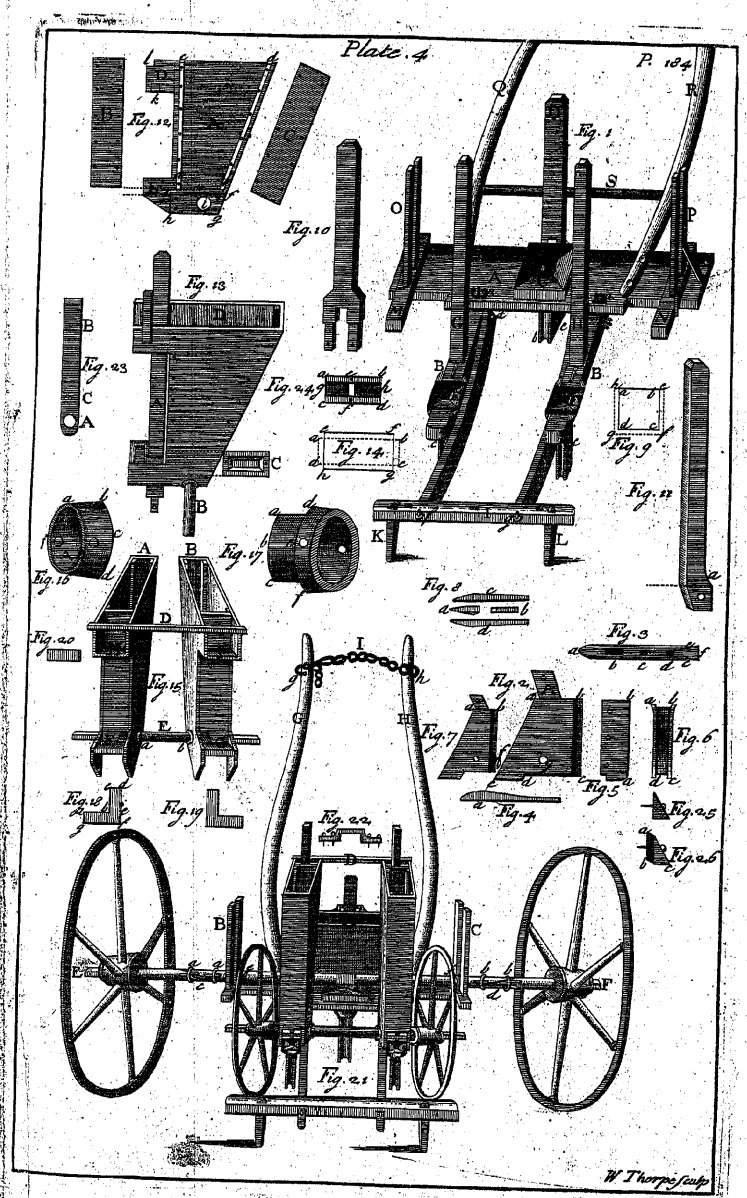

a Quarter thick. D, D, the two double Standards, or two Pair of Standards, placed into the Plank with Shoulders above, and Tenons pinn'd underneath the Plank, and are thirteen Inches high above it: These serve for a Pair of Marking Wheels, when Turneps are drill'd on the Level, to keep the Rows all parallel, and at what Distance you please, by setting them according to the Rule already laid down.

Sometimes we place the double Standards into the Plank of the *Wheat-Drill*, in the same Manner that these are placed.

We take off the inner Edge of each Standard at the Top, as at b b and b b, for the more easy Admission of the Spindle of the Marking Wheels ~~in~~ the Forks: This Spindle is kept in its Place by two of the same Sort of Wreaths, and placed in the same Manner as those describ'd for the fore *Hopper* of the *Wheat-Drill*. into

Such Marking Wheels are necessary for drilling upon the Level; but not for drilling upon Ridges.

E is the Beam, two Foot two Inches and a Half long, four Inches broad, and two Inches thick; it is thus broad, that the Screws which hold on the cross Piece F, may be the farther asunder: The Screws must be placed as near as may be to the Outsides of the Beam, and at equal Distance from each Side of the cross Piece, by which Means the Standards are kept the firmer from Turning.

The Distance between the Plank and the cross Piece is eleven Inches, the Breadth of the cross Piece is two Inches and a Quarter. This cross Piece is shewn a-part in *Fig.* 2. where its two Standards A, B are each seventeen Inches long (or high), and each on its fore Side and hinder Side one Inch and a Quarter broad, and nearly three Quarters of an Inch thick; they are shoulder'd and pinn'd into the cross Piece at a b. The cross Piece is thirteen Inches and a Half long, and one Inch and a Quarter thick in the Middle from c to d; but for about an Inch on the Inside of each Standard is two Inches and a Half thick, that the Standards may have the more Wood to support them, and that the *Hopper* bearing upon the thicker Parts of the cross Piece may be held up above the Funnel, that the Fork of the brass Spindle may not strike against it, when the *Plow* is taken up to be turn'd, there being a little more than a Quarter of an Inch of the Breadth of the cross Piece behind the Standard, for the *Hopper* to rest on.

The whole Distance between the Standards, is nine Inches and a Quarter. The Standards must be exactly perpendicular to their cross Piece: Their Tops are drawn up each to a Point, as at e and f, by which the *Hopper* is the more easily put on upon them.

The Funnel, Sheat, Share, and Trunk, are the same of those in the *Wheat-Drill*, except a few Differences. As G in *Fig.* 1. is the same of the fore Sheat of the *Wheat-Drill*, with its Accoutrements, only it is lower, being but eight Inches high from the Bottom of the Share up to the Beam, and the Plates of the Trunk are somewhat narrower; its Tenon passes thro' the Beam, and comes up above it, betwixt the Funnel and the cross Piece, and there is pinn'd in thro' its Hole above the Beam. There is no Want of Wood behind the Sheat, the Funnel not being cut in the Beam, but placed upon it.

The Funnel is shewn a-part in *Fig.* 3. and is two Inches deep, four Inches square at Top; its four ~~Inches~~ terminating at a Hole in the Bottom, half Sides

half an Inch broad from a to b, and near an Inch long from c to d, which Length is divided in the Middle, by the upper Edge of a brafs Spout, which divides the Hole into two equal Parts (or Holes), each of which is about half an Inch fquare. This Funnel being fcrew'd on upon the Beam by two Wood Screws, entring at two oppofite Corners of the Funnel, as at c d in *Fig.* 1. fo that the Seed may drop from the *Seed-Box* upon the right Side of the Funnel at e, which being about half an Inch diftant from the Partition, and equidiftant from both Holes, the Seed rebounding is pretty equally diftributed to each of the Holes.

The fore Part of the foremoft Hole, being equal with the Back of the Sheat, the Beam being cut thro'; fo that the Back of the Sheat, and the fore Part of the Hole thro' the Beam, and the fore Part of this Hole, make one plane Surface, whereby the Seed that falls into this foremoft Hole, defcends to the Ground, near the Back of the Sheat, thro' the Trunk.

And the Seed which falls into the hinder Hole, is convey'd obliquely backwards thro' Part of the Beam, by a fhort thin brafs Spout, whofe Diameter in the Infide is fomewhat more than half an Inch; but the fore Part of it, which divides the two Holes, defcends firft perpendicularly half an Inch, and then turns off backwards, and there the Spout begins to be round; its Joining is on its hinder Part, to the end that the Seed never running upon it, cannot be ftop'd by it. The lower End of this Spout, ends at the lower Surface of the Beam, a little behind the Plates of the Trunk, which Hole is feen at a in *Fig.* 4. where this Hole delivers the Seed down into the Spout A, when it is drawn up into its Place by the String B drawn thro' the Hole at b in the End of the Beam, and there tyed until it ftand in the Pofture in which it is feen at f in *Fig.* 1.

The Shape of this Spout is better feen in *Fig.* 5. where A is the Spout, four Inches long, a full Inch diameter in the Infide; its lower End is circular, but its upper End B is cut at oblique Angles, fo that when it is drawn up to its Place, its Edges will touch the lower Surface of the Beam, and enclofe the lower End of the other Spout within it; it is made of thin hammer'd Brafs (as is the other.) The Edges of the Piece of Brafs which make this Spout, are join'd on its hinder Part, for the fame Reafon that they are fo in the other Spout. At b there is a Jag cut in one of thefe Edges, and rais'd upwards, by which Jag the String being tyed on the Spout juft below, is hindred from flipping upwards.

Joining to the higheft Part, and made with Part of the fame Piece o Brafs, turn'd back from the End of the Spout, is its Hinge C, near three Quarters of an Inch long in its Hollow.

D is a thin Piece of Iron, half an Inch broad, and a little longer than the Top of the Sheat, by which the Spout is held up; this Piece of Iron is riveted by a Rivet paffing thro' a Hole at c, and thro' the Sheat, juft before the Trunk, and thro' another Piece of Iron on the oppofite Side; both the Pieces of Iron, with their upper Edges touching the Beam, being thus riveted to the Sheat.

The Spout is pinned in by the Screw E, paffing as by the prick'd Line F thro' the Hole G, and alfo thro' the Hinge C, and fcrew'd into the Hole of the oppofite Piece of Iron, correfponding with the Hole G; and then it will appear as in *Fig.* 4.

Inftead

Inftead of thefe Pieces of Iron, we fometimes ufe Pieces of Wood, a little broader and thicker, nail'd on the Sheat.

The Ufe of this Spout is for carrying half of the Seed backwards, fo that it may drop upon the Channel, after the Earth is fallen into it; by this means the Seed lying very fhallow, being only cover'd by a little Earth rais'd by the *Harrow*, by its Shallownefs comes up in moift Weather, fooner than the other Half, which lies deeper in the Ground; but if the Weather be dry when planted, the deeper Half, by the Moifture of the Earth from the Dews, will come up firft, and the fhallow Half will not come up 'till Rain come to moiften it; fo that by the fhallow or deep, the Turnep-Fly is generally difappointed.

Fig. 6. Shews one of the Tines of a *Drill-Harrow* made of Wood: Its Edge a b is made roundifh at b, by which means it raifes the Earth on its Sides; but does not drive it before: This Edge from a to b is fix Inches long; from b to c, being its Bottom, is one Inch and a Quarter; from c to d is the Back, an Inch and a Half thick at Top, gradually tapering downwards to c, where it is half an Inch thick, being fhoulder'd all round: It has a flat Tenon A, which paffes thro' a *Mortife* in the *Harrow-Head*; the Length of which *Mortife* is parallel with the Length of the *Harrow-Head*, into which it is held by a Pin, paffing thro' the Hole of the Tenon, above the *Harrow*; as may be feen in *Fig.* 7. at a; and its Fellow at b.

Thefe two Tines are eight Inches afunder at their Points, and fix Inches and a Quarter afunder at their upper Parts, juft under the *Harrow-Head.* The fore Edge of the Tine A inclines a little to the Left, as the Edge of the Tine B doth to the Right.

Fig. 8. Shews one of the Legs of the *Harrow.* At a is feen the round Tenon, which paffes thro' the *Harrow-Head* up to its Shoulder, and is pinned in thro' a Hole of the Tenon juft behind the *Harrow-Head*; upon this Tenon the *Harrow-Head* may turn: The other End has a Hole at b, thro' which it is pinned on to the Beam. The Length of the Leg from the Shoulder at a, to the Hole at b, is twenty Inches. Its Thicknefs is an Inch and a Quarter, and its Breadth an Inch. The two Legs are feen mark'd C, D, in *Fig.* 7. They bend down in the Middle, to give the *Harrow* the more Room for rifing and finking; they are parallel to each other, and diftant a little more than the Breadth of the Beam, that they may have Liberty to move thereon, when one End of the *Harrow-Head* finks lower than the other, by the Unevennefs of the Ground.

The *Harrow* is pinned on to the Beam by the iron Pin *Fig.* 9. paffing thro' the Hole of the Leg at g, and thro' the Beam, and alfo thro' the other Leg on the other Side of the Beam, where the Screw at the End of the Pin has a Nut fcrew'd on it. This Pin is round from its Head all the Way thro' the firft *Harrow-Leg*, and thro' the Beam; but all that Part of the Pin which is in that Leg againft which the Nut is fcrew'd, muft be fquare, whereby that Part being bigger than the round Part of the Pin, and than the Hole in the laft mention'd Leg, cannot turn in the Hole of that Leg; for if it did, the Nut would be foon unfcrew'd by the Motion of the *Harrow*; but the Pin muft have Room to turn in the other Leg, and in the Beam. This fquare Part of the Pin is feen at a, *Fig.* 9. The whole Length of the Pin, from its Head to the End of the fquare Part

at a, where the Screw begins, is of the Thickness of the two Legs, and of the Breadth of the Beam.

We sometimes set the Legs of the *Harrow* two Inches wider asunder, by making them each an Inch thicker at their fore Ends in their Inside, and reaching five or six Inches behind their iron Pin; these thicker Parts bearing against the Beam, keep the hinder Part of each *Harrow-Leg* an Inch distant from the Sides of the Beam, whereby the *Harrow-Legs* are six Inches asunder, instead of four, by means of these added Thicknesses.

When a *Drill* is taken up to be turn'd, the Person that does it, takes hold of the *Harrow-Head*, and lifts it up; the Legs of the *Harrow* bearing against the cross Piece, support the whole Weight of the *Drill*.

When the *Harrow* does not go deep enough, we tye a Stone upon the Middle of the *Harrow-Head*, by a String that passes thro' the Holes at h. All the Wood of this *Plow* and *Harrow* is Ash, except the Limbers.

The *Hopper* of the *Turnep-Drill* is very different from those already described: It consists of a Box placed into the Middle of a Carriage; which Box is described in all its Parts, lying open with their Insides upwards in *Fig.* 10. A is the fore Side of the Box, five Inches and a Half deep, and six Inches and a Half long. B, the hinder Side of the Box, opposite to the former, and of equal Dimensions.

Each End of the Box is made with three Pieces of Board, of which, C the uppermost is three Inches and a Quarter deep, and five Inches long, which Length is the Breadth of the Inside of the Box. The End of the Piece C, when in its Place, stands against the prick'd Line a b in the fore Side A. The other End standing against the prick'd Lines in B, which is opposite to, and corresponds with the prick'd Line a b. The fore Side, and hinder Side, being screw'd to the Ends of this Piece by four Screws.

The Piece D is two Inches and a Quarter broad, and of the same Length with the Piece C, and screw'd up to the Bottom of it with two Screws; and then its End will bear against the prick'd Line b c, and that which is opposite to it in the Side B.

E Is the lower Piece of this End, and an Inch and a Quarter broad; its End is to stand against the prick'd Line c d, and its other End at the opposite prick'd Line in B. The Piece D must be screw'd upon the upper Edge of the Piece E, as the Bottom F must be screw'd up to its under Edge, which will stand upon the prick'd Line e f. The three Pieces G, H, I, being opposite to C, D, E, and of the same Dimensions with them, placed in the same Manner, make the other End of this Box. At g in the Bottom F, appears the Hole which is over the *Mortise* of the brass *Seed-Box*, the Shape and Size of which Hole may be seen by the prick'd Lines upon the Flanches B, C, of *Fig.* 9. in *Plate* 2. The foremost End of which Hole, reaches almost as far forwards as the End of the Axis of the Tongue of the brass *Seed-Box*, and its hinder End almost as far as the hinder End of its Cover. The Bottom F, being of the same Length with C, D, E, and their Opposites, bears against the prick'd Line d h of the fore Side A, and against the opposite prick'd Line of B. The Length of this Bottom F is the Breadth of the Inside of the Box, and its Breadth reaches to the outer Edges of the Pieces E and I, being three Inches and a Half.

All

All the Jointings of these Pieces must be at right Angles, and so close that no Seed may run out at them. All the Pieces are of Board, full half-inch thick, except the Bottom, which is thinner.

Fig. 11. Shews the Bottom of the Box with its under Side uppermost; where the light Part A is the bottom Board, covering the two End-Boards E and I, in *Fig.* 10. The dark Parts B and C are the under Sides of D and H, in *Fig.* 10. At a is the fore End of the brass *Seed-Box* screw'd up to this bottom Board. At b is the hinder End of the brass *Seed-Box* screw'd up in like Manner, the outer Edge of the Flanch of the *Seed-Box* being even with the Edge of the bottom Board; the End of the brass Spindle, with its Fork, appears at C.

Fig. 12. Shews this Box standing upon its Bottom, with its hinder Side laid open. At a is the Hole in the Bottom, under which the brass *Seed-Box* is fasten'd, with small iron Screws, square near the Heads, passing thro' the Bottom, and thro' the Holes at each End of the brass Box, with their Nuts underneath. The Pins must touch all the Sides of the Holes in the Brass, to prevent the *Seed-Box* from moving any Way.

A is the fore Side of the Box. B the hinder Side lying down. C is the Piece H of *Fig.* 10. which makes a Sort of Shelf in the Box at its left End. D at the right End, makes another like Shelf, underneath which, the Fork of the brass Spindle is turn'd by the Crank in the End of the wooden (false) Spindle. By means of these Shelves, there is Room for the two wooden false Spindles to come the further into the Carriage, without lessening the upper Part of the Box. E and F are the two Ends of the upper Part of the Box, made by the two Pieces G and C of *Fig.* 10. When the hinder Side B is rais'd up and screw'd to these Ends, the Box is compleat.

We put a Lid upon this Box, which is hing'd on to its right or left End. This Box (having the brass *Seed-Box* at its Bottom) is to be placed into the Middle of a Frame or Carriage.

Fig. 13. Shews the Inside of the Carriage lying down. A is the hinder Side, eighteen Inches long, Dove-Tails and all, and six Inches broad. B the fore Side, of the same Length with the hinder Side, and eleven Inches broad; this five Inches greater Breadth than the hinder Part is, because a greater Height is required on the fore Side, on account of the *Hopper*'s being drawn, and the *Plow* held up by that and the Pieces that must be fix'd to it. C, D are its two Ends, six Inches long, besides their Dove-Tails, and six Inches broad. E and F are two Pieces each six Inches long, whose Ends are to stand against the prick'd Lines a b and c d of the hinder Side, and their other Ends against the prick'd Lines in the fore Side, which are opposite to these. The Breadth of each of these Pieces is four Inches; when they are in their Places, their lower Edges come even with the Bottom of the Carriage. Their Use is to support the Ends of the Spindles which come just thro' their Holes, after each of them have passed their Hole at its respective End of the Carriage.

All this Carriage is made of Board full half-inch thick: The Ends C and D are made of double Thickness by another Piece of Board added to each, that covers all their Insides, except their Dove-Tails. These Boards with which they are lin'd, are nail'd to them, with their Grain going a different Way, and crossing the Grain of the Board of the End, either

either at right or oblique Angles. This prevents the Holes from ſplitting out, and makes the Holes of a double Thickneſs, whereby the Spindle is the leſs worn by them, in caſe there are no braſs Wreaths to enter them.

The middle Pieces E and F are lin'd by their whole Surfaces, in the ſame Manner as the Inſides of the Ends are lin'd.

When theſe Ends and middle Pieces are in their Places, a wooden Cylinder of the exact Diameter of the Holes, is thruſt thro' all four, to hold them exactly true, whilſt the Ends and middle Pieces are all ſcrew'd faſt into their Places.

The prick'd Lines are drawn all round the Carriage, thro' the Centers of the Holes, and at equal Diſtance from the Bottom of the Carriage, which is an Inch and three Quarters and the one Eighth of an Inch. This prick'd Line is a Direction how high to nail on the Ledgers G and H, whereon the Box is to ſtand; and the Diſtance the upper Surface of the Ledger muſt be above the prick'd Line, is the Semi-Diameter of the braſs Spindle; and the Thickneſs of the braſs Box above the Spindle, or which is the ſame Thing, the Diſtance between the Center of the great Hole of the braſs *Seed-Box*, and the Plane of the Top of its *Mortiſe*, being half an Inch and half a Quarter, ſtrike a Line above the prick'd Line parallel to it, at this Diſtance above, and then nail on the Ledger, with its upper Edge at this Line. This with its oppoſite Ledger plac'd in the ſame Manner, will ſupport the Box with the Axis of the Spindle of the *Seed-Box*, at equal Height with the Centers of the Holes of the Carriage; ſo that if thoſe Holes are parallel to, and equidiſtant from the fore Side and hinder Side of the Carriage, and the Axis of the braſs Spindle be plac'd in the like Manner parallel to, and equidiſtant from the fore Side and hinder Side of the Box; then when the Box is thruſt down in its Place upon theſe Ledgers, and the wooden (falſe) Spindles are plac'd into their Holes, their Axes will fall into a ſtreight Line with the Axis of the braſs Spindle, as they ought.

Fig. 14. Shews the Carriage laid open. A is its back Side lying down. B is its fore Side ſtanding up. C is the ſquare End of the left (falſe) Spindle, whereon a Wheel is to be put up to the Shoulders of the Spindle, quite cloſe to the Ends of the Carriage. This Spindle being an Inch and a Half diameter, is held in its Place, and kept from moving end-ways by two Wreaths; the one at a, bearing againſt the Inſide of the End of the Carriage, the other Wreath at b, bearing againſt the left Side of the middle Piece; which Wreath keeps the Spindle from moving towards the right Hand, as the other does from moving towards the left. D is the ſquare End of the other wooden Spindle, whereon a Wheel muſt be placed in the ſame Manner as the other Wheel. This Spindle is kept from moving end-ways by two Wreaths, in the ſame Manner as the other Spindle is; but this right-hand Spindle, being that which turns the braſs Spindle by its Crank, which enters the Fork, ſhould have its Wreaths of Braſs, like thoſe deſcrib'd in *Fig.* 17. *Plate* 4. Part of which Wreaths entring about three Quarters of an Inch into the Hole of the End and middle Part of the Carriage, being firmly ſcrew'd on to the Spindle, prevent the Friction that would otherwiſe be betwixt the Wood of the Spindle and the Wood of the Holes; which Friction wearing the Wood of both, would in Time cauſe the Spindle to be looſe in its Holes, whereby its

its Axis would deviate from the ſtreight Line it ſhould make with the Axis of the braſs Spindle, and make an Angle with it, and then the Crank would change its Place in the Fork at every Revolution of the Wheels; and if the Hole ſhould be worn very wide, and the Spindle worn much leſs, the Crank might let go the Fork; but when the Wood is of this Thickneſs, and each Hole has Wood in it, with its Grains pointing different Ways, it would be many Years before the Holes would become large enough for this to happen, tho' only wooden Wreaths were uſed; and as to the two Wreaths of the left Spindle, they may be of Wood, becauſe tho' that Spindle ſhould grow looſe, it is no Damage, for it only ſerves to bear up that End of the Carriage; but he that has this Sort of braſs Wreaths for the hinder *Hopper* of a *Wheat-Drill*, may take them thence, and place them upon theſe Spindles, and remove them again to the *Wheat-Drill* when that is uſed, for that and the *Turnep-Drill* are very rarely, or never, uſed at the ſame Time.

E. Is the iron Crank, plac'd into the falſe Spindle, in the Manner ſhewn at H in *Fig.* 5. of *Plate* 2. for turning the braſs Spindle by its Fork; but take Care that the End of this wooden Spindle, do not approach nearer to the End of the braſs Spindle than the Diſtance of half an Inch, leſt if the inner Wreath ſhould grow looſe, the wooden Spindle might bear ſo hard againſt the braſs one, as to wrench the *Seed-Box* down from the Wood, and then the Seed might run out betwixt the *Seed-Box* and the Bottom to which it is ſcrew'd.

When the hinder Side A is ſcrew'd up againſt the Ends and middle Pieces, then the Box deſcrib'd, being thruſt down into the Carriage, and ſtanding upon the deſcrib'd Ledgers, and at that Diſtance from each End of the Carriage, that the Seed may drop on the Side of the Funnel, as is before deſcrib'd; the Box is kept in its Place by one Screw paſſing thro' its Back, and the back Side of the Carriage.

The Notch F is cut in the Bottom of the hinder Side of the Carriage, up to the Bottom of the Ledger, for the Convenience of ſeeing the Seed drop into the Funnel.

The round Notch G is made in the Bottom of the fore Side of the Carriage, to make Room for one's Hand to go in there, and turn the *Setting-Screw* without taking off the *Hopper* from the Standards.

This Box and Carriage, ſo fix'd together, compoſe the *Turnep-Hopper*, which is drawn, and guided, and alſo holds up the *Plow* by two hollow Pieces of Wood ſcrew'd on to the Outſide of the fore Part of the Carriage; their Ends H and I appearing a little above the Carriage.

One of theſe hollow Pieces of Wood is ſhewn in *Fig.* 15. The Breadth of its Hollow muſt conform to the Breadth of the Standards, which are one Inch and a Quarter broad; but we muſt allow about a Quarter of an Inch more in the Hollow for Swelling of the Wood. The Depth of the Hollow muſt be the Thickneſs of the Standard that is to go in it, allowing about the Eighth of an Inch for Swelling of the Wood. The Hollow ſhould be a little deeper in the Middle than at each End; becauſe the Standard ought not to bear againſt any Thing, except at, or near, the upper and lower Part of the Carriage. Altho' the End of theſe Pieces come a little higher than the Carriage in this *Hopper*, yet I think it is better that theſe hollow Pieces come no higher than even with the Top, nor deſcend any lower than even with the Bottom of the Carriage, and

 then

then the Length of each of these Pieces need be no more than eleven Inches, which is the whole Depth of the Carriage.

The Wood on each Side of the Hollow, sufficient for the Holes a, a, a, a, must be about half an Inch broad. The best Way for fixing them on, is whilst the Standards are in them, placing a small Piece of Wood at each Corner of the Hollow, betwixt the Standard and the Wood, to the end that there may be no more Room on one Side of a Standard than on the other Side; then screw them on (parallel to and equididistant from their respective Ends of the Carriage) by four small Screws each, the one at c, c, c, c, and the other at d, d, with two below; the Heads of these Screws being on the Inside of the Carriage, and their Nuts on the Outsides of the hollow Pieces; then pull out those little Pieces of Wood, that were to keep the Standards in the Middle of the Hollows, whilst the Holes for the Screws were bored, and then the *Turnep-Hopper* is finished, and being put on upon the Standards A, B, in *Fig.* 16. is ready to go to Work; and in this Figure the whole *Turnep-Drill* may be seen as in the Prospect of a Person following it at Work, except that this Figure has not the double Standards nor Marking Wheels; because we never use them for drilling Turneps, except it be on the Level, which we very rarely do.

The Circles of the Wheels of this *Hopper* go twenty five Inches asunder; were they farther asunder, they would not go so well upon the Ridges; or were they nearer together, they might not hold up the *Plow* so steadily, but that one Wheel might happen to be rais'd from the Ground, by the descending of the opposite Limber; and if it should happen to be the Wheel that turns the Crank, no Seed would be deliver'd out whilst the Wheel was rais'd above the Ground; sometimes we use Wheels of twenty six Inches diameter, sometimes thirty, and at intermediate Diameters, with this *Hopper*.

The best Wood for making all Sorts of *Hoppers* is Walnut-Tree or Elm: Our Beams and Standards we make of Ash.

What is meant by Wood Screws, are taper Screws made with Iron, having very deep Threads, whereby they hold fast when screw'd into Wood, and their Points will enter into soft Wood without boring any Hole for them into the Wood they are to take hold of; but near their Heads they are round, and have no Thread, and that Part of them must always be in a bor'd Hole thro' that Part of a Board that is to be drawn close.

If the Standards should be much swollen by being wet, it may be proper to anoint them with Soap.

In drilling, when the Wind is very strong, and the *Hopper* goes high above the Funnel, the Seed might be blown over it, if we did not take Care to guard it from the Force of the Wind; and for doing this there are many Ways: Sometimes we nail a Piece of Linnen Cloth round the Ends, and the fore Side of the *Hopper*, or else we nail on a Piece of old Hat, or Shoe-Leather, round the Edges of the Funnel, to raise it higher; or if the *Hopper* go a great deal above the Trunk, we nail up a Pipe of Leather to the wooden Bottom of the Box, which Pipe being about an Inch wide at Bottom, protects the Seed from the Wind, till it arrives so near the Funnel that the Wind cannot blow it over.

If

be no more than eleven
ge.
fficient for the Holes a, a,
best Way for fixing them
ng a small Piece of Wood
ndard and the Wood, to
e Side of a Standard than
to and equididistant from
nall Screws each, the one
below; the Heads of these
d their Nuts on the Out-
ittle Pieces of Wood, that
f the Hollows, whilst the
Turnep-Hopper is finished,
Fig. 16. is ready to go to
Drill may be seen as in the
except that this Figure has
ls; because we never use
the Level, which we very

twenty five Inches asunder;
so well upon the Ridges;
old up the *Plow* so steadily,
from the Ground, by the
t should happen to be the
be deliver'd out whilst the
s we use Wheels of twenty
termediate Diameters, with

ers is Walnut-Tree or Elm:

er Screws made with Iron,
d fast when screw'd into
Wood without boring any
e hold of; but near their
d that Part of them must
Board that is to be drawn

being wet, it may be pro-

, and the *Hopper* goes
wn over it, if we did not
Wind; and for doing this
Piece of Linnen Cloth
er, or else we nail on a
Edges of the Funnel, to
al above the Trunk, we
tom of the Box, which
tects the Seed from the
Wind cannot blow it over.

If

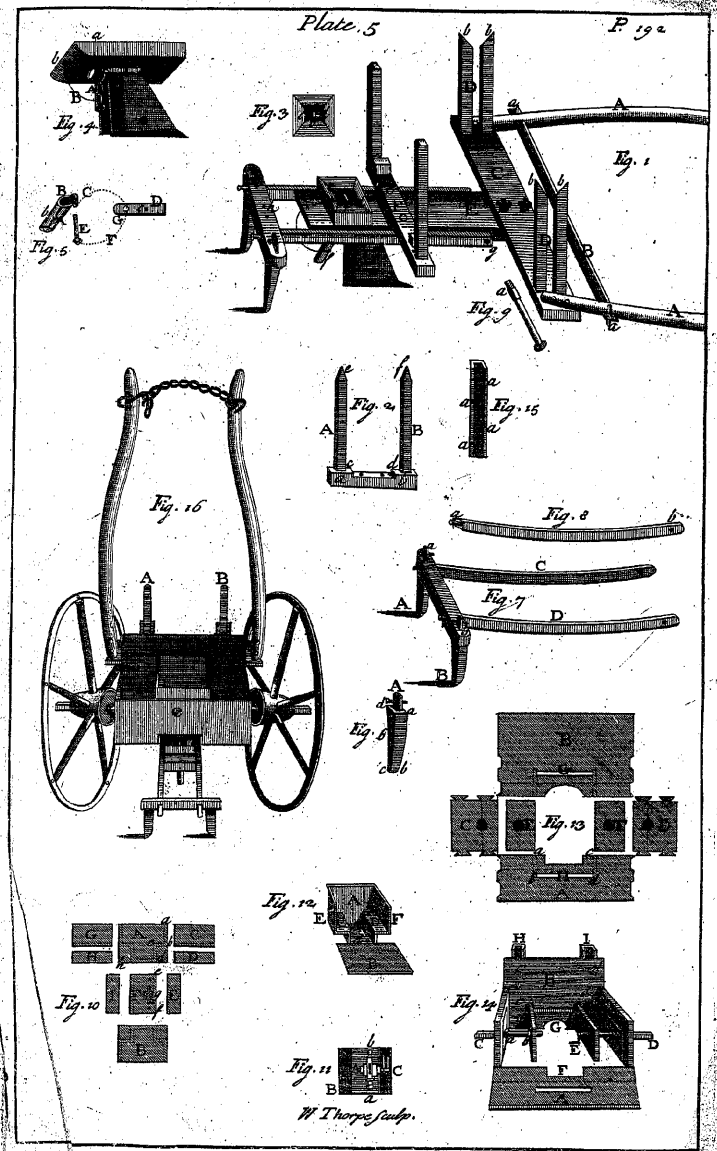

If we would have a long *Hopper*, to plant many Rows at once, of Clover or other fine Seeds, 'tis easy to make each of these wooden (false) Spindles turn two or three brass or iron Spindles; but then, as in all other Cases, where the same *Hopper* is to supply more than one Channel with Seed, each of its Wheels must have Liberty to rise without the other, as those of the hinder *Hopper* of the *Wheat-Drill* do.

CHAP. XXV.

Of the *Ho-Plow*, &c.

PLATE 6. *Fig.* 1. Is the *Ho-Plow* in a side View. A is the Beam and *Plow-Tail*, being much the same with that of the common *Plow* describ'd in *Fig.* 1. of *Plate* 1. The Beam of such a common *Plow* being cut off, and screw'd up to this Plank, and its Limbers, might make a *Ho-Plow*. The Share of this, from its Tail to the fore Part of its Socket, is two Foot one Inch long, and from thence to the End of the Point, ten Inches and a Half: This is the Measure of the under Side of the Share. B is the Plank two Foot seven Inches and a Half long, two Inches and a Half thick, and nine Inches broad. C, D, are the Nuts of the two Screw-Pins, which hold up the Beam to the Plank. E is the Nut of the Draw-Pin, which Pin has a Crook underneath, whereto one of the Links of the short Chain of the Whipper is fasten'd for drawing the *Plow*; the only Use of this Nut, is to hold the Pin from dropping out by its own Weight, and that of the Chain and Whipper; but often, to avoid the Trouble of screwing and unscrewing the Nut, we supply its Use by a square Pin a little bigger than the Hole, which we drive up by a Hammer, so tight, that it may not drop out of itself; but can easily be driven out by a few Blows of the Hammer, as often as 'tis necessary to remove it into another Hole. F, G are the two Limbers; they are screw'd on to the Plank by four Screws and Nuts: The under Surface of the Limbers by their whole Length are parallel to the Plank, and to the upper Surface of the fore End of the Beam, contrary to the Manner of placing the Limbers of the *Drill-Plows*; because their Planks being always parallel to the Bottom of their Shares, if their Limbers were parallel to their Beams, as these are, the fore Ends of their Limbers would not be elevated higher than the Plank, but would go within a Foot of the Ground, instead of being elevated almost as high as the Horses that draw them; and the upper and under Surfaces of this Plank must not be parallel to the Share, but must make the same Angle with it as its Limbers and Beam do.

These Limbers ought to crook outwards from each other all the Way, 'till they come within about a Foot of the Chain, much more than the *Drill* Limbers need to do; because the Middle of the Plank of the *Drill* follows directly after the Horse, but the Middle of the Plank of the

Ho-Plow

Ho-Plow very ſeldom does; and therefore there muſt be the more Room betwixt theſe Limbers. Likewiſe there muſt be the more Room betwixt the fore Part of the Limbers, becauſe oftentimes the right Limber muſt be rais'd, and the left depreſs'd, in holding the *Plow* towards the left Side, (for if it ſhould be held towards the right Side, the Share would go upon the Fin, and its Point be raiſed out of the Ground, unleſs it were on a Surface that had a Declivity towards the Right.) The Diſtance between the fore Ends of theſe Limbers is two Foot eight Inches.

The Strength and Stiffneſs of theſe Limbers muſt be ſuch, that there may be no Bending betwixt their fore Ends and the Tail of the Beam; for if they be too weak, ſo as to yield to the Weight of the Furrow, the Point of the Share will deſcend into the Ground, and its Tail will riſe up, and then the *Plow* cannot go well. The ſhorter they are, the ſtronger and ſtiffer will they be, of the ſame Thickneſs. We may make them juſt of ſuch a Length, that there may be Room for the Horſe before the Bar H (which holds the Limbers at their due Diſtance). Theſe are from their Ends to the Bar, four Foot ten Inches long, and from thence to the Plank ten Inches, and three Inches and a Half ſquare at the Bar.

I Is the Whipper. K, L, are its Notches, whereunto the Traces both of the Thiller, and of the Horſe next before him, are faſten'd. The Length of the Whipper is uncertain; but when we hoe betwixt Rows, when the Plants are grown high, we make it as ſhort as it can be, without galling the Horſe's Legs by the Traces.

We ſet this *Plow* to go deeper or ſhallower by the Chain of the Limbers; the Changing of whoſe Links to the Crook M, has the ſame Effect as Changing the Pins to different Holes of the Crow-Staves of a common *Plow*.

Beam *Fig.* 2. Is the ~~Bottom~~ with its *Mortiſe*, and Holes; its Crooking down at the Tail is not very material, but it cauſes the hinder Sheat to be a little the ſhorter below the Beam, whereby it may be ſomething the lighter, and yet of the ſame Strength as if it were longer. Its whole Length is four Foot ten Inches: We make its Breadth and Thickneſs ſuch, that it may be as light as it can be without Bending. A is the *Mortiſe* thro' which the hinder Sheat paſſes. B is the *Mortiſe* for the fore Sheat, upon which it is pinn'd up. C is a Hole in the Beam, into which the End of the left Handle being driven, holds it from Moving, and is the beſt Manner of faſtening this Handle of a *Plow*. D, E are the Holes, thro' which the two Legs of the double Retch paſs, and are there held up by their Nuts. F is the Coulter-Hole. G is the hinder Hole by which the *Plow* is held up to the Plank. H and I are the two foremoſt Holes of the Beam, thro' one or the other of which paſſes the Pin which holds the Beam to the fore Part of the Plank. Theſe Holes muſt be made as near together as they can be, without Danger of ſplitting them into one another; to prevent which there are ſeveral Ways: The one is by driving in two ſquare Pins croſs the Beam, under the prick'd Line a b, before the Holes are bored, which will prevent the Grain of the Wood from being forced out of one Hole into the other; or theſe Holes may be plated with Iron above and below, which will have the ſame Effect, and then there need not be more than one Inch between Hole and Hole.

Fig.

Fig. 3. Is the Plank a-part, which by its Holes and prick'd Lines, ſhew the different Manner of placing the Beam. a, a, a, a, are the four Holes for ſcrewing down the Limbers to the Plank.

Suppoſing the Path of the Horſe to be a ſtreight Line, and the prick'd Line, h i (which is at right Angles with the Plank, and equidiſtant from each Limber) to go exactly over it, without making any Angle on either Side of it; then the Beam muſt be plac'd at right Angles with the Plank, to the end that the Share may go parallel to the Horſe-Path, excepting that very ſmall Inclination that its Point has to the left, ſhewn by the prick'd Lines in *Fig.* 1. of *Plate* 1. But this *Plow* ſeldom follows the Horſe in that Manner. The ſaid prick'd Line h i generally makes Angles with the Horſe-Path; elſe when the Beam ſtood near the left Limber, and the Draw-Pin near the right Limber in the Hole 9. (which it muſt do to keep the Share parallel to the Horſe-Path) the Weight of the right End of the Plank and its Limber would be too heavy for the right Hand of the Holder to manage, and if the Draw-Pin be removed (ſuppoſe) to Hole 7. the Parallelism of the Share with the Horſe-Path will be loſt, and the Point of the Share may be inclin'd too much towards the left; and when a Furrow is to be ~~plac'd~~ on the right Side of the Horſe-Path, the Beam muſt be removed nearer to the Middle of the Plank, and the Draw-Pin muſt be placed on the left Side of the Beam, ſuppoſe to the Hole 2. This will bring the greateſt Part of the Plank to the right Side of the Horſe-Path, and then the Share ſtanding at righe Angles with the Plank, will make a very large Angle with the Horſe-Path, and then the *Plow* will not perform at all. Therefore it being neceſſary that the Share always go parallel to the Horſe-Path, and often as neceſſary that the Plank go at oblique Angles to the Horſe-Path; it follows then that the Beam ſtand at oblique Angles with the Plank, to preſerve the Parallelism to the Horſe-Path, and this cannot be done but by the Holes which are ſhewn under the prick'd Lines which croſs the Plank. plow must

The Holes A, B, C are thoſe to one of which the Beam is ſcrew'd up by its Hole G, in *Fig.* 2. Theſe Holes are made as near to the hinder Edge of the Plank, as they can ſafely be, without Danger of tearing out; which is generally about an Inch diſtant from the ſaid Edge.

Every one of theſe Holes are anſwer'd by three others, near the fore Edge of the Plank, as the Hole B has at the fore Edge of the Plank, the Holes D, E, F. D, E belong to the Hole I of the Beam *Fig.* 2. Theſe two Holes are made as near together as they can be without breaking into one another. F anſwers the Hole H in *Fig.* 2. and is made between D and E, as near them as ſafely it can.

When the Beam is ſcrew'd up at B and F, and makes the ſame Angles with the Plank, as the prick'd Line ~~B C~~ doth; then the Draw-Pin ſtanding in the Hole 8 or 9. will bring the *Plow* ſo much to the left, that the Share will point too much towards the right; then remove the fore End of the Beam to the Hole D, and then the Beam will make the ſame Angle with the Plank as the prick'd Line e d, which may bring the Share to be parallel to the Horſe-Path nearly enough; but if the Draw-Pin ſhould be plac'd in the Hole 1. then the Plank would go ſo much on the right of the Horſe-Path, that the Share would point vaſtly too much towards the left, ſtanding in either of theſe two Poſitions; therefore the foremoſt Pin muſt be removed to the Hole E, and then the Beam being at the ſame Angles with the Plank as the prick'd Line BC.

Line f g, it may be parallel to the Horse-Path, or so nearly, that by removing the Draw-Pin one Hole, it may be made perfectly so.

Note, That tho' here are but nine Holes for the Draw-Pin, yet we usually make many more in our Planks, and sometimes by changing the Draw-Pin either Way into another Hole, tho' that Hole be but an Inch distant from the former, the Share is brought right without any Inconvenience.

The Holes A and C have each of them their opposite Holes which, (when the Beam is plac'd into either of the two) have the same Effect, for keeping the Share parallel to the Horse-Path, as the Hole B and its three opposite Holes have; and if either of the Holes belonging to A, B or C should not bring the Beam sufficiently oblique to the Plank, for the Share to be parallel to the Horse-Path, when the Draw-Pin is in some one particular Hole, then there may be another Hole bor'd before, on the right or left, for the fore Pin to pass thro' by the Hole H of the Beam *Fig.* 2. which will incline the Beam a little more to the right or left, as Occasion requires; and if none of all these be sufficient, the Plank may be turn'd the other Side upwards, and the Beam being fasten'd there by the hinder Screw into any one of those Holes, which were next to the fore Edge of the Plank before it was revers'd, there may be a new Set of Holes to answer the fore Pin, of which that which was a hinder Hole before the Plank was revers'd, may be one. These may set the Beam at different Angles from any of the first Holes; so that there may be at one End of the Plank six Systems of Holes, three on the one Side, and three on the other; and if we have a Mind to make yet more various Positions of the *Plow*, we may turn the Plank, End for End, and there make six different Systems of Holes.

But instead of turning the Plank, it would be better to have a fourth Hole in the Beam, standing as near to the hinder Hole as H doth to the fore Hole; to answer which fourth Hole, there may be two Holes in the Plank, one at each Side of the hinder Hole of every System at proper Distances, to set the *Plow* still at more different Angles with the Plank; and these, I believe, will be more convenient for the Purpose than the different Holes in the fore Part of the Plank, it being easier to remove the hinder Screw than the fore Screw; because if the Plank and Limbers are not held up by somebody, whilst the fore Pin is out, their Weight will wrench out the hinder Hole of the Plank by that Screw; but whilst the hinder Screw is out, there is no Need of holding up the Plank, because its Weight bearing upon the Beam, cannot injure the foremost Hole, whilst the Limbers bear upon the Horse. Upon this Account, I wonder we had not made the Holes, for changing the Position of the Beam, at the hinder Part of the Plank rather than the fore Part; which convinces me that new Instruments are seldom perfect in the Beginning.

We can also alter the Standing of the Beam, by cutting away the Wood on one Side of a Hole, and placing a Wedge on the opposite Side of the Pin.

The Holder may make some Alteration in the Going of the *Plow* by the Handles.

The Reason we never set the Beam on the right Half of the Plank, is that the *Plow* always turns its Furrow towards the right Hand; and the streight Side of the Share and the Coulter never go so near to a Row on

on the right Hand, by the Breadth of two Furrows, as it does to a Row on the left Hand.

If by the Drawing of the fore Horse or Horses, the *Plow* should bear too hard upon the Thiller, it may be help'd by making a Row of Holes near the hinder Side of the Plank, for the Draw-Pin, instead of those in the Middle; for the farther backwards the Draw-Pin is plac'd, the less will the Limbers bear on the Thiller, especially when drawn by more Horses than one; because the fore Horses draw the Limbers more downwards than the Thiller doth, as may be seen in *Fig.* 4.

Fig. 4. Shews the Manner how the *Ho-Plow* is drawn, and how the Traces are fix'd to it. The Traces of both Horses are fasten'd to the Notches of the Ends of the Whipper at a and b. The Traces of the Thiller by their fore Part are fasten'd to a Hook, or Ring, on the Wood of the Collar, as is usual for other Thillers, and the fore Part of the next Horse's Traces is fasten'd to his Collar in like Manner; but these Traces being twice as long as those of the Thiller, must be held up in the Middle by a Piece of Cord or Chain, as at c, where one End of it is fasten'd to the Trace, and passes over the Top of the Collar, behind one of the Hames, and before the other (to keep it from slipping backwards or forwards) its other End is fasten'd to the opposite Trace on the other Side, as this End is at c. This prevents the Chain from falling down, and getting under the Horse's Legs in turning; but beware that this String or Chain be not so short as to hold up the Traces higher than their streight Line; for that would press upon the Collar, and gall the Thiller, besides occasioning the *Plow* to be drawn too much upwards; for this Drawing of the fore Horse by a different Line from that of the Thiller, is a great Advantage for keeping the *Plow* the firmer into the Ground.

If there is another Horse, his Traces are fasten'd at the Collar of the second, in the same Manner as in drawing of a Waggon.

When we hoe betwixt Rows where the Plants are very high, as those of Turnep-Seed, which are much higher than the Horses, to turn a new Furrow up to the Row, when there is a Trench in the Middle of the Interval, where the Horses must go, we find it best to place the Beam by the Holes B and E, in *Fig.* 3. and the Draw-Pin near the left Limber, which brings the Tail of the *Plow* to the right Hand, and the fore Ends of the Limbers being towards the left, the End of the right Limber (by turning the Handles a little to the left) bears against the wooden Saddle at d, and cannot hitch into or take hold of any of the Plants to tear them. And that no Part of the Limber may take hold of any Plant, we make it very smooth from one End to the other, and cut off the Corner of the Plank equal with the Limber, that the Plants may slip by it without hanging in it, or being broken by it. The Whipper standing towards the left End of the Plank, its End b does not reach so far towards the right as to take hold of the Plants, its End a, being over the Interval where no Plants are; and to keep its right End the more out of Danger of hurting the Plants, we place the Hook of its Chain nearer towards this End, by which Means the left End, becoming heavier, sinks lower, and raises the right End higher, and the higher it is, the more secure the Plants will be from it; because they are held off by the Limber above.

This

This Way my Turnep-Seed has been ho'd, when one wou'd have thought it impossible for a *Plow* and Horses to go betwixt the Rows without destroying the Crop. Almost in this Manner we give our Wheat the last Hoing, to turn the Furrow a second Time towards the Row. When the Plants of the Rows are very high, the Driver must go in the next Interval, on the left of the *Plow*, and the Holder has a Cord, like the Reins of a Bridle, which he lays over the End of the Draw-Pin, which keeps it from falling down, until he has Occasion to use it for Guiding or Turning the Thiller.

When we turn the Furrow from the Row, (which will then be ever on the left Side of the *Plow*) the *Plow* must be set in a very different and contrary Posture; but then the Plants commonly being low, there is no Danger of the Whipper's or Limber's hitching or taking hold of them; but the Driver must take Care that he does not tread on them, nor suffer any of the Horses to do so, and they of themselves when they are not blind take all the Care they can to avoid it; and I observe that the Plants are oftener injur'd by the Driver, than by the Horses.

'Tis in this last mention'd Manner of Hoing, when we go very near to the young Plants, the first or second Time, that we must take Care of burying them with the Earth, which (especially) when dry and fine is apt to run over to the left Side of the *Plow*; this we can in great Measure prevent, when the Ground is clean, by nailing with three or four Nails a very thin square Piece of Board to the Sheat, with one Corner bearing at a, in *Fig.* 1. and its other lower Corner bearing on the Back of the Coulter on its left Side at b, its upper Corner reaching to c, or higher; its fore End is ty'd on to the Coulter by a leathern Thong passing thro' a Hole very near the End of the Board, the lower Edge of the Board must come no lower than the prick'd Line a, b which is just ~~level~~ with the Surface of the Ground before it is rais'd by the Share; for if this Board should be set down too near the Share, the *Plow* would not go; but being set in this Manner, it prevents the Earth (when never so much pulveriz'd in the dryest Weather) from running over upon the Plants to bury them tho' the *Plow* go very near them; except in this Case we never use a Board, the Earth running over to the left Side, being often advantageous in Hoing; for it changes more Surface of the Ground, than if it went all to the right, and when in Summer we hoe *from* the Wheat Rows, not going very near to the grown Plants, this Earth that runs over the Share to the left, helps to mend such Places where the Furrow was not thrown up close enough to the Row by the precedent Hoing.

The first Time we turn a Furrow *towards* the Row, the Horses go in the Trench near to it, and the *Plow* stands on the left Side of the Horse-Path, almost in the same Manner as when the Furrow is first turn'd from the Row; but we very often make Use of a common *Plow*, for throwing down the Ridge which has lain all the Winter in the Middle of the Interval. One Wheel going on each Side of that Ridge, holds that *Plow* to a great Exactness for spliting this Ridge into Halves, which the Earth-Board, being set out for that Purpose, throws up to the Row on each Side of the Interval.

We also very often make Use of the two-wheel'd *Plow*, for raising up the Ridges, whereon we drill the Rows; not but that the *Ho-Plow* will do every Thing that is necessary to our Husbandry, yet the common *Plows*

below

Coun

Plows being heavier than we usually make our *Ho-Plows*, they by their Weight and Help of their Wheels go a little steadier, and besides the Plowmen being more accustom'd to them prefer them before all other, where their Wheels are of no Prejudice.

I never saw neater Ridges rais'd by any *Plow*, than by the *Ho-Plow*, nor finer Plowing; and I believe that were it made as heavy and as strong, it would outdo the *Swing-Plow*, in plowing miry Clays, where *Plow* Wheels cannot go; but I having no such Land, have never made any *Ho-Plow* heavy enough for it. However I am convinc'd, by the many Trials which I have seen, that no other *Plow* can be used for every Horse-hoing Operation, so effectually as this I have now describ'd.

The making the *Ho-Plow* is not difficult for a good Workman; and a few of the Holes for setting the Beam are sufficient, provided they are made in their proper Places, which is impossible for me to describe exactly in a Number that is no more than necessary; because the Distance the *Plow* must go from the Horse-Path on either Side, is uncertain, as the Largeness or the Depth of the Furrow is; and for that Reason, 'tis as impossible for me to direct the Plowman to the particular Angles, at which his Beam must be set with the Plank, to keep the Share parallel to the Horse-Path; as it is to direct a Fidler, how far he must turn his Pegs to give his Strings their due Tension, for bringing them all in Tune, which without a Peg to each String could never be done; but when he has his just Number of Pegs, his Ear will direct him in turning them, 'till his Fiddle is in Tune; so the Plowman by his Eyes, his Feeling, and his Reason, must be directed in the setting his *Plow*; but without a competent Number of Holes, he can no more do it than a Musician can tune four Strings upon one Peg. And I am told that some Pretenders to making the *Ho-Plow*, have fix'd its ~~Bottom~~ Beam to the Plank immovable, which makes it as useless for hoing betwixt Rows, as a Violin with but one Peg to its four Strings, would be for playing a *Sonata*.

Fig. 5. Shews the Sort of Yoke, that is us'd on every Ox that draws in a single File, as they always must when they work with the *Ho-Plow*; but after they have been accustom'd to draw double (*i. e.* two a-breast) they must be practis'd for about a Week to draw single, before they are set to Hoing; for otherwise they will be apt to demolish the Rows, one running off to the right Hand, expecting his Fellow to come up with him on the left, and another will run off on the left to make Room for his Companion to go a-breast with him on the right, endeavouring to go in the Manner in which they us'd to be placed for drawing in Pairs.

I suppose I need not give any Caution about muzzling the Oxen when they hoe; because they will eat the Plants as soon as they come an Inch above the Ground, and that will shew the Necessity of it; but there is no Occasion to muzzle the Horses until the Plants are grown as high as their Noses, when rein'd up as in *Fig.* 4.

Fig. 6. Is an Instrument of Pulveration, which might have been sufficiently describ'd by its Matter, Weight, and Dimensions, without any Portrait, were it not to shew the particular Manner of drawing it, being very different from that of a common Roller, whose Frame is difficult to make, and costly; but this being only three Foot long, is drawn by a simple

ſimple Pair of Limbers, held together by the two Bars A and B, firmly pin'd in at their Ends.

Its Gudgeons muſt not come out beyond the outer Surface of the Limbers, leſt they ſhould take hold of the Plants, when drawn in the Intervals; alſo the hinder Ends of the Limbers, behind the Gudgeon, ſhould crook a little ~~downwards~~, for the ſame Reaſon. upwards

This Stone Cylinder is two Foot and a Half diameter, and weighs eleven hundred Weight beſides the Limbers. It muſt never be us'd but in the dryeſt Weather, when neither the *Plow* nor *Harrow* can break the Clods; and then being ſo very ponderous and ſhort, it cruſhes them to Powder, or into ſuch very ſmall Pieces, that a very little Rain, or even the Dews (if plentiful) will diſſolve them.

I have had great Benefit by this Roller in preparing my Ridges for Turneps. The Weather proving dry at *Midſummer* (which is the beſt Seaſon for planting them) the Land was in Pieces like Horſe-Heads, ſo that there was no Hopes of reducing them fit for planting with Turneps that Year; the Clods being ſo very large, that they would require ſo many Viciſſitudes of wet and dry Weather to ſlack them; but this Inſtrument cruſh'd them ſmall, and the *Plow* following it immediately, the Ridges were harrow'd and drill'd with very good Succeſs.

I have alſo made uſe of it for the ſame Purpoſe in the Middle of a cloddy Field, where it pulveriz'd the Clods ſo effectually, that the Benefit of it might be plainly diſtinguiſh'd by the Colour and Strength of the two following Crops, different from the other Parts of the Field adjoining on both Sides, whereon the Roller was not drawn.

But cruſhing has ſuch a contrary Effect from ſqueezing, that if this Roller ſhould be us'd when the Land is moiſt, it would be very pernicious, by unpulverizing it, of which I am ſo cautious, that ſometimes I let the Roller lie ſtill for a whole Year together.

There is alſo a long triangular *Harrow*, which is ſometimes uſeful in the Intervals when the Earth is of a right Temper betwixt wet and dry; but there is no need to deſcribe it, and I ſcarce uſe it once in two or three Years.

The Diameters of the wooden and iron Pins and Screws, with their Holes; and the Sizes of the Nails to be made uſe of in all the deſcrib'd Inſtruments, I leave to the Diſcretion of the Workmen, who, if they are Maſters of their ſeveral Trades, cannot be ignorant of ſuch Matters.

Fig. 7. and *Fig.* 8. Shew the Lands of Turneps mention'd in Pages 1 and 2.

INDEX

Bars A and B, firmly pin'd
outer Surface of the Lim-
when drawn in the Inter-
hind the Gudgeon, should
Half diameter, and weighs
It must never be us'd but
nor *Harrow* can break the
short, it crushes them to
a very little Rain, or even
preparing my Ridges for
mmer (which is the best
ces like Horse-Heads, so
for planting with Turneps
hey would require so ma-
ck them; but this Instru-
wing is immediately, the
d Success.
urpose in the Middle of a
ffectually, that the Benefit
olour and Strength of the
'arts of the Field adjoining
vn.
m squeezing, that if this
t, it would be very perni-
cautious, that sometimes I
ich is sometimes useful in
per betwixt wet and dry;
rce use it once in two or
ns and Screws, with their
use of in all the describ'd
orkmen, who, if they are
nt of such Matters.
rneps mention'd in Pages

INDEX

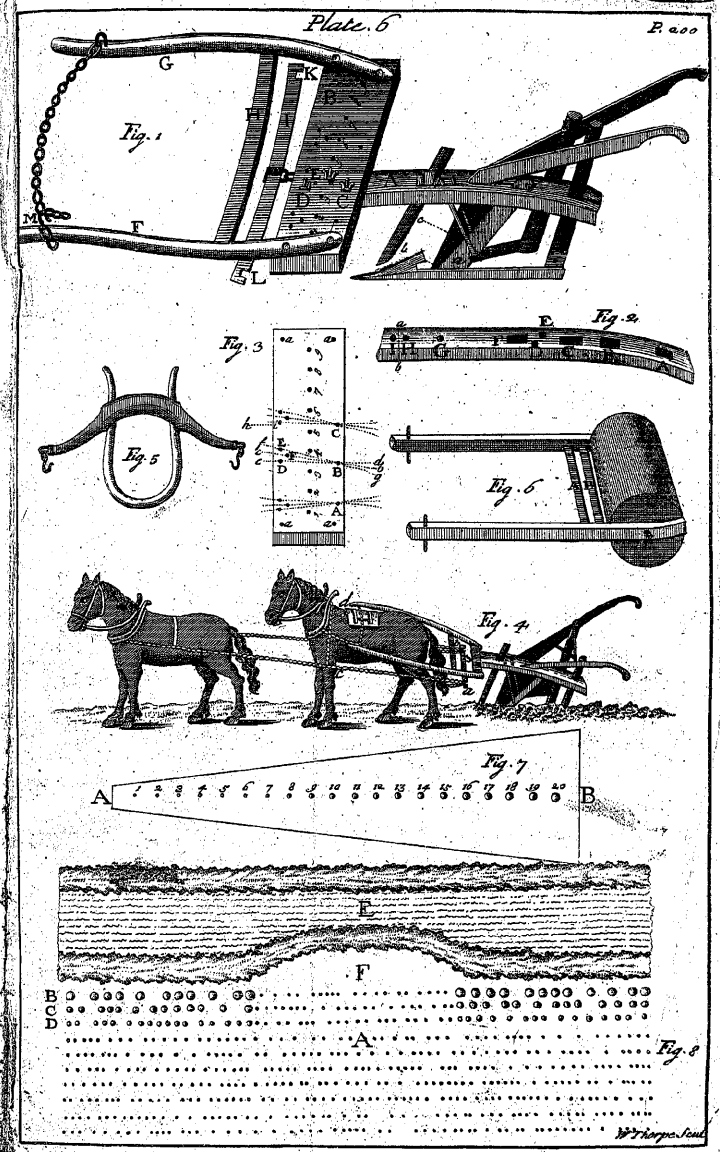

INDEX

TO THE

PLATES.

PLATE I.

PLATE II.

PLATE III.

PLATE IV.

FINIS.

A 2

SUPPLEMENT

To the ESSAY on

HORSE-HOING HUSBANDRY.

CONTAINING

Explanations and Additions both in Theory and Practice.

WHEREIN

All the Objections against that Husbandry, which are come to the Author's Knowledge are consider'd and answer'd.

By JETHRO TULL, *Esq;*

LONDON:

Printed for and Sold by the AUTHOR: And may be had at Mr. *Mills's* in *King-street* near *Golden-Square*, *London*: At *John Aitkins's*, Esq; in *Edinburgh*: And at the *Bear* in *Hungerford*, *Berks*. M.DCC.XXXVI.

ADVERTISEMENT.

In the following Supplement *I have set the Number of the* Page *and* Line *before each* Note, *to shew from whence it was taken; so that if a Line be drawn with a Red Pencil, under the same Words in the Essay, and figured in the Margin, these* Notes *will be as useful to the Reader, as if they had been printed at the Bottom of the Pages, to which they respectively belong.*

The scurrilous Authors, whose Objections I here answer, having broke through all Rules of Decency and Good Manners, I am obliged to no Terms with them, especially as they endeavour to fix Scandal upon me *by Name; and I mention* Them *only as nameless unknown Persons.*

Their Two Volumes, consisting of Seventeen Parts, in Advertisements, Dedications, Introductions, Prefaces, *and* Essays, *differently* paged, *and some not paged at all, makes it very troublesome to quote them by their long* Title *of* The Practical Husbandman and Planter, *and would take up too much of my Time and Paper; therefore I often use the single word* Equivocus *for the whole collective Body of that* Quibbling Latent Society.

I am sorry their Conduct should compel me to take Notice of their slanderous Scurrility, &c. *They have so blacken'd themselves with their own Ink, that I would rather hide from my Reader the disagreeable Sight, if I did not think it necessary to be shewn for avoiding a* Publick Mischief.

NOTES *to the foregoing* ESSAY.

PAGE 1. Line 12. *Single and Perpendicular.*] In this Manner descends the first Root of every Seed; but of Corn very little, if at all, deeper than the Earth is tilled.

These first Seed-Roots of Corn die as soon as the other Roots come out near the Surface, above the Grain, and therefore this first is not called a Tap-Root; but yet some of the next Roots that come out near the Surface of the Ground, always reach down to the Bottom of the pulveriz'd Staple; as may be seen, if you carefully examine it in the Spring time; but this first Root in Saint-foin becomes a Tap-Root.

P. 2. L. 8. *But the Row* B, *which was next to the Land* E, *grew much larger yet.*] A like Observation to this on the Land E, has been made in several Turnep-Fields of divers Farmers, where Lands adjoining to the Turneps have been well tilled, all the Turneps of the contiguous Lands that were within three or four Foot, or more, of the newly pulveriz'd Earth, received as great, or greater Increase, in the Manner as my Rows B C D did; and what is yet a greater Proof of the Length of Roots, and of the Benefit of deep Hoing, all these Turneps have been well hand-hoed; which is a good Reason why the Benefit of the deep Pulveration should be perceivable at a greater Distance from it than mine, because my Turneps not being hoed at all, had not Strength to send out their Roots through so many Foot of unpulveriz'd Earth, as these can through their Earth pulveriz'd by the Hoe, tho' but shallowly.

This Observation, as 'tis related to me (I being unable to go far enough to see it myself) sufficiently demonstrates the mighty Difference there is between Hand-hoing and Horse-hoing.

P. 2. L. 50. *The annual encreased Length of the Roots was near three Times, &c.*]. I'm told an Objection hath been made from hence against the Growth of a Plant's being in Proportion to the Length of its Roots; but when the Case is fully stated, the Objection may vanish. This Witch-Elm is a very old decay'd Stump, which is here called a *Staggar*, appearing by its Crookedness to have been formely a *Plasher* in an old White-thorn Hedge wherein it stands: It had been lopped many Years before that accidental Increase of Roots happen'd; it was stunted, and sent out poor Shoots; but in the third Year of these Roots, its Boughs being most of them horizontally inclined, were observed to grow vigourously, and the Leaves were broad and of a flourishing Colour; at the End of the third Year all these Roots were taken away, and the *Area* being a Chalk-Rock lying uncovered, round the Place where the Single Root, that produced all these, came out of the Bank, no more Roots could run out on the bare Chalk, and the Growth of the Boughs have been but little since.

P. 4. L. 43. *The White Colour proceeds from the Chiliferous Vessels.*] Or rather, from the Watersh, Wheyish Chyle contained in them.

P. 7. L. 3. *And receive in Return from them, a share of Food, &c.*] They receive it by their Capillary Sap-Vessels, after it has been purify'd and prepared by the Leaves fit for nourishing all Parts of the Plant.

P. 7. L. 11. *From the moist Earth above in the Trough.*] 'Tis certain, that Roots and other Chyle-Vessels of a Plant have a free Communication throughout all their Cavities, and the Liquor in them will run

towards

towards that Part where there is least Resistance; and such is that which is the most empty, whether it be above or below; for there are no *Valves* that can hinder the Descent or Ascent of Liquor in these Vessels, as appears by the Growing of a Plant in an inverted Posture.

P. 7. L. 32. *Then we know 'tis altered.*] Though the Earth and Water by passing twice through the Pores of Garlick Roots, should possibly acquire some small Alteration, it would be no Proof of its being converted into Sap: for if you steep this strong-scented Plant in a considerable Quantity of Water, it will all have a Tincture of its Stench from its *Effluvia*, and yet no body will believe such Water is become Sap; yet I know not whether there are enough of those Effluvia in its fibrous Roots, not having prosecuted that Experiment. And now upon further Consideration, I think Mint a much fitter Plant than Garlick, to shew the Difference there is between Chyle and Sap, because its Effluvia are not so strong, and the fibrous Roots of the Mint may be drawn out at every Joint of the Stem. The Chyle may be had from fibrous Roots near the Top, which enters at the Roots at its Bottom.

Note, 'Tis best to lop off the tender Top of the Mint, in order to make the Stem the stronger, to afford the more high Roots, when set in Water; for no Root will ever come out of it in the open Air.

P. 8. L. 28. *Of the Sap's Circulation.*] SAP is a Word, which Custom has made proper to signify the Blood of Plants.

ROOTS is the Word used for the Guts of a Plant.

LEAVES the Word used for the Lungs of a Plant.

PABULUM the Word used for the Food of Plants, before taken in by the *Roots*: and also for the *Chyle*, which is the most proper Word for it, after taken in, before it is mixed with the *Sap* in the *Leaves*.

PABULUM is sometimes the Word used for the Nourishment that the *Chyle* gives to the *Sap*, and sometimes for the Nourishment and Increase that the Sap gives to a whole Plant.

I believe, that the whole Stress of the Arguments against the Circulation of SAP, consists in the Mistake of making no Distinction between Chyle and Sap, which is no less than between the Chyle and Blood of an Animal: And this Distinction, I think, may be fully demonstrated by repeating the Experiment of my Mint G, *p.* 5. wherein the Liquor which entered the Roots at the Bottom of the Glass, and issued out at the other Roots in the Box from near the Middle of the Stalk, (which being lopped was not above nine Inches) appeared both in Taste and Colour, to be no Way alter'd from the Water at the Bottom of the Glass, from whence the lower Roots imbibed it: The Colour of the Juice of the bruised Mint, when pounded and strained was greenish, and would have been greener, no doubt, if it could have been separated from all Mixture of that other Liquor, which I call Chyle.

The Juice or Sap of Mint, though mixt with the Chyle has a strong Aromatick Flavour: but the Chyle, which is in the Root, and all that issues out of a Root is insipid, which you may prove by sucking a Mint-Root, when taken out of Water, except you chew or bruise it, for then 'tis possible there may be some very small Quantity of Sap express'd from the Capillary Vessels, that run in the Coats of the Root to nourish it. Yet I could never find any Taste in Mint-Roots that Way neither, the Proportion of Sap therein being too minute to affect my Palate.

But if Sap can be tasted in chewing the Fibrous Roots, as doubtless it may in some strong scented Plant, then let us consider what will follow upon what *Equivocus* affirms, *viz.* "That Sap is not made in the "Root, and that the Root contains a Liquor different from the Sap or Liquor of the Stem". From hence he argues, against the Circulation of the Sap: "For, says he, if the Sap should descend from the Stem into "the Root, what a *Jarring* would there be between these two different Liquors or Juices?" To which I answer, that the Chyle and Sap being contained in different Vessels, the Chyle in the larger Cavities of the Root, the Sap in the fine Capillaries, which supply Nourishment to the Vessels of the Root, they never mix there, and therefore there can be no *Jarring* betwixt them; and, if on Chewing the fibrous Roots, (which I suppose is best done when they are dry) Sap is tasted in them, 'twill be a Proof, that Sap not being made in the Root, descends thither from that Part of the Plant where it is made: And that Part must be it, that has the most *secretory* Ducts, which send off what is dissentaneous to Sap; and, I think, the *Leaf* is allowed to be this Part; and 'tis proved to be so, when the Root being in Water *without*, and the rest of the Plant being *within* the *exhausted Receiver*, nothing is found to issue out from any other Part, but from the Leaves.

For farther Proof, I would propose to the Curious, that a good Quantity of this Liquor, which may easily be obtained from an upper Root, after it has past through a great Part of the Stalk, be distilled, and an equal Quantity of Sap express'd from the pounded Stalks of Mints, I am confident the different Quantities of Spirit so drawn from these Distillations, will convince them of the Difference there is between Chyle and Sap.

There may be yet another Proof, if the like Experiment to mine of Mint G, be made with some Plant that has a red Sap, as the red Beet hath.

When the Chyle has thus passed through the Body of such a Red Plant, and yet retains its white Colour, there will be no more Room for Arguments against the Circulation of the Sap taken from the Motion of this Chylous Liquor.

The Roots that supplied the Earth in my Trough with Moisture sufficient to maintain my Mint Plants, (marked H H in *p.* 5 & 6.) therein, a whole Summer, gave me great Reason to believe, that such a Quantity of Liquor imbibed by these Roots, was not converted to Sap in them. And, indeed, if Sap could be so soon made by the Roots, great Profit might be made of some Plants, by obtaining more Sap from such upper Roots in a few Hours, than the whole Sap of the same Plant amounts to.

When the Roots of a Plant are set in Water *without*, and its Leafy Part included in the exhausted Receiver, Water will distil from the Leaves, and forming Drops thereon, fall down in the Receiver; but when the leafy Part is in Water *without*, and the Roots included *within* the exhausted *Receiver*, no Liquor will come out from the Roots, as in the Experiment in *Phil. Transf.* Here, if Water enters the Leaves, 'tis a Proof, that when the Chyle-Vessels have delivered their Liquor to the Sap of the Leaves, there are a Sort of Valves which prevent both Sap and Water from entering the Chyle-Vessels from the Leaves, for if either of them did, it must have issued out at the Roots in the empty Receiver, where there was no Resistance to ballance the external Pressure; therefore what Water enter'd the Leaves must have remained only in the Sap; and in all Probability circulated with it, as doth the Water which enters the Cappillary Veins by the Pores of the Skin of Men that swim or bath; and also of Washer-women.

There

There can be no other Valves in the Chyle-Vessels, except the above-mentioned, because the Chyle can move both Ways, as is proved by a Willow growing in an inverted Posture.

Since no Sap is ever found in the Cavity of a Root, or of any of its Appendages (as may be proved by my said Mint G, &c. and such Appendages will come out all over a Plant, as at the End of a Brier) we may conclude, that Sap is not made in the Root, nor in passing out of the Root into the Stem, as *Equivocus* asserts, because the Chyle continues to be Chyle all over the Body of the Plant in its proper Vessels, until it reaches the Leaves, and in them 'tis certainly mixed with the Sap, because both the *Mint-Sap* and *Garlick-Juice* were tasted in the Leaves of my Mint E, in *p.* 5.

If the Garlick-Juice that was taken in by *Mint* E, had been made Mint-Sap, by being purify'd by the Root, Stem, or Bark of the Mint, it could not have remained Garlick-Juice in the Mint-Leaves, as by the Taste it plainly did.

'Tis very probable, that the Chyle mixes with the Sap at the Entrance into the Leaf, and that the Taste of Mint and Garlick in the same Leaf, is from a Mixture of them there, in the Sap-Vessels only, as the Chyle and Blood are mixed in the Blood-Vessels of Animal Lungs; for no Chyle-Vessels can ever be found in a Leaf, as they may be in every other external Part of a tender-rind Plant, and pure Chyle drawn from them.

'Tis certain the Chyle must enter the Sap Vessels somewhere, else how could the Sap be diluted or nourished? And since the Leaf is the only Part free from Chyle-Vessels, though Chyle is there tasted, I see no reason to doubt of the Chyle's being in the Sap-Vessels of the Leaf, and not there in their own proper Vessels.

The reason why the Chyle, (or Water) passed out at the Roots that were in Earth in the Trough, and in Sand in the Box, was, because those Roots had not so equal a Pressure to their whole Superficies from the Earth and Sand as the other Roots had from the Water: for Earth and Sand having larger Pores than Water, some of those Pores were filled only with Air, whose Weight was no Counterpoise against the Water, which having lesser Pores pressed against more of the Superficies of the Roots contained in it, and thereby caused the Chyle to issue out at the Superficies into those Pores of the Earth and Sand where was less Resistance.

And the same Reason may be given, why some of the Chyle, taken in by Roots which are in Water and Earth may pass out at other Roots of the same Plant that have less Water in the Earth wherein they are included.

Now this Chyle, (by some mistaken for Sap) entering at the Roots, has, doubtless, a Progressive Motion only, and doth all, except in case of unequal Pressure just mentioned, march to the Leaves, thence never to return, save such Parts of it as are proper and sufficient to dilute and nourish the Sap; all the rest, I think, is universally agreed to perspire off from the Leaves.

And this Motion of the vegetable Chyle agrees with that of the Animal Chyle, which likewise is only Progressive, it ascending to the subclavian Vein, not by Pulsion any more than the vegetable Chyle.

Roots, indeed, differ from Guts in this, that the Cavities of Roots continued quite through a Plant, serve as Chile-Vessels, which Office the Cavities of Guts cannot supply in an Animal, because these carry the Mass from whence the Chyle is imbibed by the Lacteals, and which is carried from their *Insides* or Cavities outwards; and therefore 'twas necessary for Guts to have other Vessels to carry the Chyle to the Blood.

But Roots taking in their Chyle from *without*, needing no other Vessels, serve by themselves for both Uses, *viz.* to separate the Vegetable Chyle from the Mass of Earth, wherein they are included, and to carry it in their own Cavities up to the Leaves, where it is mixt with the Sap.

True Sap never passing *out* nor *in* at the Leaf, nor at any other Part of a Plant, unless wounded, must be made [of Chyle] within the Plant.

And must either *circulate* or *stagnate*; and Stagnation of Sap is as sure Death to a Plant, as Stagnation of Blood is to an Animal; for without Motion it would corrupt and putrify, and this Motion must be circular, because it being proved, that the Chyle is joined with the Sap in the Leaves; and allowed, that Sap is made of, or rather nourished by Chyle, (which, I believe, no Body who considers will deny) it follows, that the Sap passes from the Leaves to all Parts of the Plants, as Blood doth from the Lungs of an Animal, for the Nourishment of the whole Body; and if such Part of it as is not spent in nourishing the Plant was not returned back to the Leaves, there could be no Sap in them to mix with the Chyle: This Motion from the Leaves, and returning to them, is what I call *Circulation*, by what Means soever it is performed.

There may be other Ways by which this Circulation of Sap is performed, besides *Pulsion*: I am inclin'd to think *Trusion* the most likely; and, as I remember, Mr. *Bradley* has accounted for it this Way, *viz.* As Heat rarifies the Sap in one Part of a Plant more than in another, it must require more Room, and consequently expand itself, and move further, thrusting or pushing on that which is next it: But far be it from me to attempt explaining the Manner of it.

If the Analogy there is in other Respects between a Plant and an Animal, holds between Sap and Blood, there must be in a Plant Vessels analogous to Arteries and Veins, and even to Capillaries; for 'tis said by the Learned, that Blood doth not nourish the Vessels by passing through their Cavities, but by that which is sent out of the Capillary Arteries into the *Parenchyma*. How very unlikely is it then, that a Plant should be immediately nourished by the crude Chyle passing once from the Root through the Cavities of the Chyle-Vessels up to the Leaves, and thence all into the Atmosphere?

The Argument brought against this Circulation, from the great Quantity of Water imbibed and perspired in a short Time by the *Sun-Flower*, will be answered by the very short and direct Passage which that Liquor hath from the Root to the Leaves, which perform the Office of Kidnies to the redundant aqueous Part of this Chyle.

The Chyle in an Animal has but a short Passage from the Lacteals to the Blood; but yet much longer than the Passage of the vegetable Chyle.

The Animal Chyle, tho' not moved by Pulsion, arrives soon at the subclavian Vein, and there joining with the Blood, goes with it immediately to the Heart, whence 'tis by Pulsion driven through the Lungs, being therein more intimately mixt, and also purify'd; and that which is not thence thrown off by Expiration, hath not a long Journey by the Emulgents to the Kidnies, which separate and send down a greater or lesser Quantity of Urine, and quicker or slower in Proportion to the Quantity of Liquor drank; and

and this is sometimes much more than is necessary. As I remember two *Swiss* Soldiers at *Montpelier* were carried before the Governor by their Landlady, for refusing to pay for fifty-six Pots of very strong Wine, which they drank at one Sitting: The Dispute was about the Odd Pots, for they said, they never used to drink more than Fifty in that Time; but the Woman insisting on her Proof, the Governor paid for the odd. A *Montpelier* Pot contains three English Pints.

Now, I suppose this Quantity is vastly greater than is necessary for a Man to drink in that Time, yet not so much unnecessary as the Quantity of Water was to Mr *Hales*'s Sun-flower; for I am in no doubt, but that it would have thriv'd well with the fiftieth Part it imbibed; because I have seen a Sun-flower grow very well in dry, rich Ground in a dry Summer; and then it might drink no greater Quantity, than a Man in his regular Way of Living, Bulk for Bulk.

The Lungs cannot do the Office of Kidnies in an Animal, because being at such a Distance from the open Air, so great a Quantity of Liquor necessary to be sent off, tho' rarified to Vapour, would cause *Suffocation* in the *Bronchia* and *Trachea*: But Leaves being in Contact with the open Air, can execute the Office of Kidnies without that Danger.

Nature has other Ways of discharging the *Aqueous* Part of the Blood, besides Kidnies, even in some Animals, as in Fowl; for to them their Feathers serve as Kidnies, having no other, and yet they drink plentifully.

Fishes also have their Lungs almost without their Bodies, like Plants, and seem to have no other Passage for discharging their Urine but their Lungs, though Fishes are accounted great Drinkers.

No Body doubts of the Circulation of Blood in all Animals, tho' in many very small ones it cannot be proved by Demonstration; and there is no more reason to doubt of it in Plants than in Oysters, Mites and in many Species of Insects too minute to be seen by the naked Eye.

The Argument taken from the Liquor issuing plentifully out of the lower Part of a Notch, or a disbark'd Gap of a Tree or Branch set in Water, and not from the Upper Part of it, is answered, by shewing, that the greatest Part of that Liquor passes out of the Leaves without descending; and so cannot issue out at the Upper Part of the Gap: and the Sap being thicker, and in less Quantity, has probably a much slower Motion, and is not so apt to pass out at a Cut, as the aqueous Chyle is; for a Plant never bleeds to Death, but when the Sap is very much diluted by a great Mixture of Chyle.

As to what is offered by *Equivocus* against the Circulation, from the same Stock's producing different Sorts of Pears, it may be answered, that the *Ovaria* of Plants are a Part of their very Substance, and do not fluctuate or circulate in their Juices; so that each *Scion* or *Bud*, contains actually adhering to itself, all the Fruit and Plants that ever will proceed from it; and though the same Juices may so agree with the Stock and the *Scions*, as to nourish them all, the *Scions* being different from the Stock, and from one another, yet the Juices cannot change the Sort of Fruit, that being an Organical Part, only nourished, extended, and encreased by the Juices.

Yet we see, that when the Nature of a Stock is very different from the *Scion*, the Juices made by their different Vessels are so disagreable to each other, that one or both, but always the *Scion* will die.

'Tis true, that the Juice of a Stock, mixing with that of the *Scion*, may a little alter the Flavour of its Fruit; as a Pear grafted upon a Quince may be mended, but if grafted upon a White-thorn will be worsted; but this may very well be from that little Alteration the Sap receives in circulating through the Vessels of the Stock.

We find by Inoculation, that a Bud is an entire little Tree, containing within itself its proper Seed, and all the Trees that ever can proceed from it; for to suspect that all the Individuals of Plants and Animals did not actually exist within the First of each of their respective *Species*, would be to suspect that there is an *equivocal* Generation of them.

The last Objection I shall speak to is this:

'Tis ask'd by *Equivocus*, *How goes on the Circulation, when a Part is cut off from a Plant?* Why, I say it goes on as the Circulation of Blood does in a Man, upon Amputation of a Leg or an Arm.

As for the Part cut off from the Plant, provided it be at a proper Season stuck into the Ground, if it hath a Spongy Rind it will grow, the Roots being the Chyle-Vessels passing all over the Plant, are sent out from that Part of the Bough which is in the Ground, and doing that for it, which all fibrous Roots do in the Earth; the Bough sends out Leaves also, which are contain'd all over it, which are explained in the Air, and then the Bough becomes a Tree.

Why the Roots should chuse to strike out in the Earth rather than in the Air: and the Leaves in the Air, rather than in the Earth, I can't tell: 'Tis by an unknown Sort of *Mechanism*, or rather *Instinct*, which I can no more pretend to explain, than I can the Cause of *Gravitation*.

But I can see no Reason to believe, that a Plant is a mere *Thermometer*, nor that the Vegetable *Life* can be carried on any more than the Animal Life, without a Circulation of that Juice, which is necessary to nourish and maintain it.

I might urge another Argument, against those who assert that the Sap is made by the Bark in its Ascent only; which Argument, is, That if it were so, the Sap must be more pure the higher it ascended, and pass off into the Atmosphere in its greatest Perfection; which would intimate, that Sap was not design'd by Nature for Nourishment of Plants, but to be thrown away as useless, when it was made the most useful for that Purpose.

P. 8. L. 32. *When Salt being bound to this String, passes by other Vessels, &c.*] It must be the Chyle-Vessels that imbibe the Salt, as they would have imbibed the Chyle, had the String been in Contact with Earth, as it was with the Salt, all fibrous Roots being Parts of the *System* of Chyle-Vessels, as Leaves seem to be of the Sap-Vessels; the former carrying their Contents to the Leaves, that were not able to separate or discharge the Salt from the agreable Part of the Chyle, nor to carry the Salt back to the Stem, in their Sap-Vessels; which, 'tis probable, were soon corroded by the Saline Acrimony: The Salt appear'd to remain in the Leaves, by their tasting almost as strong as pure, crude Salt.

Thus, 'tis no wonder that there should not be Salt enough carried from the Leaves to the Young Potatoe to be tasted in it.

And it could not be carried to it, immediately from the String, without first passing the Leaves; because the Sap-Vessels never send out Roots, and therefore could not imbibe the Salt at the String; the Chyle-Vessels only sending out Roots, as the Sap-Vessels only send out Leaves: Neither could any Salt pass to the Young Potatoe in the Chyle-Vessels, they always carrying their Liquor towards the Leaves, but never from them; except

except when they supply Roots that happen to be empty, as in the Case of *Mint* H H, mentioned in page 7.

P. 14. L. 4. *The only Difference of Soil, &c.*] As I have said in my *Essay*, That *a Soil being once proper to a Species of Vegetables, it will always continue to be so.* It must be supposed that there be no Alteration of the *Heat* and *Moisture* of it; and that this Difference I mean, is of its Quality of nourishing different Species of Vegetables, not of the Quantity of it. Which Quantity may be alter'd by Diminution or Superinduction.

P. 14. L. 20. *Transmutation.*] I can find no clear Proof of the Reality of Transmutation: The only one that I know is that Sir *Isaac* offers, for Water being transmuted into Earth, which he quotes from Mr. *Boyle*; but that Experiment was made by a Friend of Mr. *Boyle*'s, and Mr. *Boyle* himself was so far from believing it a real Transmutation, that he gives a Reason to prove the Impossibility of it.

The Substance of the Experiment here follows, viz. *An Ounce* of Rain Water being distill'd near two hundred Times, there remained *six Drams* of white Powder, and a considerable Quantity of Water left behind, which Powder, Mr. *Boyle* suspects might be partly obtain'd from the Glass-Vessel wherein it was distill'd, rather than from the *Ounce* of Water, neither the Glass nor the remaining Water having been *weighed*; for if the Glass was deminish'd, (which could not be known but by *weighing*,) or if the remaining Water was above *two Drams*, it would have been a Demonstration, that all the Powder did not proceed from the *Ounce* of Water: And I suppose that some Part of the Water (being volatile, and passing Pores, that scarce any other Fluid doth) might get off thro' the hot Glass, or otherways, in such a Number of Distillations; And that then there must be (for Supply of that Loss) some adventitious Matter in the *six Drams* of Powder, though the Water that remain'd should weigh but just *two Drams*.

And this Powder must consist of Parts of the Glass, and of such Matter as the Distillations had separated from the Pores of the Water.

Mr. *Boyle* thinks, That "If Water be truly an *Homogeneal* Body, 'tis difficult, if not impossible, to conceive that it can be transmuted: For how (saith he) can the bare Convention of the Parts of a Fluid into a Concrete, alter the specifick Gravity?" Which is as much as to say, That Water being specifically lighter, cannot become Powder, which is specifically heavier: And Water after Distillation (being more *pure*, tho' never perfectly *pure*) always becomes specifically lighter than before; and the Matter that is left in the *Still*, heavier; Water changing its specifick Gravity in Proportion to the Degree of its Purity.

And Water considered abstractedly from the Charge of other Matter (chiefly Earth) which it carries, in its Pores (or Interstices) is at this Time, I think, generally agreed to be *Homogeneal*, consisting of extremely *small*, *smooth*, *hard*, *porous*, *spherical* Particles of *equal* Diameters *Incompressible*, void of Taste, and having no one Quality that renders a Body *Heterogeneous*.

But indeed (as far as I am inform'd) Mr. *Boyle* and his Friend, at the Time this Experiment was made, did not at all distinguish any Difference between the Particles (or Corpuscles) of Water, and the other Matter contain'd in its Pores (mistaking the Vehicle for the Thing carried,) than which, nothing can be more different; and therefore they, as they seem to consider both, only confusedly, could have no distinct *Idea* of either; and thus this Experiment proves nothing in Favour of Transmutation. And yet it has deceived some, who one would have thought should have examin'd more narrowly into the Matter, than to mistake a *Separation* of Earth from Water, for a *Change* of Water into Earth.

But this will cease to be a Wonder, when we see what that Miracle of a Man Sir *Isaac Newton* brings for Argument to countenance an *Hypothesis* of his.

"Water (he saith) is by Heat converted into *Vapour*, which is a kind of *Air*, and by Cold into *Ice*, which is a Stone; and this Stone is convertible into *Water* again by Heat, as *Vapour* is by Cold."

But I believe the Learned will now subscribe to the Opinion, That *Water*, when carried in the *Air*, under the Form (or rather Name) of *Vapour*, is not *Air* of any kind; and that, when it is under the Form of *Ice*, it is not really Stone: it never having all the *Properties* of *Air*, or of *Stone*.

His other Instances are of like Validity; for an Egg being turn'd into an Animal, is no more a real Transmutation, than that the *Royal Oak* was *transmuted* into a *Prince*, when he was taken out of it, or than a Man's *House*, when he is gone abroad, is transmuted into a Man.

A *Maggot*, is a little Fly envelop'd in a thin Skin, which, as a Garment, hides the Wings and Legs; and continues to be the same Fly when uncovered, as a Man is the same Man, when his Garments are off, as when on; the Fly grows bigger, and so doth a Boy when he becomes a Man, but still continues to be the same Person, without any real Transmutation, unless he should become infallible.

Sir *Isaac* says, "That all *Birds*, *Beasts*, *Fishes*, *Insects*, *Trees* and *Plants*, grow and increase out of *Water*, and aqueous and saline Tinctures: And on Putrification all of them revert into *Water*, or an *aqueous Liquor* again."

Also in treating of *Comets*, he saith, "They seem necessarily requisite, from whose condensed Exhalations and Vapours, all that Moisture which is consumed in *Vegetations* and *Putrifaction*, and turned into dry *Earth*, may by Degrees be continually re-supply'd and recruited; for all *Vegetables* do entirely grow and encrease from *Liquors*: And then, as to their greatest Part, do turn by Putrifaction into dry *Earth*, and a Slime perpetually is precipitated to the Bottom of putrifying *Liquors*.

"From hence the Quantity, or Bulk of dry Earth, must continually increase, and the *Liquors*, or Moisture of our Globe, continually decrease, and at last, be quite evaporated and lost, if they had not as coutinual a Supply from some Part or other of the Universe."

Now I must beg Leave to confess, that I can see no Force in these Arguments, either for the *Transmutation of Water*, or any such Necessity of *Comets*.

And even tho' *Transmutation* should be supposed (which by no Means can be granted,) yet no such Consequence of the *Decrease* of *Water* on our Globe, can be drawn from Sir *Isaac*'s Argument, but the *contrary*.

For he saith, That *Birds*, *Beasts*, *Fishes*, *Insects*, *Trees* and *Plants*; on *Putrifaction*, *all of them revert into Water, or an aqueous Liquor again.*

How then doth it follow, that the Water of our *Globe* is ever consumed or diminished, or that it can want any Supply of Moisture?

The Water brought to the Land in Vapour from the *Sea*, we see returns by the Rivers to the *Sea* again; all of it, either before it in part enters other Bodies or after it returns out of them, except such of it that is carried back in Vapour.

The *Smoothness*, *Hardness*, and other Properties of the Corpuscles of Water, seem to render them incapable of the *Cohesion* which is necessary for *Incorporating* with Earth or other Bodies, yet where these Corpuscles are so very few in Number as to lose their *Fluidity*, some of them may rest in other Bodies for a Time, but afterwards either slide out, or are expelled by Heat; or else more of the same *Corpuscles* come to them, and restore them to *Fluidity*: For 'tis not likely they should remain always confin'd by other Bodies, since their *Slipperiness*, *Sphericity*, and *equal* Smallness of their Diameters enables them to pass the Pores of Gold, and where one *Corpuscle* passes, all may pass; some sooner some later, as there are innumerable Degrees of Driness and Moisture.

A Violin is said to require Fourscore Years after the making, e'er it obtains that Degree of Driness that gives its Perfection of *Sound*; and, after all, cannot be supposed perfectly dry, whilst it has Pores permeable to the aqueous Vapour that Floats in the ambient Air: And some such Pores will it have until Time (that Devourer of Things) has destroy'd its Texture, and reduced it to the very same *Earth*, that Water carried in at the Vegetable Roots; which Earth, will then again become as *dry* as when Water seized it, and took it up for the Trees, out which the Violin was made. Moist Wood would grow drier but not lighter, if Water were transmuted in it.

I can see no Reason to think that any Part of the pure Element (or Corpuscles) of Water, is *consumed* upon Vegetation; but rather, that the same Water which serv'd for the Production, *&c.* of one Plant, may afterwards as well serve for other Plants successively, and for all other its Uses as long as the World shall last: Nor do I think there is any Diminution of that Element on our Globe since it was first created, for as much Water going out of some Bodies as goes into others, keeps the Quantity the same, and the Ballance even betwixt it and Earth, without a Necessity of any Supply from *Comets*.

From Sir *Isaac*'s Transmutation-Arguments we may learn, that a Man never ought to depend entirely upon his own, for Support of his own Hypothesis.

Sir *Isaac*'s Death seems scarce a Stronger Proof of his being *Human*, than the whole Contexture of these Arguments is. To favour Transmutation, he says, The Bodies of Animals and Plants on *Putrifaction* revert into Water, or an aqueous Liquor again: But in Favour of the Necessity of Comets, on Account of the Consumption of Water, he says, That those Bodies turn by Putrifaction into dry Earth!

'Tis difficult for the Ignorant to understand the Terms of the Learned, but by this *Aqueous Liquor*, I understand a Mixture of Earth and Water, and suppose a *Saline Tincture* is only a *Term* of the Learned of the same Signification: But that a *Liquor* and *dry Earth* should be the same Thing, is what, I own, I can by no means comprehend.

'Tis certain that by the Consumption of *Water*, Sir *Isaac* doth not mean the *Annihilation* of it, but that it was transmuted into *dry Earth*.

If this were so, an Animal or Vegetable, would weigh as much when Putrifaction had reduced it to *dry Earth*, as it would when living.

Yet, we find, that this remaining *dry Earth*, is only a very small Part of the Weight of the living Animal or Plant.

What then becomes of the Remainder of the whole *Weight* whereof the *living* Bodies consisted?

Why, I suppose, it goes the same Way, that the aqueous Part of the Nourishment of a living Body goes, after a short Stay therein, *viz.* It either perspires into the *Atmosphere*, or sinks into the Ground, all except what remains for Increase of the Bodies, which is but a very inconsiderable Part of the Water, and none at all when the Bodies are at their full Growth, or declining.

I cannot conceive how the *Liquors*, or *Moisture* of our Globe, should ever be all or in any Part *lost* by being *evaporated*, unless it should fly off to some other Part of the Universe, instead of being continually supplied from thence.

Were it not for *Evaporation*, the watry Element would be useless to Vegetables and Animals, except to such as live with Salt-Water in the Sea: For neither Springs, nor Rivers, nor other Fresh-Water would be found on our Globe; or, if so great a Quantity of *Liquor* or *Moisture*, should be transmuted into *dry Earth*, and resupplied from any other Part of the Universe, the Bulk and Diameter of the Earth must continually encrease, and what Consequences such an Encrease might have is above my Enquiry; but, I suppose, the Attraction to the Sun would continually encrease in Proportion to the Access of Matter continually coming to our Globe.

But what Alterations such encreased Bulk and Weight might cause in the *Motion* or *Orbit* of this our Planet, Astronomers only can judge; and I am not informed, that any of them have ever observed any Increase of the Earth's Diameter, *&c.*

As far as this *Hypothesis* of Sir *Isaac*'s relates to Agriculture, I think, we need not fear it, so as to abstain from raising as many Vegetables as we can, there being no Danger of their consuming the Water they imbibe, for in general we have rather too much Water than too little; and it is observed, that three or four *wet* Summers make a *Scarcity*, and many *dry* ones make a Plenty in our Islands; and if it were not the same in other Countries, wet Summers would not cause the Price of Corn here to be treble to what it is reduced to by *dry* Summers.

We have therefore more to fear, than hope, from the Tails of Comets, because the Matter of them mixing with our *Atmosphere*, would be likely to bring both Famine and Pestilence amongst the Inhabitants of our Earth; the former by the aqueous Part, and the latter by the noxious terrene Exhalations of which, as well as of watry Vapours, the Tails of Comets are supposed to consist.

'Tis allowed that the fine Particles of Earth, *&c.* brought to the Ground by Water enrich the Soil; but yet much Water in the growing Season is very pernicious to Corn, tho' not to Weeds, they being naturally adapted to the Soil, some of them Aquaticks, some Amphibious, and others that cannot bear so much Water, grow on such Lands whereon the Water doth not long remain, but sinks down or runs off very soon.

I may add, that if the intense Heat of actual Fire, in almost 200 Distillations be not able to break the Corpuscles of Water, or destroy their Texture, so as to change that Element into Earth, or any other Matter, there can be no possibility of such a Transmutation from that very small Degree of Heat which Water suffers by the weak Ferment it encounters in the Vessels of Plants and Animals.

P. 17. L. 48. *Shew how vastly the Artificial Pasture of Plants exceeds the Natural.*] A full Proof of this Difference, (besides very many I have had before) was seen by two Intervals in the Middle of a poor Field of worn out St. Foin, pulveriz'd in the precedent Summer, in the Manner describ'd in *p.* 91. Here not only the St. Foin adjoining to these Intervals recover'd its Strength, blossom'd, and feeded well, but also the natural Grass amongst it was as strong and had as flourishing a Colour as if a Dung-Heap had been laid in the Intervals; also many other Weeds came out from the Edges of the unplow'd Ground, which must have lain dormant a great many Years, grew higher and larger than ever were seen before in that Field; but above all, there was a Weed amongst the St. Foin, which generally accompanies it, bearing a white Flower; some call it *White-Weed*, others *Lady's Bedstraw*: Some Plants of this that stood near the Intervals, were, in the Opinion of all that saw them, increased to a thousand Times the Bulk of those of the same Species, that stood in the Field three Foot distant from such pulveriz'd Earth.

Note, These Intervals were each an hundred Perch long, and had each in them a treble Row of Barley very good. The Reason, I take to be this, That the Land having lain still several Years after its Artificial Pasture was lost, whereby all the Plants in it having only the natural Pasture to subsist on, became so extremely *small* and *weak*, that they were not able to exhaust the Land of so great a Quantity of the (vegetable) nourishing Particles as the Atomsphere brought down to it.

And when by Pulveration the artificial Pasture came to be added to this natural Pasture, (not much exhausted) and nothing at all suffered to grow out of it, for about three Quarters of a Year, it became rich enough without any Manure, to produce this extraordinary Effect upon the Vegetables, whose Roots reached into it. How long this Effect may continue, is uncertain; but I may venture to say, it will continue until the Exhaustion by Vegetables doth over-ballance the Descent of the Atmosphere and the Pulveration.

And what I have said of any one Species of Plants in this Respect may be generally apply'd to the rest.

P. 18. L. 43. *Makes a much less Ferment in it, &c.*] But if Dung be throughly ventilated and purify'd before it be spread on the Field (as, I think, all the Authors I have read direct) so much of its Salts will be spent in fermenting the Dung itself, that little of them will remain to ferment the Soil, and the Farmer who might Dung one Acre in twenty, by laying on his Dung whilst fully replete with vigorous Salts, may (if he follows these Writers Advice to a Nicety) be forced to content himself with dunging one Acre in an Hundred.

This indeed is good Advice for Gardeners, for making their *Stuff* more palatable and wholesome, but would ruin the *Virgilian* Farmer who could have no more Dung than what he could make upon his Arable Farm.

For every Sort of Dung, the longer Time it ferments without the Ground, the lesser Time it has to ferment in it, and the weaker its Ferment will be.

The Reason given for this great Diminution of Dung, is, that the Seeds of Weeds may be rotted and lose their vegetating Faculty; but this would be to little Purpose, if according to the Opinion of *Equivocus*, and the lowest Degree of the *Virgilian* Vulgar, Weeds sprung up naturally from the Soil, by Equivocal Generation.

This I am certain of by Demonstration, that let a Dung-hill remain three Years unmov'd, though its Bulk be vastly diminished in that Time, and its best Quality lost, Charlock-Seed will remain found in it, and stock the Land whereon it is laid: For that Ferment which is sufficient to consume the Virtue of the stercoreous Salts, is not sufficient to destroy the vegetative Virtue of Charlock-Seeds, nor (I believe) of many other Sorts of Weeds.

P. 19. L. 40. *A considerable Quantity of it* [Dung] *is so necessary to most Corn-Fields, that without it little good can be done by the old Husbandry.*] The Reader sees how falsely *Equivocus* hath published to the World, that I have asserted in my Essay that Dung is *Useless*.

But though Dung is so necessary in the old Virgilian, Raftering, and *fat crit* Husbandry, yet to most Sorts of Land used in the old and new *pulverizing* Husbandry 'tis not necessary; as it appears by mine, and by the Experience of all Farmers, who being emancipated from *Virgilian* Principles, have made proper Trials: They find as well as I that Dung may be supply'd by an Increase of Tillage.

But I never have said any Thing against the Use of Dung in the Corn-Fields, except where it cannot be procured at all, or when the whole Expence of it is likely to exceed the Profit. 'Tis probable, that in some Places Dung may be had at a lesser Price, than the Increase of Tillage necessary to supply the Quantity of Dung required.

That Dung may be useful when properly applied, I believe, was never denied by any Author, but I cannot be justly charged with being the First who hath thought it not to be absolutely necessary; since we learn from *Hesiod* (who mentioned nothing of it in his Georgics) that the Antient Greeks carried on their Husbandry without Stercoration.

P. 20. L. 11. *To distinguish the very least Degree of Heat from the very least Degree of Cold.*] Water in Wells and Springs is not warmer in Winter than in Summer; it only seems to be so, because our Sense of Feeling is differently affected by touching it, as our Hands and the Air are colder in Winter than in Summer, to a greater Degree than subterraneous Water is.

For want of taking Notice of that Vulgar Mistake, *Equivocus* asserts, that Earth is warmer in Winter than in Summer.

P. 20. L. 38. *Tillage alone, with more Time, can pulverize as well* (as Dung.] This the Experiments of *artificially* pulverizing of the poorest Land, as they are related by Mr. *Evelyn*, fully prove.

And these Experiments are the more to be depended on, as they are made both in *England* and *Holland* by Persons of known Integrity.

This Truth is also further confirmed by those Authors who have found, that High-Way Dust alone is a Manure preferable to Dung. And all these Pulverations being made by Attrition or Contusion, why should not our Instruments of Pulveration in Time, reduce a sufficient Part of the Staple of a dry friable Soil, to a Dust equal to that of a High-Way?

The common Proportion of Dung used in the Field pulverizes only a small Part of the Staple; but how long a Time may be required for our Instruments to pulverize an equal Part, it depending much upon the Weather and the Degree of Friability of the Soil, is uncertain.

I have seen surprizing Effects from Ground, after being kept unexhausted, by plowing with common Plows for two whole Years running; and, I am confident, that the Expence of this extraordinary Tillage and Fallow, will

will not, in many Places, amount to above half the Expence of a Dressing with Dung; and if the Land be all the Time kept in our sort of little Ridges of the Size most proper for that Purpose, the Expence of Plowing will be deminished one Half, besides the Advantage the Earth of such Ridges hath of being friable in Weather which is too moist for Plowing the same Land on the Level.

P. 24. L. 8. *The most sure, wherein to make the Experiment.*] This is the most proper Trial of the Effect of Pulveration by *Pounding* and *Grinding*: but Land may be so Barren, that Plow or Spade may not be sufficient to pulverize it to that Degree, which is necessary to give it the same Fertility, that pounding in a Morter or grinding betwixt marbles (as Colours are Ground) can.

P. 24. L. 13. *Can ever be made too fine by Tillage.*] According to some, this Rule is only general, and not universal; for, say they, there's a Sort of binding Gravel that when it is made *Fine*, will by a sudden Dash of Rain, run together like Mettal; and I have seen the same Accident in a particular Sort of *White* Land, but this very rarely happens to the latter; I never knew it above once, and that was after Barley was sown on it; the Hardness was only like a very thin Ice upon the Surface, which was some Hindrance to the Coming up of the Barley, until the Harrows going over it once or twice broke that Ice or Cruft, and then it came up very well.

I never had any other Sort of Land liable to this Misfortune; therefore can say nothing to the Gravel in that Case, nor how deep the *Constipation* may reach in it, nor what Remedy is most proper to prevent the ill Consequence of it: But if there should be two or three Exceptions out of *one thousand seventy nine millions one thousand and sixty different Sorts of* Earth, *(see Mr. Evelyn's Terra*, p. 2.) 'twill be no great Matter.

But I think these are no real Exceptions against any Degree of *Pulverizing*; for it only shews, that some Sorts of Land, tho' very few, are subject by Accident to lose too soon their Pulveration: And if the Fineness were no Benefit to that Land, such Loss of it would be no Injury to it.

P. 24. L. 24. *The Poorest might produce an equal Quantity of Vegetables with the Rich.*] But then the *Poor* must have this Proportion of Excess of Internal Superficies continued to it, during the whole Time of their Growth, which cannot be done without frequently repeated Divisions of the Soil by Hoing or Manure; else it might require forty Times the Internal Superficies at the Time of Sowing, to keep twenty Times the Internal Superficies) of the *Rich* till Harvest: For although the Rich is continually losing some of its artificial Pasture, as well as the *Poor*, yet by losing this equally, they still draw nearer and nearer to the first Inequality of their Natural Pasture.

But *poor* Land, being lighter, has this Advantage, that it being more *friable* than the Strong, requires less Labour to pulverize it; and therefore the Expence of it is much less, than in Proportion to the Excess of Poorness of its Internal Superficies.

P. 26. L. 21. *Unless the Earth continue moist.*] But when the Earth doth continue *moist*, many transplanted Vegetables thrive better than the same Species planted in Seeds, because the former striking Root sooner, have a greater advantage of the fresh pulveriz'd Mould, which loses some of its Artificial Pasture before the Seeds have Roots to reach it. The same advantage also have Seeds by soaking 'till ready to sprout before they are planted.

To both These the Moisture of the Earth is necessary.

P. 27. L. 47. *Change or retain their Colour sooner or later gradually, &c.*] This Experiment I often made on Wheat drill'd on the Level before I drill'd any on Ridges.

The plowing one Furrow in sandy or mellow Ground makes a Pulveration, which is enjoy'd *first* by those Plants that are the nearest to it; and also delivers them from the Weeds, which, though they may be very few, yet there is a vast Difference between their robbing the Wheat of its Pasture in the Row, and the Wheat's enjoying both that and the whole Pasture of the Furrow also.

P. 28. L. 3. *Fancy it lets in the Drought.*] When Land is become hard by lying too long unho'd, the Plow in turning a deep Furrow from each Side of a Single Row of young Plants (suppose of Turneps) may crack the Earth quite through the Row, and expose the Roots to the open Air and Sun in very dry Weather; but if the Earth wherein the Plants stand be fine, there will be no Cracks in it: 'Tis therefore the delaying the Hoing too long that occasions the Injury.

P. 29. L. 51. *The Vines of low Vineyards, &c.*] From these I took my Vineyard Scheme, observing that indifferent Land produces an annual Crop of Grapes and Wood without Dung; and though there is annually carried off from an Acre of Vineyard, as much in Substance as is carried off in the Crop of an Acre of Corn produced on Land of equal Goodness: and yet the Vineyard-Soil is never impoverished unless the Hoing-Culture be denied it: But a few Annual Crops of Wheat, without Dung, in the common Management will impoverish and *emaciate* the Soil.

I cannot find either in *Theory* or Practice any other good Reason for this Difference, except that the Vineyard-Soil is more pulveriz'd by Hoing; and not exhausted by so much more than a competent Quantity of Plants, as the Corn-Fields in the common Management are: For to speak moderately, these are exhausted by above ten Times a competent Number; and if their Barley-Plants were such as the *Equivocal Society* mention *(in Advertisement to April,)* by 17990 Plants more than are absolutely Necessary to produce a common Crop at a ten-fold Increase, supposing their Relation of that monstrous Plant to be true: Or if it be true, that one Grain of *Smyrna* Wheat produced 9792 Grains at one Crop, 15 such monstrous Plants on each square Perch might produce 48 Bushels on an Acre; for the Grains of each Plant would weigh 20 Ounces Troy: And of all Sorts of Wheat that I have observed, the largest Ears, have the largest Grains (unless blighted) tho' the Ear doth not follow the Proportion of the Straw, but of the Nourishment.

I confess, I scarce believe the *Society* or their Authors, in their Relation of Plants so prolifick; and therefore it must be no Rule for our Number, which may be above twenty Times greater, of that or any other Species of Corn; the Plants may be competent to produce more than a common sown Crop, and yet not exhaust an indifferent Soil, more than may be supply'd annually from the Atmosphere (as the Soil of Vineyards is) with the Help of the same Hoing-Culter.

But it is no wonder that such a vast unnecessary Number of Plants, that are seen in sown Corn, should exhaust a Soil, and make Dung or Rest necessary to repair that unnecessary Exhaustion.

The Vine indeed has the Advantage of being a large perennial Plant, and of receiving some Part of its Nourishment below the Staple: But it has also Disadvantages; the Soil of the Vineyard never can have a true Summer Fallow, tho' it has much Summer Hoing: for the Vines live in it, and all over it, all the Year: neither can that Soil have Benefit from Dung, because tho' by encreasing the Pulveration, it encreases the Crop, yet it spoils the Taste of the Wine: The Exhaustion of that Soil is therefore supply'd by no artificial Help but Hoing:

Hoing: And by all the Experience I have had of it, the same Cause will have the same Effect upon a Soil for the Production of Corn, and other Vegetables, as well as upon the Vineyard.

P. 30. L. 38. *This will determine the Depth at which the most Seeds will come up.*] In the Common Way of Sowing 'tis hard to know the proper Depth, because some Seeds lying deep, and others shallow, it is not easy to discover the Depth of those that are buried: But I have found in drilling of black Oats, that when the Drill-Plow was set a little deeper for Trial, very few came up; therefore 'tis proper for the Driller to use the *Gages* for all Sorts of Seeds; for if he Drills them too deep he may lose his Crop, or if too shallow, in dry Weather, he may injure it, especially in Summer Seeds; but for those planted against Winter, there is the most Damage by planting too deep.

P. 31. L. 29. *The stale and hard Ground.*] Stale Ground, is that which has lain some considerable Time after Plowing, before it is sown, contrary to that which is sown immediately after plow'd; for this last is generally not so hard as the former.

P. 32. L. 50. *Somewhat narrower for constant Annual Crops of Barley, &c.*] Now upon further Experience, I chuse Ridges of five Foot and a half; or if the Land be rich, five Foot Ridges for constant Annual Crops of Barley and of Oats; but narrower for a single Crop, *i. e.* when the following Crop is to be sown on the Level.

P. 32. L. 53. *But he that drills Barley must resolve to reap it, &c.*] He must also take Care that the Barley be not such as *Equivocus* relates in *p.* 199. of his *Essay* for *August*. "Good Barley where the Ear has "been equal in Length to the Straw it grew on." For such would be very difficultly reaped, unless the Ears were a Foot long.

Ibid. *Bind it up in Sheaves.*] But 'tis now found that in a wet Harvest, the best Way is not to bind up drill'd Barley or Oats; but instead thereof, to make up the Grips into little Heaps by Hands, laying the Ears upon one another inwards, and the *Stuble-Ends* outwards, so that with a Fork that hath two Fingers and a Thumb, 'tis very easy to pitch such Heaps up the Waggons without scattering, or wasting any of the Corn.

'Tis also seen that when the Reapers take Care to set their Grips with the But-Ends in the Bottoms of the Intervals, and the Ears properly on the Stuble, they will so stand up from the Ground, as to escape much better from Sprouting, than mow'd Corn.

P. 36. L. 48. *Were the most cormorant Plant of them all to be commonly ho'd, it would gain, &c.*] But this must be intended of the deep Horse-Hoing; for Turneps that stand for Seed are such Devourers, and feed so long on the Soil, that tho' they are Hand-ho'd, such a shallow Operation doth not supply the usual Thickness of those Plants, with Pasture sufficient to raise their Stems to half their natural Bulk; and they leave so little of that Pasture behind them, that the Soil is observ'd to be extremely impoverished for a Year or two, and sometimes three Years after them; but 'tis otherways with my Horse-ho'd Turnep-Seed; for I never fail'd of a good Crop of Barley after it, sown on the Level in the following Spring, tho' no Dung hath been used on the Land where the Turnep-Seed grew for many Years. And also my Barley Crops thus sown after two sucessive Crops of Turnep-Seed without a Fallow between them, are as good as those sown after a single Crop of it. For I have several Times made these Turnep-Seed Crops annual, that is, to have two Crops of it in two Years, which would in the old Way require three Years, because this Crop stands about a Year on the Ground, and is not ripe 'till Midsummer, which is too late to get that Land into a Tilth proper to plant another Seed-Crop on it the same Summer; neither can the Soil be able to bear such another Crop immediately after being so much exhausted, and unplow'd for a whole Year, except it be extraordinary rich, or much dunged: However two Crops of Turnep-Seed immediately succeding one another, is what I never knew or heard of, except my own that were Horse-Ho'd; and of these the second Crop was as good as the first, their Stalks grew much higher than they usually do in the Common Way, and tho' the Number of Plants was much less, their Produce was so valuable, that the *Vicar's Agent* declared, he made twenty Shillings *per* Acre of his Tythe of a whole Field which he tythed in Kind. The Expence of these Crops was judged to be answered by the Fuel of the thresh'd Stalks. It must be noted, that the extraordinary Value of these Crops arose, not from a greater Quantity of Seed than some common Crops; but from their Quality, Experience having brought this Seed into great Esteem, on Account of its being perfectly *clean*, and produced by large Turneps of a good Sort and of a proper Shape; for those that are not well cultivated are very apt to degenerate, and then their Seed will produce Turneps of a small Size, and of a long *Rapey* ill Shape.

P. 39. L. 8. *As Wild Oats, &c.*] Wild Oats, *&c.* I have not try'd by sowing them in a Bed my self, but have been so inform'd by others; and my own Experience hath frequently shewn me, that they will come up, after lying many Years in the Ground: and that very few Sorts of Weeds will come all up the first Year as Corn doth: if they did, the Tillage of one Year's Summer Fallow might extirpate them.

P. 39. L. 25. *As Thistles.*] The best Way to destroy them is to pull them up, Roots and all, out of the Rows whilst they are young.

P. 39. L. 36. *Except such as come in the Air.*] And except also such Weeds, whose Seed is carried by Birds, which is the most common Manner of transporting the Seeds of Vegetables from Field to Field, against the Consent of the Owner: for Birds, whether great or small, do not care to eat their Prey where they take it, but generally chuse some open Place for that Purpose. 'Tis, I am perswaded, by this means chiefly, that a Vineyard or Field made ever so clean from Grass, will, in lying untilled a few Years, be replenished with a Turf of that neighbouring Species of Grass, which best suits the Heat and Moisture of the Soil: yet there are some Species of Seeds that Birds (at least such as frequent the Place) do not affect: else the Burrage-Weed (mentioned *in the same Page whence this Note is taken*) would have appeared again in my Field in some of the many Years since the Hoing has extirpated it there: for it grows plentifully in the unplowed Way adjoining thereto.

P. 39. L. 39. *Demonstration of* Malpighius's *Experiment.*] I never heard, that any Author has been dissatisfy'd with this Experiment, except *Equivocus*, who (unless my Memory deceives me) has falsely quoted it: for he leaves out the latter Part of it, *viz.* that when Seeds were put into the Glass, *that* Earth produced them into Plants very soon.

His Objections against the Fairness of this Experiment are two, *viz.* That the *Lawn* (I think it was) deprived the Earth of some Part of the Powers, that he affirms would produce Plants *equivocally*. And that the Time the Earth was in the Glass was not sufficient for the Effect of those Powers.

For Answer to the first Objection: What he calls a fine Linnen Cloth was only to keep out Seeds from being convey'd into the Glass by the Air. The Sun's Influence was rather encreased by the Refraction

through the Glass: Air Rain, Dew and all Sorts of Particles of the Atmosphere might enter through the Lawn Cover: and 'twas plain, that nothing was wanting for Production but Seeds, which, when they were thrown in, were produced with no other Helps, than the Earth had whilst nothing was produced. And we see Plants come up under a North Wall from Earth whereon the Sun doth not shine: and even in Places, where there is not so free an Air, as that Earth in the Glass enjoy'd.

As, to the second Objection: *Equivocus* owns the Glass stood a *long* Time: but it seems it was not *long enough* for the Earth in it to produce Plants without *corporeal* Seeds. I would have him let the World know, how *long* a Time he requires Earth to remain in that Manner for determining that Point against him.

Equivocus seems to object against that Experiment for the Fairness of it: and to shew how much he abhors every fair Experiment, that discovers Truth, he quotes most unfair ones against it.

His First I observe of this Sort, is, That when Earth taken out of Cellars, and exposed on the Top of a House, Plants such as grow in the Neighbourhood, will come up in it. What can be hence inferred in Proof of *Equivocal Generation*, unless we were sure, that no Seeds of those Plants were in that Earth when in the Cellars; and unless the Top of the House were so high as to be above the Reach of Winds and Birds that could carry Seeds thither?

The Wormwood coming up amongst the Rubbish is no fairer an Experiment than his other; for though it came up in the *Spring*, when there are no Seeds to shed: yet the Seeds might be carried thither in the Autumn or in the Winter, for *Wormwood* holds some of its Seed even in Winter, when some Sorts of Birds (as *Goldfinches*) being hungry take it out, and sometimes carry it off to eat it, and love to peck it on dry Ground; and the Rubbish of a House seems a proper Situation for their feeding on it; and they generally leave some Seeds behind them in such Places; and yet *Equivocus* is so vain as to affirm, That "*this is a* "*plain Instance, that those Plants did not derive their Original from* real Seed."

As to his Instances of Mustard-Seed, Furz, Broom, Charlock, and innumerable other Species of Plants which might be found, which *Equivocus* and some of the most ignorant of the Vulgar, imagine to be produced from a fortuitous Concourse of Particles, and not from *real corporeal* Seeds; they are answered by *Equivocus* himself in his *Essay of May*, *p.* 60. as follows: "That there are many Seeds which lie long in the Ground "without any visible Signs of Germination is not to be disputed." And I see no Impossibility against their having lain so from the Deluge, if not from the Creation of the World (I mean such of them as lie deep in the Earth, and have never been exposed to the Sun, Air, &c.) however, there is a less Impossibility of that, than of their being generated by a fortuitous Concourse of *Atoms* or Particles.

A Seed that by its Smallness, is invisible to the naked Eye, contains in it an almost infinite Progeny of its own Species, and is a little World, whose Creation is as miraculous a Work of infinite Wisdom as the great World; and One might as well be produced by a *fortuitous* Concourse, &c. as the other.

Nature is regular and geometrical in all her Works; hence each Seed produces no other Species of Plant but its own; but blind Chance is irregular, and if 'twere possible for it to produce a Plant, it would be of some other Species than those produced from Seeds; therefore, I think, no reasonable Man can suspect any Plant to be generated by a *fortuitous* Concourse of Particles, unless he is satisfy'd of its being a new Species that never appeared in the World before it: Neither would any two *equivocally-generated* Plants be of the same Species, not being the Offspring of Parents proper to each.

Indeed in this Respect of Singularity (Falshood, Ingratitude and Inhumanity) different from the Common Species of Men, *Equivocus* himself seems a stronger Argument for Equivocal Generation, than any he brings: And as he founds his Faith of that blind Doctrine on the Opinion of Heathen Authors, who held it the same for Animals as for Plants, and that many of the former were generated from Putrifaction and Corruption, there seems no *fortuitous* Concourse of Particles so likely to have produced *Equivocus*, as of such an unfavory Composition mentioned in his *Essay* of *April*, *p.* 72, 73, 74. He says, "*Ordure Dung* and *Air* "actuating on one another may produce, &c. — I say, *Sterquilinium Equivocum*.

That Mushrooms are generated without Seed in the Manner pretended, from rotten Dung that smells of Mushrooms, is a very fallacious Account, since they are known to bear Seed in their Gills; and the *Paris* Gardeners rub old dry Mushrooms on the Dung, which produces the young ones; by such Rubbing the Seed comes out of the Gills.

And when *Equivocus* in his *Essay* of *Aug. p.* 180. describes the Manner of making a Mushroom-Bed, he directs, That it be set with Cakes of Dung that smell like Mushrooms, and then he says there will afterwards "come up Mushrooms enough, especially if the Earth of the Mushroom-Bed be watered with the Wa-"ter wherein Mushrooms, which spring up plentifully every where in *September* are washed."

Here *Equivocus*'s lower Class of Readers must renounce their Senses, as well as their Reason, in Order to free themselves from all Suspicion of Mushroom-Seeds being in those Cakes, or in that Water, before they can be able to perceive the Cogency of his Arguments for the equivocal or fortuitous Generation of Plants, without real corporeal Seeds.

As neither *Equivocus*, nor any other Advocate of this blind Doctrine, make any Distinction between the Generation (or Production) of Plants that bear a *large* Seed, and those that bear a *small* Seed, I hope, it may be sufficient to convince them of their Error, if it can be demonstrated, that Plants which bear a *large* Seed are not produced *equivocally*: for which Purpose, let an Experiment be made, which shall not be liable to the Objections *Equivocus* makes (tho' I think unjustly) against that of *Malpighius*, in the following Manner, *viz.* Let there be a very fine *Wire Sieve*, such as is used to sift *Tobacco*, through which let be passed what Quantity you please of Earth of any Sort, and from any Country: set it without a Cover in the open Air where no Birds come, especially great Birds: and this may be in some Place where People are always present in the Day-time; Let it thus stand a whole Year, or as much longer as you will, and stir it as often as you think fit: then if no Bean, Pea, Fir, or other Plant, bearing such a *large* Seed appear in it: or in Case Small-Birds are kept from that Earth by a Net, or otherwise, then if no Plant, the smallest of whose Seeds are too *large* to pass the Meshes of that Sieve, come up, I believe, every Man of Sense will be confirmed in the Doctrine of *Univocal* Generation of all Vegetables.

Note, There is no Occasion to make this Trial of such Plants whereof the *real corporeal* Seeds, or their Husks, at their coming up, may be discovered by the naked Eye, or by Help of a *Microscope*, as they may be at the first Coming up of most Sorts of Plants.

Many

Many more Arguments might be brought against *Equivocus* on this Point; But *absurdas opiniones accuratius refellere stultum est*. And I think no Opinion can be more absurd than this of *Equivocus*.

P. 40. L. 5. *Remarks on the Bad Husbandry that is so finely expressed*, &c.] *Equivocus* exclaims against me horribly for this; but I hope 'tis without any Reason: He is not content with the Word *finely*; but adds *judiciously*, as if Bad Husbandry could be judiciously express'd. I defy him to shew any Place in my Book, where I have said an injurious Word against the Poetry of *Virgil*, or where he finds that I have said, "*That* "*there is not a good Line in all* Virgil's Works *that relate to* Husbandry; *or that they are fit for nothing but to* "*be laid on a* Hand-Barrow, *and thrown into* the Fire." Which he has had the Face to affirm in his *Dedication* to my Lord *Lonsdale*. I am sure I never said, or thought, there was one Bad Line in all *Virgil*'s Works; but the Praise due to the *Prince* of *Poets*, is, I think, in respect of his *Poetry* only.

P. 40. L. 8. *Primis extemplo a Mensibus anni*, &c.] This is *good* Husbandry, which I must maintain against *Equivocus*, who in his Directions to his reading Farmers tells them, in his *Preface* to *September*. That 'tis Time enough to *break up* Strong Land in *Britain*, in *May* or in *June*, whereas *Virgil* directs it to be done in *January* or *February*. And what we esteem Strong Land in *Britain*, being much Stronger than the *Italian*; and our Climate being more subject to Rains, our Land should not be *broke up* later than theirs. And our most experienced Farmers find it a less Expence, and infinitely more profitable to *break up* their Wheat-Land in *Winter*, (being the same Time that *Virgil* calls the *Spring*) they say this first Plowing, and a second in Summer, cost them less than One first Plowing (or *Breaking up*) in Summer, when the Weather is dry. By the former Method, they never fail of a sufficient Pulveration, and to kill the Weeds; but in the latter, 'tis as uncertain as the Weather, which often disappoints them, but the former never doth, according to that excellent Verse of *Hesiod*.

Εἶναι πολὺν ὄρχον· ὀρχῷ δὲ τεμνέμεν οἶ κ' ἀπαντᾷ.

The Consequence of This *early Fallowing*, is to require more *Iterations* (or *Stirrings*) than there is Time to perform properly, on Land *broke up* in the Summer; and this is the chief Benefit of early Fallowing; and is so found, by all who practise it, as many do of late, Plowing five or six, and some seven Times, instead of one or two, on Light-Land, and Sandy-Land. But *Equivocus* says, in *Advertisement* to his second Volume, That '*tis the Custom to plow* once *some* twice *and others* three Times at the most, *in the stiffest* Land.

All Farmers of my Acquaintance that are eminent for being *good Husbandmen*, and have practised from their Youth to old Age, declare they are very certain, they have many Times been at great Loss by plowing their Land too *seldom*; but never lost by plowing any Sort of Land too *often*. This is from long Experience; and I take it, is what *Virgil* means in Strong Land; and is undoubtedly *good Husbandry*, which no body contradicts, except *Equivocus*, as above.

'Tis the Bad *Theory* of the *good Husbandry* in Strong Land, that occasions his Bad *Husbandry* in Light Land; for if the Effect of Pulveration were generally known (as it may be demonstrated) to procure and enlarge the Pasture of Plants, instead of only Killing Weeds, which is only accidentally done by Pulveration, it having its chief Effect, even where no Weeds are, I say, if this were known, it could not be deny'd, That Pulveration is at least as necessary, (and in a greater Degree) to poor Light Land, as 'tis to Strong and Rich. And 'tis the Custom in the South of *France* to plow up their Light Land in the Winter, pulverizing it by frequent *Iterations* in the Summer; and this is done in *Languedoc* on Land so Light, that I have seen it plow'd (for Wheat) by a Plow drawn by a single Ass.

P. 40. L. 17. *The Old Theory which never gave any other Reason*, &c.] The *Equivocal Society* having ransack'd their old Heathen Authors to find other Reasons, pretend Pulveration to be one; 'tis indeed an Effect of *good* Tillage; but is no more a Reason for it, than changing the Under and Upper Sides of the Furrow is the Reason for Turning it; and the *Society* say *Pulveration* is Poison to Light Land. What they say of the Advantages of Summer-Fallowing being another Reason for Tillage, is no better, since such Fallowing is only good Tillage, not a Reason for Tillage. I do not perceive that they offer any other Reasons; if they had any they would have produc'd them in Contradiction to what I have said in my *Essay*.

P. 40. L. 20, 21. *At si non fuerit Tellus fœcunda sub ipsum.*
Arcturum tenui SAT ERIT *suspendere sulco.*

When poor Land is plow'd late, there is not Time enough to plow it so often as Reason requires; because there must be a competent Exposure between the Plowings; and the poorer it is, the more Plowings (or something else) will be necessary to pulverize it; and also such Land generally being on a high Situation, must be sown early, or the Wheat will be in Danger of dying in the Winter; therefore upon all those Accounts, it should be earlier plowed than Strong Land; besides for the Killing of Weeds, which is impossible to be done in any Sort of Land, by such Tillage as doth not move and turn it often enough to make them all grow, which *once plowing* never can.

Equivocus is against pulverizing this Land because he thinks it would make it too hollow; but in Truth, the contrary of his Opinion is true, because Pulveration makes its Natural Pores *less*, and its Specifick Gravity *greater*; and this *Equivocus* might have learnt of *Virgil* himself, if his Malice would have given him leave to enquire; for *Virgil* in his *2d Georgic*, relates an Experiment, which fully contradicts this his own Precept, for *dig a Pit or Hole in Light-Land, and the same Earth which comes out of it, will not fill it up again*. Therefore it filling Less Room (by the Breaking) it is a Proof of its Specifick Gravity being increased.

He says in Page 13 of his Advertisement to his second Volume, "If the Soil was naturally *Light* and "Hollow, over much Plowing, or Pulverizing of it, would be not only needless, but also destructive "to it."

In this *Equivocus* is right; because *too much* Plowing or Pulverizing is impossible, unless where it is fear'd the Soil should become too *rich* for the Sort of Vegetable therein to be sown.

'Tis insufficient Tillage only, that makes Light Land become more (Hollow and) Light, upon two Accounts; First, as it doth not sufficiently diminish the Size of its *Natural* Pores, the Largeness of which is the Cause of its (Hollowness and) Lightness; for the Size of none of these can be diminished, but by breaking their Partitions, few of which are broken by *insufficient* (i. e. *Virgilian*) Tillage. Secondly, it becomes

Lighter

lighter on Account of the Size of its *Artificial* Pores, which by *insufficient* Tillage, are made large in Proportion to the Degree of *Insufficiency*; but on the contrary, *sufficient* Tillage makes the *Artificial* Pores very *small*, and diminishes the Size of the *Natural* Pores, in Proportion to the Degree of that Smallness of the *Artificial*.

Equivocus says, that in the *West*, "They never plow their Wheat Lands in the Summer, nor till they are "ready to sow them, well knowing that if they were to Summer Fallow them, it would cause the Ground to "produce nothing but *Charlock*, and several other Weeds of that kind, which are all of them the indelible "*Criterions* of Poverty.

But in Truth these Weeds are only *Criterions* of the worst Sort of *Virgilian* Husbandry; for they grow much stronger and *larger* in *rich* Land; but this is earlier and oftener plow'd, whereby the Charlock Seeds, *&c.* grow and are kill'd, without stocking the Ground with their *Species* as they do in *Poor* Land that is plowed late and but *once* or *twice* where all or most Weeds that grow, are sure to live and propagate.

I remember to have formerly seen my chalky *Clivi* look all over yellow with blossomed Charlock, to which they were very subject when in the Hands of a *Virgilian* Tenant, but since they have been a few Years used in my hoing Tillage, very little Charlock appears in them: Nor is there any more Charlock on my Hill whose second *Stratum* is Clay, which about twelve Years ago had the thickest and largest Crop of it that ever I saw: The Seed was ripe, and stood all the Winter, and was shed on the Land to fill it fuller, yet a few Years of my Potatoe and Turnep Management totally extirpated the Race of Charlock from thence also.

Charlock therefore is neither *equivocally* (which *Virgilians* term naturally) produced, nor is it an indelible *Criterion* of Poverty; for this Hill since it has been made dry, appears by the Crops of all Sorts it produces, to be the *richest* Field I have.

Charlock and other Weeds may be a Cause of Poverty; but never can be an effect of it, in any Soil whatever

Equivocus is wrong to infer that this Western Husbandry is not Virgilian, because he thinks the Farmers there never so much as heard of *Virgil's* Georgics, when the praised Commentator, proves it to be so from the *Latin* Words used among Husbandmen of that Country in their rustick Affairs.

Equivocus in his last quoted Page and in his two next following it, pretends to bring this Opinion of mine concerning Pulveration to the Test, by what he most childishly calls an Experiment which is only this, That there is a Sort of hollow light Land about *Wilcot* (a Place I do not know) in the County of *Wilts*, part whereof being well *limed*, produces much better than adjoining Lands of the same Sort not *limed*. And from hence infers that Pulveration is Poison to some Soils.

But whether this Argument be a Test of my Opinion or rather a Test of *Equivocus's Understanding*, I leave to the Determination of the sober Reader; and whether inveterate Malice may not so operate on the Fibres of a wicked Man's Brain as to make him become a *mente Captus*.

This Test which *Equivocus* proposes, could prove nothing to the Purpose: But if any one will be so curious as to see a Test of it, he may go to *Fiddleton*, and several other adjacent Parishes not far from *Wilcot*, and within eight or ten Miles of the *Devizes* in *Wiltshire*, and he will be convinced (by the present Practice there) of the Benefit of pulverizing Light Land: He will see thousands of Acres that were Time out of Mind, until within these last twenty Years, kept in the *Once-plowing* Husbandry, now vastly improved by Pulveration with frequent Plowings; they have there proved by Practice what I have demonstrated in *Theory*, *viz.* That light Land requires more Plowing than strong Land; They say also, That the *Summer-Sun*, and *Summer*-Plowings are of greatest Benefit to light Land: They further say, That the longer it is kept in that Pulverizing Way, the more fruitful it grows. These Lands were formerly sown (alternately) every other Year upon *once* plowing, as the rest of the Neighbourhood yet are; but now these are sown three Years successively on frequent Plowings, and are of double the Value to what they were formerly, and to what the other adjoining Lands of the same Nature unpulverized in the *Virgilian* Method are.

Five Years, whereof the three first are sown and the other two unsown, are called a Round; and they find that every successive Round the Land grows better and less light, which proves that the *Antivirgilian* Pulveration in Time, destroys, or at least abates that pernicious *Leaven*, which was the Cause of the (Hollowness or) Lightness, and encreases the Cement of the Soil, as the Superficies of its Parts are frequently encreased.

Though the Staple of this Land may be too thin to acquire the Name of *strong* Land; yet it loses so much of its Lightness, that it *subsides* sufficiently after sowing, but not too much.

The Substance of this Relation I had from a Gentleman of Honour, Learning and Integrity, who was the first who put the pulverizing Husdandry into Practice in that Country, upon a large Estate of light Land.

In *Gloucestershire* also which is a western *County*, I am well inform'd, that great Quantities of very light Land, which when kept in the *Sat-erit-Husbandry*, were *Let* for half a Crown an Acre, but being now brought into the pulverizing Method, are *Let* for ten Shillings an Acre.

But there is a Misfortune in many Parishes, that the Custom doth not permit any one to pulverize his light Lands by Tillage, until an *Inclosure* be made of them.

Full Experiments of this *Doctrine* have been made in *Hampshire* too, and in other Places which shew the bad *Theory* and Practice of *Virgilians*.

And to confute the *Sat-erit* Maxim of *Virgil*, even the Practice of the Parish where I live, is sufficient. The greatest Part of the South Side of it is light Land, formerly Downs, and on the North Side, is poor sandy light Land formerly a *Heath*: In this they always sow'd their Wheat on *once* plowing, 'till within these last twenty Years: 'Twas about seventeen Years ago, that I was walking with a Farmer in this Part, and saw on one Side of a Hedge a little Field in the Occupation of a Gentleman, who had fallow'd it early, and plow'd it three or four Times afterwards, and sow'd it with Wheat without Dung: On the other Side of the Hedge was a Field sown with Wheat on *once* plowing, according to the old Custom well dung'd; 'twas then near Harvest, and the Farmer judg'd the Crop of the *Antivirgilian* Field at four Quarters to an Acre, and the other at two Bushels, or three at the most; and I afterwards found, that he was right in his Valuation of those different Crops. He said the Field which had the poor Crop was always accounted the better Land of the two, though of the same Sort: He said too that his late Father used to observe that this Custom of *once* plowing did never produce so good Crops as the same Sort of Land did in places where it was the Custom to plow often; and the Farmer himself could remember fifty Years, and never found their *once* plowing succeed well. I then

then asked him the Reason why they continued such a bad Custom, which was never known to succeed. His Answer was, *viz. We are still in Hopes.*

But that Custom is now so entirely worn out, that I do not believe, there has been an Acre of Wheat sown upon *once* plowing these ten last Years in this Parish, which is a large one, lying in two *Counties*.

The South Side of the Parish being very high *Down Land* was reckoned too poor and too light for Wheat. They thought with the *Virgilians*, that much Plowing would make it yet lighter; therefore they used generally to sow it with Oats on *once* Plowing, and to let it lie unsown more Years than sown. But now they are convinced of that Error, and *Till* the same Land as much or more than their strong Land, of which the Middle of the Parish that lies in a Bottom consists (though 'tis not my Fortune to have any of it.) And that light Land is within these last Twenty Years so much improved by thorough good Summer Tillage, that it produces rather better Crops of *Wheat* and *Barley*, than their rich low Land doth; 'tis not therefore become lighter or poorer by Pulveration, but more dense and richer.

The *Virgilian* Error in this Matter seems to be their mistaking Exhaustion for Pulveration; for when they sow upon *two* or *three* Plowings, which are insufficient for light Land, (especially whilst full of Weeds,) the Exhaustion may be greater, than in Proportion to such Pulveration, and then the Land must become poorer: This Effect, which is owing to Exhaustion only, they falsely impute to Pulveration; for 'tis demonstrable both in *Theory* and Practice, that no Land can become *poorer*, unless the Exhaustion exceeds the Pulveration of it; nor *richer*, unless the Pulveration exceeds the Exhaustion.

When a well-tilled Field is to be sown with Corn for three Years, leave one Land in the Middle of it unsown, pulverizing it by the Plow very often, and suffering no Vegetable to grow in it for the first and second Years, but the third Year, let the whole Field be sown alike. Then if this third Crop be poorer than the Crop of the pulverized *Land* in the Middle of it, (as it certainly will) 'twill be evident, that the Poverty proceeds from the Exhaustion, and not from the Pulveration.

'Tis also demonstrable, That light Land requires a greater Degree of Pulveration, than strong Land, when the Exhaustion of both is equal.

In answer to the Ridicule of *Equivocus* in *p.* xv. *of the Advertisement to his 2d Vol.* about Pulveration, being no *Catholicon*, I say, it may be proved so far a *Catholicon*, that it enlarges and enriches the vegetable Pasture (and if made by the Plow) kills Weeds, and diminishes the too great specifick Gravity of strong Land; encreases the too little specifick Gravity of light Land: It retains competent Moisture, but not too much Water: (if in proper Ridges) it lessens the Labour of Cattle, by causing the Plow to go more easily in strong Land.

If *Virgil* gives no other Reason for Tillage but the killing of Weeds (as I think he doth not) and yet in his SAT-ERIT directs the plowing of poor Land in such a Manner, that Weeds cannot be killed, but rather propagated and strengthened by it, how can there be a worse *Theory* than *Virgil's*? And would it not be wonderful, if the Equivocal Society were what they pretend to be, that they should not give some Reason why Pulveration kills Weeds in strong Land, and breeds them in light Land, as they assert it doth? But that Assertion is so far from being true, that Pulveration by the Plow more easily kills an equal Number of the same Species of Weeds in light Land than in strong, because the former being more friable, the imprisoned Seeds are sooner set at Liberty to grow in it, in order for their Destruction. Some Sorts of Dung encrease Weeds, no Sort of Dung or Manure kills them, yet the *Virgilian* in light Land, wherein Weeds most abound, uses much Dung and very little plowing.

P. 40. L. 26. *Sterilem exiguus ne deseret humor arenam.*] However this Reason may hold in other Countries, 'tis certainly wrong in *England*; for all Experience proves, that the more such dry light Land is pulverizd by *early* and frequent Plowings, and the *deeper* the same pulverizd Mould is, the better the Corn that grows on it will endure a *dry* Summer.

By Experience, I do not mean the Experience of these *Virgilians*, who know not what Pulveration is, believing that twice or at most thrice plowing is the utmost that Tillage can do, the Notion of *infinite* or *indefinite Division* being to them unintelligible and ridiculous.

I have been informed by a Hill Country Farmer, who had Learning enough to so far ballance the common Prejudices of his *Virgilian* Education, that he for many Years managed part of his *dry* light *Downe Land*, in the same Manner that common good Husbands manage their strong Land, *viz.* he plowed it three or four Times singly dung'd with the Fold, and one Bushel and a Half of Seed Wheat sown on an Acre: The other part of the same Land managed in the old *Virgilian* Method, *viz.* plowed once, more dunged, and four Bushels of Wheat sowed on an Acre: which greater Quantity of Dung and Seed were much more chargeable than the other: But the different Success of these two Managements was, that every dry Summer, the *Virgilian* produced miserable poor Crops, and the other very good ones: but in wet Summers the *Virgilian* Crops were better than the Tilled Crops, which were too big and lodged. Not to bring in Question, whether the Lodging might not have been prevented by yet more lightly Folding; 'tis by this Experiment very plain, that the more this dry light Land is pulverized, the more Moisture it retains in Summer. This Farmer is yet living, a Man of Credit, and can easily make appear the Truth of these Facts; and I have myself always observed the same Effect of Pulveration in regard to Moisture, on all Sorts of Land with which I have been acquainted, at what Times soever they were sown or planted.

And this Moisture obtained, or rather retained by Pulveration, whether from Dews or Rains, is never injurious: For as pulverized Earth holds a small Quantity of Water longer than the *Sat erit* Tillage doth, so it suffers Water, when in too great Quantity, to descend or exhale sooner from it. The Lodging of the abovementioned Crops on that very dry Land, must not be imputed to too much Water, but rather to too great a Number of Plants, or other Causes.

P. 40. L. 33. *The* Sat-erit *is therefore a great Mistake.*] But 'tis only the Mistake of *Virgilians*, and of such Vulgar who (as *Equivocus, in p.* 2. *of April*, says of the *Lower-Class of Readers*), "are not able to dis-"tinguish Truth from Error, or Right from Wrong." 'Tis these only are they, who cry, *'Tis enough*, when their Land is plowed *twice*, though it hath thereby attained no competent Degree of Pulveration, but such as serves only to set some of the Weeds a growing, which being *ripe*, shed their Seed; which being afterwards plowed in and few of their Breed killed, composes a considerable Part of the Staple of their Lands; yet when they come up thick at their *once* or *twice* plowing for their next Crop, they fancy the same Species are produced *equivocally* without *real corporeal* Seeds; and then they say, 'tis plowing that breeds Weeds, which is because they plow often enough to make some of the Seeds (of which the Soil is very

ry full) grow; but not often enough to kill them when sprouted. If the Lands of *England* were all in such Vulgar Hands, those three Syllables *Sat erit* would be, I suppose, a Loss of three Millions Sterling yearly to the Publick.

It seems absurd to be so sollicitous for laying Dung upon Land to which Pulveration is thought to be Poison: When the Effect of all Sorts of Dung is to pulverize more or less in Proportion to the Quantity of Salts therein contained.

That this is an Effect of those Salts is so evident from the Demonstration of every Experiment, that, I believe, no body ever did deny it: but whether they have any other *considerable* Effects upon a Soil is uncertain, for the Warmth occasioned by their Ferment cannot be *much*, and the Addition made to the Staple by the Subsistance of the usual Quantity of Dung of any Sort is very *little* when reduced to Earth.

The Truth on't is, such poor light Land requires a considerable Quantity both of Dung and of Tillage to pulverize it, in Proportion to the Degree of its Poverty. The Virgilians judging otherwise, leave out the Tillage, and add more Dung than is usual in any other Species of Husbandry: The Consequence of which Practice is, that much the greatest Part of this Land must lie still, at the Value of about 2 *s.* per Acre, for keeping of a vast Number mostly of dry Sheep for doubly dunging of the small Remainder, which also must not be often sowed, and produces commonly very light Crops: But, as I am informed, when Farmers of a Religion (or rather Education) different from those *bigotted Virgilians*, come amongst them, they leave out Part of the Dung, and add more Tillage, sow less Seed, and by a competent Use of each, raise better and more Crops, making a great Improvement on those Lands, which by the Virgilian Husbandry are of little Value.

None of the Improvements made on any Sort of arable Land by Foreign Grasses, or Turneps, could have been introduced into *Britain* without renouncing the *Sat-erit* Doctrine of *Virgil*: for they will not succeed on any Sort of Land without Pulveration by Tillage; and they are most generally made on light Land; and therefore may be properly called *Antivirgilian*, and so may most Sorts of Hoing Culture for Corn, which are always found very beneficial to the Husbandman, who uses them with Discretion.

Clover doth not improve the Soil by killing of Weeds, as the Vulgar imagine; for in Truth Weeds, especially natural Grass, will kill or spoil the Clover; the Improvement is therefore from other Causes, the Chief of which is, the preparing the Land for it by Tillage, that kills natural Grass, and most other Weeds; and those that are left are hindered from propagating by Seed, if the Clover be mowed before they are ripe, and by the Rotting of its large Roots, and by such other Benefits as are shewn that a Soil receives from St. Foin, and other *long tap-rooted Plants*.

The Benefit that the Clover and Turnep Husbandry brings to a Soil, consists in the Pulveration it occasions by Tillage as well as by Fermentation.

P. 40. L. 35. *Plowed as deep as the Staple will allow.*] *Equivocus* insinuates to his Readers, that I have advised to plow below the Staple of such thin Land, and bring up the *Spelt*: But every Reader will see the contrary is true.

P. 40. L. 38. *But that they* [the Dews] *are again exhaled in the Day.*] But this ill Effect of the Shallowness may be helped by doubling the Thickness of the Staple by raising it into little Ridges.

P. 41. L. 14. *Destroys those thin poor Fields.*] Against burning such Land *Equivocus* agrees with me: But says, that is not the Land that *Virgil* means. To which I answer, that the Meaning of *Virgil* in this Point is best known by the Followers of his Husbandry, and if his late Commentator be in the Right as to the Southern Parts of *England* being the chief Seat of it, "where *Latin* Words are in Use at this "Time among the Rusticks," which I believe is true, then there can be no doubt of *Virgil*'s Meaning, or that I have perverted it: For 'tis and always hath been the Practice of those *Virgilians* to burn the Surface of their *poor, thin, hollow Downs*, and this is the only Burning I have treated of, nor did I hear that any other Sort was burnt till of late, and believe the Burning the other Sorts, which *Equivocus* mentions, is a new Practice, and no where common.

Equivocus pretends, that *Virgil* doth not mean the Burning of this Light Sort of Soil, because he has just dispatched it before by his *Sat erit, &c.* but this Pretence is without Reason, it being the Practice to sow such sometimes *without* burning, and indeed oftner than *with* it, and *Virgil* seems here to treat of *Burning* the same sort of poor Land, the *Plowing* of which he had just before treated of in the *Sat erit*; for his Words are *sæpe etiam*, oftentimes *also*.

He pretends, that *Virgil* meant those Kinds of Soils, that owe their "Sterility to the too close Contex-"ture of Parts, which will not suffer the Superfluous Water to pass off, or the Roots of Corn or Trees to "penetrate or find their Way into, or pass thro' them, till they are subdued by Fire."

But how Burning should *prevent the too great Plenty of Water from causing Barrenness by standing too near the* SURFACE, I can't imagine: For barren Clays, and that *tenacious* Kind of Land are generally more tenacious below the Staple than at the Surface, which is, I suppose, the only Part to be burnt: And the Fire diminishing that, the next Surface that remains after the Burning will be lower than the former, and thereby retain more Water in and upon the remaining Staple.

There may be, and I'm informed there is, a Sort of *deep* Land covered with coruse Grass, Sedge, and Trompery, which Burning may make a quick Dispatch of, and by reason of its Thickness, enough may be left for many Burnings: But as the upper Part is always the richest, some of which the Fire carries away, and the rest it converts into a Manure, the Staple must be diminished, and by many Repetitions at last be much impoverished, as every Burning makes it thinner, though it may be a long time before such a Soil becomes too thin by frequent Burnings.

Equivocus's Experiment of burnt Earth put into a Pot, and set abroad for a Year, encreasing its Weight a sixth Part, proves nothing, but that wet Earth is heavier than dry Earth. 'Tis such another Experiment as he gives elsewhere of *old* Pieces of *Bricks* being thrown out *by Accident*, and in some Time encreasing in their Weight. How knows he their Weight was augmented, if they were thrown out by Accident without weighing, whilst dry?

Such precarious Experiments are convincing to no Philosopher but *Equivocus*.

P. 41. L. 19. *Contrary to one another, and jarring among themselves, are all of them false.*] The most material Answer which *Equivocus* seems to make to this Charge is, *in p.* xvii. *of his Preface to August*, by allowing the Incoherence of the three last Lines, *viz.*

Seu

Seu durat magis, & venas astringit hiantes;
Ne tenues Pluviæ, rapidive potentia Solis
Acrior, aut Boreæ penetrabile Frigus adurat.

which Lines, he says, "This Noble Poet has in all Probability added by a *Licentia Poetica*, a License that "most of those Poets take, who are to weave their Precepts with their Poetry."

Here *Equivocus* hath indeed for once hit upon the only Way of reconciling Contradictions: But I may presume to say with good Assurance, that this *Licence* is never allowed to a Philosopher; and those four Reasons of *Virgil*, I spake of as *abstracted from the Poetry*.

Equivocus (in *p.* 23. of the same *Preface*) says, that the *Cement* of Stiff Land (*except too much burnt*) *is not all gone*: I have said nothing in my Essay concerning the Cement of burnt Stiff Land; and therefore he equivocates in charging me with *fallaciously affirming* any Thing of it; but by this Exception he, I think, doth not deny that the Fire carries away the Cement in Proportion to the Degree of Burning.

And 'tis ridiculous to say, that that Part of the Earth which is not burnt, which I suppose is much the greatest Part, (only the Turf or Surface, and not much of the Staple passing the Fire,) is either made opener or looser, braced or relaxed by the Burning of the Turf or Surface, which is but a small Part of the Staple, except by what the Ashes of the burnt Part effect by being spread thereon as a Manure.

P. 41. L. 36. *Novas veniat qua succus in Herbas.*] I do not well understand what Authors mean by the Juices of the Earth: They seem to mean something beside Water, when they add the Epithets, Sweet and Sour.

When Earth and Water have been altered by the Operations they suffer in the Vessels of Plants, they are converted into Juices: But no Juice properly so called, can be made by *inorganical* Matter: Therefore it seems a very improper Word to express the Moisture of the Earth, in writing of Husbandry, though very elegant in the Poet.

P. 42. L. 34. *Multum adeo, Rastris glebas qui frangit, &c.*

Equivocus accuses me for disliking Harrowing and Hurdling *generally*, when I only blame the Method used by our worst *Virgilians* of Scratching the Superficies of the Land, instead of tilling the Staple of it, which, if it were well tilled, there would be no Clods to occasion the Trouble, and (if the Land be moist) the Damage of Harrowing. But, I believe, no body ever denied, as he would insinuate, that Harrowing or Hurdling is necessary for covering of sown Corn or Grass-Seeds, except such Corn as is sown under Furrow.

P. 43. L. 5. *Third Plowing.*] And sometimes the fourth: For it should not be cross-plowed before the Grass (or Turf) is totally dead.

In *Common* Fields the Lands are generally so narrow, that they cannot be cross-plow'd: neither is it ever necessary, where Land is clean plow'd without *(Scamna)* Balks.

Equivocus says, "that if *Virgil* should be wrong, 'tis certainly no great Fault in a Poet, since Authors in "Prose are sometimes guilty of worse."

I do not say, 'tis a great Fault in *Virgil* to be wrong either as a Poet or a Husbandman; I only think I prove, that he is wrong in the latter Capacity: And I have not so much Veneration for the Authority of the Prince of Poets, as to think that *right*, which my Reason and Experience convince me is *wrong*: and I cannot help thinking the late Commentator much in the right, when blaming Mr. *Dryden*'s Version, he says, that if you take from *Virgil* his Figures, you take the Club from *Hercules*; neither can I dissent from *Seneca* in my Opinion of the *Georgics*, because he living nearer to *Virgil*'s Time, could better judge of the Truth of them than *Equivocus*. Take *Seneca*'s Words in his 86th *Epistle*, *Englished* by Mr. *Cowley* in the Notes on his *Davideis*, as follows, *viz.* "*Virgil did not look upon what might be spoken most* TRULY, *but* "*what most* GRACEFULLY; *and aimed more at Delighting his* Readers, *than at Instructing Husbandmen.*"

Hence, I think, that one who writes on the same Subject, with a quite contrary View, (as I have done) his Husbandry, may in that respect be termed without Arrogance *Antivirgilian*.

P. 43. L. 8. *Humida Solstitia - - - Orate, &c.*] Here *Equivocus* makes heavy Clamours against me, for advising to keep Land moist by retaining the Dews: He says, that some Nights let fall no Dews, but such Nights are certainly very rare, and when they happen, there is the more need to preserve those Dews that have fallen in the moist Nights.

He says, that if I had the Power of correcting the Liturgy, I would expunge the *Prayer* for *Rain*: But *Equivocus* no doubt means no other *Liturgy*, than of *Virgil*, to his God *Augustus*. *Vid. Pref.* to *Sept.*

Ignavosque vias - - - - miseratus Agrestis
Ingredere, & votis jam nunc assuescæ vocari.

P. 43. L. 21. *Ipsa dies alios alio dedit ordine Luna, &c.*]

In my Remark on this Fancy of the Moon *Equivocus* accuses me of using "all the opprobrious Language "I'm able to bestow on *Virgil* (and his Commantator) but this is so false, that I defy him to shew any opprobrious Language in my Essay.

'Tis also as false for him to assert, that I say there *is not* "*one useful Truth discovered in the Georgic.*"

The Trick of *Equivocus* is to quote falsely as he doth very frequently, if not generally: He leaves out the Word *New*, which quite Changes the Sense of my Expression.

But although it should have been said, that *Virgil* had been the Discoverer of no Truth in his *Georgic*, the Assertion had not been amiss; because he who writes of no Truth but what he takes from Books writ a thousand Years before him, cannot be a Discoverer of it.

Equivocus excuses *Virgil* concerning the Influence of the Moon, as follows, "an Error (if it may be cal-"led one) of which not only *Virgil*, (who is chiefly celebrated for his Poetry) but also all the antient Hus-"bandmen, who wrote before and after him, were guilty, and was in all Probability inserted by *Virgil*, "in

" in Compliance with the Currency of the Times, rather than out of any *serious Belief* of its Influence " on *Planting* or *Sowing*."

This is a wonderful Vindication of the *Veracity* and *Sincerity* of *Virgil*, for which the *Virgilians* are much obliged to his Champion *Equivocus*, who is such a Zealot of Truth, if you will believe him. But 'tis plain that *Equivocus* pretends to have more Faith in this Error, than he says VIRGIL had, and defends it with his usual Arguments, which require much Patience for a Man of common Sense to read. Also in his Essays some Works are directed to be done in the Increase, and others in the Decrease of the Moon.

Yet in his Essay of *June*, *p.* 99. he says, "But whether the Encrease or Decrease of the Moon affects, it " seems at present to be an antiquated as well as useless Speculation."

P. 44. L. 3. *Nonne vides eroceos, &c.*] 'Twas the six Lines immediately preceding, that occasioned this my Remark; for *cultusque habitusque locorum*, is that fond Maxim that forbids all new Improvements.

Et quid quæque ferat Regio, & quid quæque recusset.

This Verse seems to forbid Improvements by *Exoticks*, and if it had been always observed, we should have had neither Apples even in *Herefordshire*, nor Cherries in *Kent*.

This Rule VIRGIL endeavours to inforce by the Reasons or rather Examples mentioned in the four following Lines, *viz. Nonne vides eroceos, &c.* These Reasons *Equivocus*, though he exclaims against me in a scurrilous Manner for Disapproving, yet after he has pretended to excuse *Virgil* again by a (*Licentia Poetica*) disapproves them more severely than I have done, but in other Words, in *p.* xxx. of the *Preface* to *August*, *viz.* " And what Fool could not have said as much as he has done? For had Virgil been *serious* and wrote " in Prose, he might have been deemed as mad as several People do this Author (*i. e.* Horse-hoer;) but " Poets sure have a little more Liberty to make Use of Flights in Verse than those who write in Prose " have."

Now, I suppose, that every impartial Reader will allow, that *Equivocus* himself has implicitly acquitted me of "*either not having understood* Virgil's *Meaning, or else wilfully misrepresented it.*" For if VIRGIL was neither sincere, nor *serious*, nor believed himself what he wrote, as his Champion *Equivocus* urges in Defence of Virgilian Husbandry, how shall any Body understand his Meaning? Or if no Body but *Equivocus* understands it, how can any other *wilfully* misrepresent it. Or how should I, who am no Critick, be certain of a *Poet's* Meaning, which the Criticks among themselves differ about? Our Critick *Equivocus*, against the Opinion of all others, will have it, that where VIRGIL says, *Hoc imitamur arando*, by *putre solum*, VIRGIL means *Putridum solum*: But 'tis certainly absurd to conclude with *Equivocus*, that the Design of *Tillage* is to imitate *putred, cold, watry* Land. He has also made bold to correct Dr. *Trap's* Translation of *Male pinguis Arenæ*; changing *barren Sands* to *moulder'd Clods*.

VIRGIL says, *putres sulci* is the Soil whereon to sow *Medica*, [Lucerne] and it is well known, that even in hot Countries, that Grass will not succeed on a watry Staple: Therefore his *putre solum* is not *putridum solum*, but rather *molle* or *mite solum*, a loose mellow Soil.

And *Col. Lib.* ii. *cap.* 2. explains what *putre solum* is (speaking of the *African* Lands, he says,) *Atque ejusmodi Terram pinguibus arenis* Putrem *veluti cinerem solutam, &c.*

For my Part, I have taken VIRGIL's Meaning in the true Sense, to the best of my own Judgment. And do not think it worth while to enter into any Dispute about it, unless it were of greater Moment than I apprehend it to be: And so I leave *Equivocus* to expound it by a (*licentia Poetica*) the Latitude of which I'm not Poet enough to determine the Extent of.

But if *Equivocus* thinks the *Licentia Poetica* to be so very extensive, he should have wrote in Verse to intitle himself to the Benefit of the Poets, as Felons are entitled to the Benefit of the Clergy; but then he must have taken Care to *write* like a Poet, as the Felon must *read* like a Clergyman.

In *p.* xxxii. *of the same Preface*, he demands the Reason why I find Fault with one of the best Authors of Antiquity, whose Husbandry has stood the Test of so many Ages? To which he gives himself an Answer as ridiculous as false. And then he goes on to say of me as follows, *viz.* " He might indeed have attacked a " *Bradley*, or even a *Woodward* (as he has done) with pretty good SUCCESS, but a VIRGIL is certainly an " Over-match for him, and 'tis much to be wondered at, that VIRGIL's Translator, who has so just a Value for him, should let this great Adept pass so long unobserved."

'Tis well known, that VIRGIL was bred a *Farrier*, which we call a *Horse-Doctor*, which Trade has generally in most Countries annexed to it, that of a Blacksmith: It doth not indeed appear, that he had both those Trades; but however his Farrier's Trade was sufficient to take up his Time in learning and practising it, until he went to *Rome*, and then he had something else to do than to plow; therefore the only time he was likely to have for plowing, must be before he was arrived at Years proper for learning his Trade, and most of that Time too seems to have been spent in keeping Goats or Sheep, as many of the Boys of our lower Class of People do. However such an Age, wherein even Plow-Boys that do nothing else but Plow, are very incapable of making useful Observations upon arable Husbandry; so that VIRGIL could have little or no Experience in it of his own, and must have taken what he wrote from Books written by those Authors who lived when Agriculture was in its most imperfect State, as *Hesiod*, and the other *Greeks* did.

VIRGIL was *born* a Poet, and undoubtedly the best [of the *Latins*] that ever wrote; but neither he, nor any other, I believe, was ever *born* a Farmer: Talents in Husbandry must be acquired by long Experience and diligent Observations thereon; and he that will make any Improvements therein, must sometimes deviate from the Old beaten Road of *Patrios Cultusque Habitusque Locorum*, by Way of Trial.

By asserting, that VIRGIL's Husbandry has stood the Test of so many Ages (1700 Years) *Equivocus* contradicts the Commentator he praises, who with great Truth affirms, that *There is more of Virgil's Husbandry put in Practice in* England *at this Instant, than in* Italy *itself*: Which is as much as to say, It has not stood the Test, even in VIRGIL's own Country, but is there disus'd; and, I believe, if that Matter were fully enquired into, it would appear, that it never was much practised or approved of about *Rome*, or any other Part of *Italy*.

From the *Agrarian* Laws also, the same may be infer'd; for that small Portion of Land allotted to each Family, in this *Virgilian* Culture, would not have been sufficient to keep those Families from starving.

And

And in my travelling through that Country (and I went the whole Length of it by Land) traversing the Kingdom of *Naples* almost all over, and made a considerable Stay in many Places thereof; and in above two Years time, I never could find or be informed of Paring or Burning, or of *Rastering*, or of Sowing Corn without many Plowings there, and yet their Land is not *strong*.

And, methinks, it looks very odd, that *Equivocus* after he has affirmed that the Husbandry of *England* has been for these 1700 Years *Virgilian*, should in *p.* 11. of his Advertisement to his Vol. II. talk of " *rousing* our " *Countrymen, if possible out of that fatal Lethargy into which they have long fallen.*" What Test is likely to have been made in such a Country, if *Equivocus* speaks Truth? Or if the *Virgilian* Husbandry they had so long practised in their *Lethargy* were right, why doth *Equivocus* endeavour so obstreperously to *rouse* them out of it? But he seems to condem the *English Virgilian* Husbandry yet more in *p.* iv. of his Preface to *July*, when he affirms, that " the greatest Part of the Nation have been all along bewildered in dark uncertain Paths, " not having come into the *True* Notions in Practice and Theory till of *late*."

Note, Rastering is Plowing one Furrow, and leaving another unplowed, which is at most but Half a Plowing.

Thus Burning the Surface, and plowing light Land late, and but once or twice, and sometimes Half-plowing it, make that Scheme of *bad* Husbandry that *Virgil's* Translator justly imputes to him, and whom he would not wrong, having *such a value for him*, and herein he is warranted by the general Practice of the Southern Parts of *England*, where this worst Sort of *Virgilian* Husbandry reigns, being in most other Places exploded, except by those who adhere more to blind Custom than to reason: And must of Necessity be exploded in those Southern Parts also, were it not for their vast Tracts of Downs, which maintain such extraordinary Flocks of Sheep that suffice to help them as I'm informed, to dung their once-plowed Land twice over, which Dung with a great Quantity of Seed harrow'd in among the high Charlock and other Weeds, produces them Crops so uncertain, that 'tis a Rule amongst the Farmers there, that the Profit of Sheep must pay their Rent, and notwithstanding that, I hear of more Farmers that break in that Country than elsewhere. And one Thing I'm sure they will readily grant me, *viz.* That were all their Downs taken away, they must either change their *Virgilian* Husbandry on their arable Land, or desert that *Virgilian* Country; for without Sheep their Land with their Sort of *single* Tillage would not produce Corn either to pay Rent or to maintain them in Food.

This *Virgilian* Husbandry being shewn, its opposite is not to pulverize Land by Fire, nor put trust in Dung and Harrows to supply the Place of the Plow; but, on the contrary, to give to every Sort of Land proper and sufficient Tillage (the poorest requiring most) and to use only what Dung we have, or can reasonably get in the properest Manner, is that Husbandry which I call *Antivirgilian*; of which my *Horse-hoing* Scheme is a *Species*.

When *Equivocus* pretends to prove by Experience that *Virgil's* bad Husbandry is best, he has Recourse only to the Experience of *Virgilians*, which proves no more than that *Virgil's* Husbandry is *Virgilian*; and not that 'tis better than any one Species of the *Antivirgilian*; but in Truth every proper Trial proves it to be Worse.

Poetry, like Musick, is a very pleasant and innocent Amusement of Life; but we ought not to suffer our Diversion to captivate our Reason; and if we seriously consider? The Scope and Design of the *Æneid* and *Georgic*, what Opinion can we have of *Virgil's* Regards for Truth, or if it be true, as *Ruæus* relates, that *Virgil's* Advice and Persuasions intailed perpetual Slavery upon the bravest People in the World, we cannot but know what a Patriot he was, and how his Principles ought to be esteemed by all the Lovers of Liberty. And I don't think it any more injurious to *Virgil's* Memory to say, that he was the best Poet, and the worst Field Husbandman, than it is to *Tully's* to say, that he was the best Orator, and the worst Poet.

P. 46. L. 1. *More easily seen.*] Drill'd Turneps coming all up nearly in a *Mathematical Line*, 'tis very rarely that a Charlock or other like Weed comes up in the same Line amongst them, unless it be drilled in with the Turnep-Seed, of which Weeds our Horse-ho'd Seed never has any; there being no Charlock in the Rows, nor any Turnep in the Intervals; we know that whatever comes up in the Interval, is not a Turnep, though so like it, that at first coming up, if promiscuously, it cannot easily be distinguished by the Eye, until after the Turneps, &c. attain the Rough Leaf, and even then before they are of a considerable Bigness, they are so hard to be distinguished by those People, who are not well experienced, that a Company of *Hand-hoers* cut out the Turneps by Mistake, and left the Charlock for a Crop of a large Field of sown Turneps. Such a Misfortune can never happen to drilled Turneps unless wilfully done, be they set out ever so young.

P. 46. L. 3. *The sooner they are so set out, the better they will thrive.* Because such young Turneps will enjoy the more of the Pasture made by the Plowing, and by that little Pulveration of the Hand-hoe, without being robbed of any Pasture by their own Supernumerary Plants.

P. 46. L. 17. *Between Rows of Turnips.*] As I have formerly drilled Wheat between Rows of Turneps; so I have since had the Experience of Drilling Turneps between Rows of Barley and Rows of Oats, as mentioned in my *Preface*, *p.* viii. I have had them in the Intervals between Six-foot Ridges, and between Four-foot Ridges, and between those of several intermediate Distances; but which of them all is the best, I leave at present undetermined. I shall only add, that the poorer the Land is, the wider the Intervals ought to be; and that in the narrow 'tis convenient at the Hoing to leave more Earth on that Side of each Interval, whereon the Turneps are to be drilled; and this is done by going round several Intervals with the Hoe-Plow, without going forwards and backwards in each immediately: But in the wide Intervals the Earth may be equal on both Sides of them.

I will propose another Method of Drilling, which may be very Advantageous to those who sow their Barley upon the Level, and sow Turnep-Seed amongst it at Random as they do Clover, which is of late a common Practice in some Places: The Barley keeps the Turneps under it, and stunts them so much, that they are useful in the Winter or Spring chiefly by the Food their *Leaves* afford to Sheep, their Roots being exceeding small; and for this small Profit they lose the Time of Tilling the Ground until after the Turneps are eaten off, which is a Damage the *Antivirgilians* think greater than the Profit of such Turneps: To prevent which Damage they may drill them in Rows at competent Distances, and Horse-hoe them, and set them out as soon as the Barley is off: This will both keep the Ground in Tilth fit for another Crop of Spring-Corn, and cause the Turneps to grow great enough (especially if Harvest be early and the Winter prove favourable) for Feeding of Sheep in a moveable Fold to dung the Ground into the Bargain.

What

What induces me to propose this Improvement is, that a Gentleman plows up his Barley Stubble and transplants Turneps therein, and Hand-hoes them with Success. By the proposed Way all the Expence of transplanting (which must be considerable) will be saved; and the setting out cannot be more than an Eighth of the Labour of *Hand-hoings*; and I conjecture the Horse-hoed Turneps may be as good; for they though stunted) having their Tap-roots remaining unmoved below the Staple of the Land, their Horizontal Roots being supply'd with Moisture from the Tap-roots, immediately take hold of the fresh plowed Earth, as soon as 'tis turned back to them: Whereas the Transplanted having their Tap-roots broken off, and their Horizontal Roots crumpled in the Holes wherein they are set, must lose Time, and be in Danger of Dying with Thirst, if the Weather prove dry.

Also this Way seems better than the common Practice of sowing Turneps upon once-plowing after Wheat; because the Wheat-Land commonly lies longer unplowed by six or eight Months than Barley-Land; and therefore cannot be in so good Tilth for Turneps as Barley Land may, unless the former be of a more friable Nature, or much more dunged than the latter. Besides these Wheat-Turneps are uncertain, in respect of the Fly that often destroys them at their first coming up, which Misfortune happened the Autumn 1734. to almost all that were sown in that Manner.

I have observed that Barley sown on the Level, and not hoed, overcomes the Turneps that come up amongst it; but that Turneps which come up in the Partitions of Treble Rows of my Ridges of Horse-hoed Barley, grew so vigorously, as to overcome the Barley. And this was demonstrated at Harvest in a long Field, one Side of which had born Turnep-Seed, and the drilled Ridges of Barley crossing the Middle of it, and both Ends of the Field having Barley sown on the Level, one End of every Ridge cross'd the Turnep-Seed Part of the Field for about ten Perch of their Length.

I observed, also that the Turneps near the Edges of the Lands of sown Barley, adjoining to the hoed Intervals, grew large, but not so large as those in the Partitions on the Ridges, their Intervals being hoed on each Side of them.

But different from this have I seen shattered Turnep Seed coming up in the like Partitions of Drilled Wheat, on the very same sort of Land, so miserably poor and stunted, that they scarce grew a Hand's Breadth high, when those Turneps which the Hoe left in the Sides of the Intervals, and at the narrow Edges of the unhoed Earth of the Interval Sides of the Rows of Wheat, grew large; and the Wheat was good also: But I do not remember how the Middle Row of it succeeded.

This last Experience of the Turneps among the Wheat was got by this Accident: The Wheat was drilled after drilled Turneps on Ridges of a different Size. The Turneps were all pulled up before the Ground was plowed for the Wheat: But as Turnep Seed never comes *all* up the first Year, enough remained of this to come up (though thinly) in the Wheat, to shew exactly where every Row had been drilled; whereupon the Observation was made.

P. 46. L. 40. *By this Means the Turneps are kept from being stunted.*] Because this alternate Hoing doth not at all endanger the Roots, by being dried by the Sun; for whilst one Half of the Roots have Moisture, 'tis sufficient, the other Half will be supplied from those, so that they will soon take hold of the Earth again after being moved by the Hoe.

P. 47. L. 2. *A Prong-Hoe.*] Some of these Prong-Hoes have three Teeth, and are reckoned better as a *Tridens* than a *Bidens*; but this is only in mellow Ground.

P. 47. L. 24. *Horse-hoing, which always can keep the Roots moist.*] But if some Sorts of Earth have laid so long unmoved as to become very hard before the first Hoing, the Hoe going very near to the Rows on each Side, may cause such hard Earth whereon the Rows stand, to crack and open enough to let in the Drought (*i. e.* the Sun and Air) to the Roots in very dry Weather. In this Case 'tis best to *Horse-hoe* alternately, as is directed in the *preceding Page*.

P. 50. L. 3. *Grown so stale.*] Stale is the Term for Ground that has lain for some considerable Time unplowed and unmoved, and is also used, as well as in this Case, for Ground that lies a Time after Plowing before it is sown; and is contrary to that which is sown or planted immediately after Plowing.

P. 50. L. 5. *Upon fresh Plowing.*] The Word *Fresh*, when joined with Plowing is a Term opposite to *stale*, which is explained in the preceding Note, though it be there joined with the Word Ground.

It has also sometimes another Signification when joined with the Word *Ground*; as *fresh* Ground, is that which is plowed up after not having been used as *arable* for several Years. But such Land as hath not been *arable* for a great Number of Years is more commonly called *new-broke* Ground.

P. 50. L. 23. *Equal to that of Dung.*] Because the Hoe may go in it all the Year, and the Soil being *infinitely Divisible*; The Division which the Hoe may make whilst the Crop is growing, added to the common Tillage may equal or even exceed a common Dressing with Dung, as I have often experienced.

P. 51. L. 25. *About eighteen Inches broad.*] This is the Breadth the Ridges are generally left at, when the Furrows are hoed from them, and thrown into the Intervals.

P. 52. L. 18. *Make a Ridge over the Place, where the Trench was.*] 'Tis the Depth and Fineness of this Ridge, that the Success of our Crop depends on; the Plants having nothing else to maintain them during the first six Months; and if for want of Sustenance, they are weak in the Spring, 'twill be more difficult to make them recover their Strength afterwards so fully as to bring them to their due Perfection. But Plowmen have found a Trick to disappoint us in this fundamental Part of our Husbandry, if they are not narrowly watched; they do it in the following Manner, viz. They contrive to leave the Trench very *shallow*, and then in *turning* the two first Furrows of the Ridge, they hold the Plow to wards the Left, which raises up the Fin of the Share, and leaves so much of the Earth whereon the Rows are to stand *whole*, and unplowed, that after once Harrowing there doth not remain above two or three Inches in Depth of *fine* Earth underneath the Rows when drilled, instead of ten or twelve Inches.

On a Time, when my Diseases permitted me to go into the Wheat-Field, where my Plows were at work, I discovered this Trick, and ventured to ask my chief Plowman (or rather chief Master) his Reason for doing this in my Absence, contrary to my Directions? He magisterially answer'd, according to his own (and *Equivocus's*) Theory, which Servants Judge ought to be followed before that of him they call Master, saying, That as the Roots of Wheat never reached more than two or three Inches *deep*, there was no need that the fine Mould should be any *deeper*. But those *shallow* Ridges, which were indeed too many, producing a Crop very much inferiour to the contiguous *deep* Ridges, shewed, at my Cost, the Mistake of my cunning Plowman.

'Tis

'Tis true, that People who examine Wheat Roots when dead, are apt to fall into this Mistake; for then they are shrivell'd up, and so rotten, that they break off very near to the Stalk in pulling up; but if they are examined in their Vigour at Summer with Care, in a friable Soil they may be seen to descend as *deep* as the fine pulveriz'd Mould reacheth, though that should be a Foot in Thickness.

I took up a Wheat-Ear in Harvest that had lain on the Grass in wet Weather, where the Wind could not come to dry it, which had sent out white Roots like the Teeth of a Comb, some of them three Inches long, none having reached the Grouud, they could not be nourished from any thing but the Grains, which remained fast to the Ear, and had not as yet sent out any Blade. 'Tis unreasonable to imagine, that such a Single Root as one of these, when in the Earth, from whence it must maintain a pretty large Plant all or most Part of the Winter, should descend no farther than when it was itself maintained from the Flour of the Grain only.

P. 52. L. 46. *Harrow them once.*] But if once be not sufficient to level the Tops of the Ridges fit for the Drill to pass thereon, as it always will, unless the two last *hard* Furrows lie so high, that all the three Shares of the Drill cannot reach to make their Channels, and in this Case you must harrow again until they can all reach deep enough. Also in some Sort of Land, that when drilled late, and very moist, will stick to the Shares like Pitch or Bird-lime, whereby the Channels are in Part left open by the Drill-Harrow, it must be harrowed after 'tis drilled, because 'tis necessary in such Land to take off the Common Drill-Harrow in order for a Man to follow the Drill with a Paddle, or else a forked Stick, with which he frees the Sheats of the adhering Dirt; this Harrow being gone, much of the Seed will lie uncovred, and then must be covered with Common Harrows, unless a *Drill-Harrow*, which was not in Use when my Plates were made, be placed instead of that taken off: This with its two Iron *Tines* will cover the Seed in this Case much better than common Harrows, and will be no Hindrance to cleansing of the Sheats, the Legs by which this Harrow is drawn being remote from them, placed at near the End of the Plank; and *note*, that the most proper Drill for this Purpose is one that has only two Shares standing a Foot or fourteen Inches asunder: This Harrow serves for taking up the Drill to turn it.

P. 54. L. 5. *Once will be enough.*] Once Harrowing is generally enough but not always.

P. 54. L. 19. *Smyrna Wheat.*] 'Tis said to grow mostly in some Islands of the *Archipelago*, and some Author describes it *Triticum spica multiplici*; there is another Sort of Wheat that has many little Ears coming out of two Sides of the main Ear; but this is very late ripe, and doth not succeed well here, nor is it liked by them, who have sown it; yet I have had some Ears of it by Chance among my drill'd Wheat, which have been larger than those of any common Sort. I have not as yet been able to procure any of the *Smyrna Wheat*, which I look on as a great Misfortune; but I had some of it above forty Years ago.

P. 55. L. 4. *Becomes as large a Plant as the largest Grain can produce.*] Farmers in general know this, and chuse the thinnest smallest grained Wheat for Seed; and therefore prefer that which is blighted and lodged, and that which grows on new-broke Ground, and is not fit for Bread, not only because this thin Wheat has more Grains in a Bushel; but also because such Seed is least liable to produce a *smutty* Crop, and yet brings Grains as large as any.

I myself have had as full Proofs of this, as can possibly be made in both Respects.

'Twas from such small Seed that my drill'd *Lammas* Wheat produced the Ears of that monstrous Length described in this Chapter, I never saw the like, except in that one Year; and the Grains were large also.

And as full Proofs have I seen of thin Seed Wheat escaping the *Smut*, when plump large grained Seed of the same Sort have been *smutty*.

Equivocus is the only Denyer (I have heard of) that a small Grain of Wheat will produce as large Grains as any.

P. 56. L. 9. *The Middle Row.*] The Reasons of adding the middle Row were, *first*, as an Alloy to the Exuberance of the other two, when they were of the *Lammas* Sort. *Secondly*, when I found it necessary for constant annual Crops of Wheat, to enlarge the Intervals, and lessen the Number of Ridges, I thought proper to encrease the Number of Rows on each Ridge.

Thirdly, That when Part of a Row was trodden out by Hunters, or torn out by any other Accident, there might remain two Rows entire; for when such Accidents should happen to a double Row, one only remaining in such Places might be too little between wide Intervals.

But the only Reason for the Middle Row, which latest Experience shews to be valid, is for the Alloy it makes to the too great Luxuriousness of the other two Rows; for now the Plowmen know how to hoe well, they never plow out any Part of an outside Row; and though we can by raising the Ridges higher, make the three Rows pretty equal, yet this is not a Proof, that the three produce more than the two would do without the Middle Row, because that being left out, the one Partition may be more deeply pulverized by the Hand-hoe, and the Weeds more easily taken out; and the two Rows must have much more Nourishment than when there is a middle Row.

I have lately seen such Demonstrations of the Difference, that I purpose for the future to drill *White Cone* Wheat (which is the only Sort I now plant) in double Rows only, with a Partition of a Foot or fourteen Inches.

P. 56. L. 29. *Like the Radii of a Circle.*] This is from their Sides; but Roots go from a Corn-Plant in a Hemisphere like the Rays of a Star.

P. 56. L. 36. *Could have but half the Nourishment, &c.*] Because each Row had Nourishment from one Side only, instead of two Sides, which they would have had, if the Partitions had been competent.

P. 58. L. 21. *And admit the Roots of the Middle Row to pass through, &c.*] If the middle Row did not receive Benefit by its Roots from one or both of the Intervals, then a Middle Row that had Partitions of eight or nine Inches on a high Ridge would exceed one that had Partitions of seven Inches, the former having more room on each Side of it: But 'tis just the contrary; for the latter exceeds the former, which it could not do, but from the Nourishment it receives from the Intervals.

P. 58. L. 50. *The Furrow.*] The Word Furrow signifies the Earth that is thrown out, as well as the Trench from whence it is thrown by the Plow.

P. 59. L. 2. *Before or in the Beginning of Winter.*] But if the Wheat is planted very late, it may not be *hoable* before the Winter is past; nor is there such a Necessity of hoing the late-planted before the great

Frosts

Frosts are over, as there is of the early planted; for the later 'tis planted the less Time the Earth has to subside and grow hard.

Note, By Winter we do not mean only those Months that are properly so reckoned, but also such other Months which have hard Frosts in them, as *January*, *February*, and sometimes the Beginning of *March*.

P. 61. L. 5. *Very large or very small, in Proportion to the Nourishment given them.*] Like as the Vines, if well nourished, bring large Bunches of Grapes; But if ill nourished, they produce few Bunches, and those small ones, and many Clasper are formed, which would have been Bunches, if they had had sufficient Nourishment given them at the proper Time.

P. 61. L. 14. *Makes a greater Crop from a Tenth Part of the Plants, &c.*] The Fact of this nobody can doubt of, who has observed the different Products of strong and of weak Plants, how the one exceeds the other.

Equivocus in his Advertisement to *April*, quotes Authors, who affirm, that a single Grain of *Smyrna* Wheat produced 9792 Grains; one Grain of Barley 18,000, and one dean 1050 Beans; but 'tis reckoned a very great Increase, when our *sown* Fields produce a ten-fold Crop, that is, ten Grains for one that is sown; which is 9782 less than the Increase of Wheat by that Author related.

The greatest Difference of having an equal Crop from a small Number of strong Plants, and from a great Number of weak ones, is, that the Soil is vastly less exhausted by the former than by the latter, not only from the latter's Exhausting more in proportion to their Number when young, and whilst each of them consumes as much Nourishment, as each of the small Number; but also from the different Increase that a strong Plant makes by receiving the same Proportion of Food with a weak one: For it appears from Dr. *Woodward's* Experiments, that the Plant which receives the *least* Encrease carries off the *greatest* Quantity of Nourishment in Proportion to that Encrease; and that 'tis the same with an Animal, all who are acquainted with Fatting of Swine know; for they eat much more Food daily for the first two Weeks of their being put into the Stye than they do afterwards when they thrive faster; the fatter they grow, the less they eat.

Hence, I think, it may be inferred, that a Plant, which by never having been robbed or stunted by other Plants, is strong, receives a much greater Increase from an equal Quantity of Food, than a Number of weak Plants (as thick ones are) equalling the Bulk of the single strong Plant do.

And this of the Doctor's have I seen by my own Observations confirmed in the Field, in Potatoes, Turneps, Wheat, and Barley; a following Crop succeeds better after an equal Crop consisting of a bare competent Number of strong Plants, than after a Crop of thick weak ones, *cæteris paribus*.

Thus the hoed Crops, if well managed, consisting of fewer and stronger Plants than the sown Crops of equal Produce, exhaust the Ground less, whereby, and by the much (I had almost said infinitely) greater Pulveration of the Soil, indifferent good Land may, for any thing I have yet seen to the contrary, produce profitable Crops always without Manure, or Change of *Species*; if the Soil be proper for it in respect of Heat and Moisture; and also as Crops of some *Species* by their living longer, by their greater Bulk or different Constitution, exhaust more than others, Respect ought to be had to the Degree of Richness of the Soil, that is to produce each *Species*.

The Sowing and the Hoing Husbandry differ so much both in Pulveration and Exhaustion, that no good Argument can be drawn from the former against the latter, especially by *Equivocus*, whose Works demonstrate him to be more ignorant of both, than any Author that (I believe) ever wrote of Husbandry before him, and 'tis to be hoped, that ever will after him; the Design of *Equivocus* in Writing, being only to defame not to instruct.

P. 62. L. 3. *Lost because the Wheat Roots do not reach it.*] They do reach through all the Mould (as shall be proved by and by) and yet may leave sufficient Pasture behind; because 'tis impossible for them to come into Contact with all the Mould in one Year, no more than when ten Horses are put into a Hundred Acres of good Pasture, their Mouths come into Contact with all the Grass to eat it in one Summer, though they will go all over it, as the Vine Roots go all over the Soil of a Vine-yard without exhausting it all; because those Roots feed only such a bare competent Quantity of Plants, which do not overstock their Pasture.

The Superficies of the fibrous Roots of a proper Number of Wheat Plants, bear a very small Proportion to the Superficies of the fine Parts of the pulveriz'd Earth, they feed on in these Intervals; for one cubical Foot of this Earth may, as is shewn in *p.* 17. have many a thousand Foot of internal Superficies: But this is in Proportion to the Degree of its Pulveration; and that Degree may be such as is sufficient to maintain a competent Number of Wheat Plants without over-exhausting the vegetable Pasture, but not sufficient to maintain those, and a great Stock of Weeds besides, without over-exhausting it. And this was plainly seen in a Field of Wheat drilled on *six-foot* Ridges, when the South Ends of some of the Ridges, and the North Ends of others, had their Partitions Hand-hoed and cleansed of Weeds early in the Spring, the opposite Ends remaining full of a small *Species* of Weeds called *Crow-needles*, which so exhausted the whole Intervals of the weedy Part of the Ridges, that the next Year the whole Field being drilled again with Wheat exactly in the Middle of the last Intervals, the following Crop very plainly distinguished how far each Ridge had its Partitions made clean of those small Weeds in the Spring, from the other End, where the Weeds remained till full grown: The Crop of the former was twice as good as that of the latter, even where both were cleansed of Weeds the next *Spring*. This Crop standing only upon that Part of the Mould which was farthest from the Rows of the precedent Crop, proves that the Roots, both of the Wheat and Weeds, did enter all the Earth of the former Intervals.

It was also observable, that where the Partitions of two of the six-foot Ridges had been in the precedent Year, cleansed of Weeds, and those of the adjoining Ridges on each Side of them not cleansed, the Row that was the next Year planted exactly in the Middle of the Interval between those two Ridges, was perceivably better than either of the two Rows planted in the Intervals on the other Side of each of them: The reason of which Difference must be, That the Middle of the Interval that was between the two cleansed Ridges was fed on by the Wheat only, and by no Weeds; but the other two Intervals were fed on by the Wheat on one Side, and by both the Wheat and Weeds on the other Side of each.

There were in the same Field several Ridges together that had the Ends of their Rows of Wheat plowed out by the Hoe-plow, and their other Ends cleansed of Weeds: This was done on purpose to see what Effect a Fallow would have on the next Crop, which was indeed extraordinary; for these fallowed Ends of the Ridges

Ridges being Horse-ho'd in the Summer, as the other Ends were, and the Intervals of them made into Ridges, the following Year produced the largest Crop of all; this Crop was received in 1734.

These several different Managements performed in this Field, shewed by the different Success of the Crops in each Sort, what ought to be done, and which is the best Sort of Management.

This Field indeed is some of my best Land; and by all the Experiments I have seen on it, I do not find but that by the best Management never omitted in any Year, it might produce good annual Crops of Wheat always, without Assistance of Dung or Fallow: But it would be very difficult for me to get Hands to do this to the greatest Perfection, unless I were able constantly to attend them.

But now it being thus proved, that the Mould of my widest Intervals, that lies the farthest off from the Partitions, is exhausted by the Roots of the small Weeds that grow in the Partitions, and also by the Roots of the Wheat of the Rows: What can be the Sence of *Equivocus*, when he affirms in *p.* xxvii. xxviii. of his *Essay for July*, *That at the Distance I put my Rows of Wheat, I may drill over a Field for five or six Years running, without ever putting it in one and the same Place.* But this gross Error proceeds from his Ignorance of the Nature of Roots, and of the Proportion they bear to the other Parts of their respective Plants, imagining with my Plow-Man that the Roots of Wheat extend not above two or three Inches from the Stalks; though the above Experiment proves, that the Roots both of the Wheat and Weeds had exhausted that Part of the Mould of the Six-foot-Ridges that was the farthest off from the Rows, else the Wheat that was drill'd where only Wheat grew on each Side of the precedent Year's Intervals, would have been no better a Crop than that where grew Wheat and Weeds too; neither would that Wheat whose Mould whereon it stood had neither Wheat nor Weeds on either Side of it the precedent Year, have been the strongest of all. These Intervals were four Foot ten Inches wide, the two Partitions of the treble Rows being seven Inches wide each.

The whole pulverized Earth of the Interval being pretty equally fed on by the former Crop, 'tis no great Matter in what Part of it the following Crop is drill'd: I never drill it, but on the Middle of the last Year's Interval, because there is the Trench whereon the next Year's Ridge is made with the greatest Conveniency: But there may be some Reason to suspect that the Plants of the Rows exhaust more Nourishment from that Earth of the Intervals which is farthest from their Bodies, than from that which is nearest to them, since their fibrous Roots, at the greatest Distance from the Rows are most numerous, *&c.* by these the Plants when at their greatest Bulk are chiefly maintained.

It must be *noted*, that the above Experiments would not have been a full Proof, if Weeds had been suffered to grow in the Partitions of the more exhausted Ends of those Ridges, in the Year wherein the Difference appeared.

It may also be *noted*, that a Mixture and Variety of bad Husbandry, are useful for a Discovery of the *Theory* and *Practice* of good Husbandry; but it is a great Misfortune that our Servants are apt to shew us the Experiments of the Bad, in greater Quantities than is for our Profit; for since their Authority over us is become absolute, their Will is our Law; and though they let us see that they can do One as well as the Other when they please, we must be content with that Quantity of each, which they think proper to do for us; unless we can manage our Agriculture with our own proper Hands, and with the Product of our Land and Labour maintain that Class of People in Idleness and Luxury.

But for *Equivocus* to pretend to write a *general System* of *Agriculture* without any competent Knowledge of Roots (of which he shews himself perfectly ignorant) is as presumptuous, as if he should pretend to be a great *Mathematician* and *Surveyor* without understanding the four first Rules in Arithmetick.

P. 64. L. 34. *Weighing a Yard, or a Perch in Length of a Row.*] I did not weigh this Yard as different from the other Yards round about it, for I had much difficulty to determine which Row I should chuse it in; when I was going to cut it in one Row, it still seemed that another was better, and I Question whether I didchuse the best at last.

Note, Whereas I often mention the Wheat of this Field to be without Dung or Fallow, it must be understood of that Part of the Field wherein my *Weighings* and other Trials were made; because there was a small Part once fallowed eight or nine Years ago; and a little Dung laid on another Part about the last Michaelmas, after the Crop of Oats was taken off. But this being a Year in which Dung is observed to have little or no Effect on *sown* Wheat, (my Dung being weak and laid thin) 'tis the same here, for those Rows which are in the dunged Part can hardly be distinguished from the rest of the Rows which had not been dunged: And yet the Ends of the Rows which were cleansed of Weeds are very distinguishable by the Colour of the Wheat, though some are the third, and some the fourth Crop since the Difference was made; and the *whole* Rows managed alike every Year from that Time to this; so that *here* Unexhaustion is more effectual than Dung. This is certain that neither Dung nor Fallow hath been near the Part wherein my Experiments were made.

P. 65. L. 22. *Well managed, &c.*] That which is *ill* done, I reckon as *not* done; want of Skill and want of Will are much the same thing. My *Agriculture* having been carried on by common Day Labourers without any Body to inspect them (except when my Diseases suffered me to attend them, which for several Years last past have been very seldom) cannot be expected to be all well managed; for though they can do it well when they please, yet their Will being above controul, I must be content with their doing *some tollerably well* every Year.

But perhaps it may be asked why I do not carry on my *new* Husbandry by House-Servants? This indeed might be a proper Question in other Countries, but is not here; for Husbandry-Servants of all Sorts have now attained to such a thorough Knowledge of their own arbitrary Power given them over their Masters by our *Statutes*, (which are new Laws) and the Judgments thereupon; that I would not keep Plowmen in my House, tho' it were to get a new Farm yearly, especially since the famous Judgment given publickly by some Country Magistrates, that encourages the most disorderly Servants against Fear of Punishment, for the most enormous Crimes they can comit against their Masters (those strictly *Capital* only excepted, which are triable before the King's Judges, and a Jury.) 'Tis not proper for me to report this Case, in regard to the Respect I bear o all Magistrates, and to those four (which were the Number) in particular: Nor will I believe there was either Party or Prejudice in it, whatever may have been by many of the Hearers of that Trial insinuated.

For my own Part I always chose to suffer under my Labourers (and House-Servants too when I formerly kept them) rather than to suffer more by complaining, as I apprehended my Neighbours generally did; and therefore no Magistrate ever had any Trouble upon my Account.

Besides, my Diseases now prevent my complaining, though I should have Hopes of Redress, and will not permit me to travel so far as to the nearest Magistrate; and he who sends one Servant to complain of another, is likely to make but little of his Cause: Or what adequate Satisfaction can be had for the greatest Damage done to the Master by a Servant, who takes Care by spending all his exhorbitant Wages (as most of them do) not to be worth a Farthing?

There are also other Objections, peculiar to my Case, against House-Servants: One is, that they have made it a Custom to leave their Service when ever they please, which is commonly at Spring of the Year, when they are by Farmers reckoned not to have earned more than their Diet; for then they must have half a Year's Wages from Michaelmas, and afterwards they can in another Service, have almost a whole Year's Wages for the remaining Summer half-Year; if you will not consent to let them go, and comply with such Terms, they will make them much worse by Spoiling or killing your Cattle, or by other private Devices, in which they are better skill'd than in their proper Business.

But this is only a Misfortune common to all *English* Agriculture; but what is peculiar to my Scheme, *is*, that when Servants go away, I must be continually teaching new Ones, when I can find them, both which my Confinement and want of Health make difficult.

This Objection is not quite so strong against Day-Labourers, because they are paid by the Week, and being settled married Men, have not so much Choice of Services as the Single unsettled have.

Upon these Accounts the Day-Men do not impose so hard Terms as the other: When I have taught them my Scheme, they will continue to Work for me as long as my Service is more beneficial to them than any other they can get; and as long as I will forbear to find much fault with what they do, or at least forbear to speak to them of their Faults otherwise than in a very humble persuasive Manner; with these Terms I would gladly comply, if it were only to purchase that Peace and Quiet, which are necessary to my Infirmities and incompatible with keeping Plowmen in my House.

This precarious Condition we are in, as to Hands, under the present Regulation, is very discouraging to every new Scheme that requires Labour. But the Thing that is most detrimental to *perpetual* Crops of Wheat, is the Deceit and Idleness of the Weeders, that are necessary to cleanse the Partitions and Rows from Weeds, by *Hoes*, or Hands, or both, especially after they have been a Year or two neglected, their shattered Seed in that Case overstocking the Ground. These Weeders are the same Sort of People that *Mr. Duck* describes as *Hay-makers*, their Tongues are much nimbler than their Hands; and unless the Owner, or some Person who faithfully represents him, (and is hard to be found) works constantly amongst them, they'll get their Heads together half a Dozen in a Cluster, regarding their *Prattle* more than the Weeds; great Part of their Time they spend in Play, except a few of them who bring their own Work with them, some their sewing, some their knitting, and these must be paid for doing their own Work upon my Land: This Wrong I have seen done both to myself and my Neighbours; and it has put me upon endeavouring to find a Way of disappointing the Weeders, *viz.* By planting Wheat sometimes upon a Fallow without Dung, for *one* Crop only; and this is done in the following Manner: After a Crop of Barley sown upon the Level (or *broad Cast*) had immediately succeeded several successive *Horse-hoed* Crops of Wheat, this Barley-Stuble was fallow'd in the *Spring*, till'd in the Summer, and after *St. Michael* plow'd up into Ridges of different Sizes, none under four Foot, nor any above five Foot; then *drilled* with *white Cone* Wheat, in *treble* Rows by my usual *Wheat-Drill*, having its *Marking-Wheels* set nearer together according to the different Sizes of the Ridges. The Partitions not being infested with Weeds, no Weeders were employ'd thereon; but the Intervals were Horse-hoed. The Crop of Wheat was good, it appeared like a fown Crop in Thickness at Top before it was reaped, except that the Ears were very much larger, and there were few under Ears. It was indeed on some of my best Land, but has had no Dung or Manure since the Year 1720, and this Crop was in the Year 1734.

By this Means the Weeders being convinced that it was possible for me to make a Shift to go on with my Hoing Scheme without employing them, they are brought now to better Terms, *viz.* To hoe the two Partitions of the treble Row, and also all the Earth that is left by the Hoe-plow on each Side of the Row, and to cleanse all the Row from Weeds; for all this Work they agree for the Price of a Penny a Score, *i. e.* twenty Perch in length of a Row, which in the Six-Foot Ridges amounts to one Shilling and ten Pence *per* Acre. At this Price they earn almost double the common Wages; and yet if they work by the Day, it will cost me double of this Price to have it worse done; so great a Difference there is between their working for me and working for themselves. The Weeders generally are Women and Boys, and even these sometimes earn Men's Wages, so that I have Plenty of them and Choice; for they make an Interest to be employed. 'Tis only necessary for me to take Care that they do their Work well, and to oblige them in the Bargain to amend what they do amiss; and for that End, the Rows that each Person, or Company undertake are separately known. I give them the same Price for Oats and Barley as for Wheat, and the same for double Rows as for treble; because as the former are less troublesome they hoe them the deeper.

They use for this Work Hoes of four Inches Breadth, very thin and well steeled; their Thinness keeps them from wearing to a thick Edge, and prevents the Necessity of often Grinding them: Such Hoes are in use with some Gardeners near *London*. They need not be afraid of drawing these little Hoes across the Rows of young Wheat to take out the few Weeds that come therein at the early Hoing; for whilst the Wheat-Plants are small it may be an Advantage to cut out some of the Weakest, as they do of Turneps; for I perceive there are oftener too many Plants than too few. But the Thing that causes the greatest Trouble in cleansing the Rows, is when the Seed is foul, (*i. e.* full of Seeds of Weeds) therefore I cleanse my Seed-Wheat by *drawing* it on a Cloth on a Table, which makes it perfectly clean.

This Hand-hoing should be performed about the End of *March* or Beginning of *April*, before the Wheat is *spindled* (*i. e.* run up to Stalks) and if the Weather be dry enough, you may go lengthways of the Ridges with a very light Roller to break the Clods of the Partitions, whereby the Hoe will work the better.

If there should afterwards more Weeds come up, they must not be suffered to ripen; and then the Soil will be every Year freer from Weeds.

This Hand-hoing of the Rows should be done at the proper Time, though it happen, by late Planting, that the Horse-Hoe has not gone before it; for it may be, that the Weather has kept out the Horse-Hoe; and the Earth may not be dry, deep enough in the Intervals for the Hoe-Plow, but deep enough in the Partitions for the Hand-Hoe.

And

And the Expence of this Hand-work on the Rows would be well answered, though there should not be one Weed in them; and so would it be, if a second Hand-hoing were bestowed on the Partitions of every Crop of Wheat not suspected of being too Luxuriant.

If after the last Horse-hoing there should be occasion for another Hoing of the Intervals; where the Narrowness of them, and the Leaning of tall Wheat make it difficult or dangerous to be performed by the Hoe-Plow, a slight shallow Hoing may be performed therein by the Hand-Hoe with Ease and Safety, at a very small Expence, which will be more than doubly repaid in the following Crops.

P. 65. L. 24. *Being situate upon a Hill, that consists, &c.*] In Contradiction to this Description, *Equivocus* in *p.* 31. of his *Essay for July*, describes it as follows, *viz.* "We know the Author's Farm called *Prosperous*, is a rich Soil, and lies on a Flat, which retains Moisture more than Up-Land declining Ground (especially Sandy or Gravelly) will."

Which of these two opposite repugnant Descriptions is true cannot be Difficult to determine.

As to its lying on a *Flat* contrary to a Hill, 'tis both known and seen to be one of the highest Farms in all that part of the County of *Berks* where it lies; it may be seen at ten or twelve Miles Distance, and was a more remarkable Eminence before the Trees were blown down by that memorable Storm in the Year 1703.

The Bulk of the Land belonging to this Farm, is on the South-Side for near a Mile in length, always called *Bitham-Hills*, and are for the most Part *declining* Grounds, a Sort of *graciles Clivi*, being all on a Chalk: In dry Weather the whole Staple looks of a *white* Colour, 'tis full of small Flints, and smaller Chalk-Stones; below these Hills is a Bottom, where are some Grounds upon a Chalk also, but had not then been used in *Hoing*, having lain with *St. Foin* 13 or 14 Years. On the West Side all the Land is called *East-Hills*, being on the East of the Farms to which they all formerly belonged. On the North-West Side is a high Field, called *Cooks-Hill*, and is the only Field of my Farm that is not upon a Chalk, it was a very wet spewy Soil of very little Value, until I made it *dry* by Plowing cross the Descent of the Hill. Every Body knows that *Chalk* is not *apt to retain Moisture*; and as to the *Richness* of the *Soil of my Farm*, if *Equivocus* could make this out to be true, I could easily forgive all the other Falsities of his Description, though it is scarce possible that any thing can be more false.

This Soil is all too light and too shallow to produce a tolerable Crop of Beans.

This Farm was made out of the Skirts of others, great Part of the Land was formerly a Sheep-Down: and whilst the whole was kept in the *Virgilian* Management (usual for such Land) it had the full Reputation of Poverty: The highest Part of it used to be sown (as I have been well informed) with *Oats* once in two or three Years upon the Back, and if the Summer proved dry, the Crop was not worth the Expence of that *Once-Plowing*: The Generality of Farmers were then of Opinion, that if this should be thoroughly tilled, and pulverized, it would become so light, that the Wind would blow the Staple away; but the contrary happened, for it being plowed *five* Times instead of *once*, it produced good Barley and other Corn, and never has returned to its former Degree of Lightness since, and this was above fifty Years ago. And now Tillage and foreign Grasses are come into Fashion, *enclosed* Lands which do not *Rot* Sheep, as not one Foot of mine is wet enough, or rich enough to do) are become of greater Value than formerly. And besides they allow that my Farm is one Third better for a Tenant, than when I took it into Hand, and yet I should be glad to *Let* it for half the Rent that rich Land is *Let* for.

Should *Equivocus* tell a Person who never was at *London*, That the *Monument* stands in *Smithfield*, or, that *London Bridge* is upon *Holborn-Hill*, it would not be more notoriously false, than his Description of my Farm is.

And that no Part of the true Description of that odious Crime (the plain Term for which ought not to be given *by* or *to* an *Englishman*, except to one as vile as *Equivocus*) might be wanting; he for the collective Body of his *Society*, pronounces in the plural Number, *We know*, &c. So that 'tis not ignorantly, but wilfully committed, by endeavouring to impose upon the World for a Truth, what they know to be false, with Intent to deceive.

He seems to have writ his false Description of my Farm for no other End, than to accuse me of that very Crime of which he himself is, in this Relation of his, indisputably Guilty; for if the Nature and Situation of my Land had been as he says, it would have made nothing for his Purpose in any other Respect.

That Society by publishing this and many other notorious Falsities, seems fond of being publickly known to be infamous Authors of no Veracity, and not to be credited by any Body who is not willing to be deceived; but Pity it is their particular Members should lose their merited Renown, for want of a proper List of Names and *Additions*.

P. 66. L. 30. *The Grease will not suffer, &c.*] *Urine* also makes the Wheat so greasy, that it will not be *dry* Time enough to be drilled.

P. 66. L. 43. *Use Quick-Lime, &c.*] But if this doth not afford Powder enough, the Pieces must be *slacked* immediately before using; for if the Lime lye long after it is *slacked* (especially that made of *Chalk*) it will become weak and lose most of its *drying* Quality.

Some Farmers use only to boil the strongest *Quick-Lime* in Water, with which instead of Brine they sprinkle their Wheat, affirming it to be as effectual as that for preventing the Smut; but this not being within the Compass of my own Experience, I am doubtful of it; yet I wish it may be found effectual, because it would save Trouble to the Sower, and more to the Driller.

P. 69. L. 17. *What Credit can be given to these Ancients who join, &c.*] 'Tis I suppose, on Account of this Paragraph, that *Equivocus* exclaims against me for having wronged the Ancients; perhaps he may give Credit to that pretended Invention of *Tarchon's*; and also to the following famous Remedy prescribed in *Verse* and *Prose* for the *Relief* and *Cure* of Plants, which is the same that is in *Prose* affirmed will destroy them.

Columella, *Lib.* x. *p.* 354. *At si nulla valet medicina repellere pestem,*
Dardaniæ veniant artes, mudataque plantas
Fœminæ; quæ justis tum demum operata juventæ
Legibus, obscæno manant pudibunda cruore,
Sed resoluta sinus, resoluto mœsta capillo,

Ter

Ter circum areolas, & sepem ducitur horti;
Quæ cum lustravit gradiens (mirabile visu!)
Non aliter quam decussa pluit arbore nimbus,
Vel teretis mali, vel tectæ cortice glandis,
Volvitur ad terram distorto corpore campe.

Pallad. *in Lib.* I. *p.* 28. *Atqui mulierem menstruantem, nusquam cinctam, solutis capillis, nudis pedibus contra Erucas, & cætera, hortum faciunt circumire.*

Compare the two preceding Paragraphs with the two following.

Columell. *p.* 395. *Rutæ frutex plurimis annis permanet innoxius, nisi si Mulier quæ in menstruis est contigeret & ob hoc exaruerit.*

Columell. *p.* 398. *Mulieris fere contactu languescunt incrementa virentium. Si vero etiam in menstruis fuerit, visu quoque suo novellos fœtus necabit.*

I think I have quoted enough from these ancient pious heathen Worthies, to shew their Truth in those Times, when Contradictions were true.

The next is an ingenious Remedy against a Storm.

Pallad. *p.* 31. *Nonnulli ubi instare malum viderint, oblato speculo imaginem nubis accipiunt, & hoc remedio nubem (seu ut sibi objecta displiceat, seu tanquam geminata alteri cedat) avertunt.*

Then follows the great Virtue of a Mare's, or an Ass's Scull, the Theory of which Notion, though it pass unobserved by most of the Vulgar, may afford Matter of curious Speculation to the Learned, especially such as *Equivocus*.

Ibid. *Equæ calvaria, sed non virginis, intra hortum ponendæ est, vel etiam asinæ, creduntur enim, sua præsentia, fœcundare quæ spectant.*

The ordinary Vulgar are not so inquisitive after the Causes of such Effects; but if they had read the ancient heathen Worthies, they might find the extraordinary fecundity of Mares (and I don't question but there was in those Times, the same in Asses) that did at certain Times conceive without the Assistance of the Male: Indeed *Varro* tells us, it is both true, and incredible.

Varr. *Lib.* ii. *Cap.* 1. *In fœtura res incredibilis est, sed est vera, quod quædam e vento concipiunt certo tempore equæ. Sed ex his equis, qui nati pulli, non plus triennium vivunt.*

If this Relation of the pious Worthy was as false as it is incredible, I do not see what Ground the Ancients had to make Trial of the above Receipt, before they put it into Practice, so far as to believe it themselves; and *Equivocus* doth not pretend to excuse by a *Licentia Poetica*, those Writers in Prose, for their Flights in propagating Falshoods to the World, which they did not seriously believe themselves:

Was it then the great Fruitfulness of the Mare, (for she must not be a Virgin) that endued her bare Scull with the Power of imparting her fecundity to Plants in that Manner?

I dare say none of our Moderns (except Vulgar) have Credulity enough to believe this Relation true, or that the Receipt was ever put in Practice; and then where is the Credit of such pious Worthies? But *Equivocus* may with a less Degree of Impossibility (if there are Degrees of Impossibilties) believe, that Females propagate their Kind without Males, than, with those Ancients, believe Equivocal Generation, by which Animals and Plants are propagated without Male or Female.

The next Specimen I shall give of ancient Doctrine is from *Columella*, *p.* 395. "*Cujus (mentæ) si forte* "*semina defecerunt, licet de novellibus sylvestre mentastrum colligere, atque ita inversis cacuminibus disponere,* "*qua res fericatem detrahit, atque edomitam reddit.*"

These Mints, though there is some Agreement in their Names, are of two very different Species; and therefore modern Naturalists can have no Faith in such a whimsical Metamorphosis, the Falsity of which may be easily shewn by Experiment, to confute what *Equivocus* calls 1700 Years Experience.

For Confirmation of what *Equivocus* from *Varro* directs about the Besmearing of Sheep, hear whence that *Patrius mos* was derived.

Var. *Lib.* 1. *Cap.* xxxvii. "*Ego ista etiam, inquit Agratius, non solum in ovibus tondendis, sed in meo Ca-* "*pillo a Patre acceptum servio, si discrescente Luna tondens calvus fiam.*"

But the World is now grown so incredulous, that they cannot believe that a Man will become Bald by being shaved at the wrong Time of the Moon, without more Experience than has been made of it for these 1700 Years past; though they have the Word of this honoured Worthy for the Truth of it.

If all these Phantasies delivered down to us from the Ancients, be looked on as inner Fables without any Foundation of Reason or Truth; why should we aquiesce in following that pretended Maxim, which though it hath deceived some Part of the World a great While, doth, when brought to the Test of Experiment, prove as falacious as the rest? Take it from *Columella* as follows:

Colum. *p.* 48. "*Item graciles clivi non sunt æstate arandi, sed circa Septembris Calendas: quoniam si ante hoc tempus proscinditur, effæta, & sine succo humus æstivo sole peruritur, nullasque virium reliquias habet.*

The Experience of 1700 Years no more proves this Practice to be right, than the long Experience of Cattle's drawing by their Tails proved that Practice right, before drawing by Traces was by Experiment proved to be better: for nothing can be depended on as Experience, which has not been tried by Experiment.

Columella himself proves the Contrary to this his *Maxim*, when he affirms (and with great Truth) that the more the Vineyards are pulveriz'd, the more they will produce. *Columella*, *p.* 578.

And

And Vineyards are generally on light Land, and very many on *graciles clivi* too steep for the Plow, yet if the Pulveration of these poor Vineyards be neglected, they will produce nothing, and in a few Years die; which proves, that the Neglect of Pulveration starves the Vines, and that the Use of it enriches that Soil, and doth not make it barren; for if it did, it would have a contrary Effect on the Vines. And what *Virgil* directs in all Vineyards without Exception, *viz.*

---------- Glebaque versis
Æternum frangenda bidentibus. ---------

would ruin most of the Vineyards of *Italy* and *France*, if Pulveration was destructive to light Land; for the Antients did not use to allow Dung to the Vineyards, as appears from *Cato de Re Rust. fol.* 17. *a.* and from *Columella*, *p.* 73. where 'tis said.

Stercus vitibus non ingerendum, quod saporem vini corrumperet.

This most elegant Author *Columella* is certainly much in the Wrong, when he directs this late plowed Land to be presently plowed again, *aratur & subinde iteratur.*

Twice Plowing for Wheat is worse than but once; for the *second* Plowing makes that Ground more hollow, causes more Seeds of annual Weeds to grow, and kills fewer of the perennial Weeds that lived on it whilst it was fallow, than the *first* Plowing alone would do. The *Second* is a Sort of Unplowing, for it turns the Turf the same Side uppermost as before it was plowed at all.

Such *Twice* Plowing for Wheat, I think, is the very worst Sort of insufficient Tillage.

But to bring this Heathen Doctrine to the Test, let Part of the same Land before Sowing be tilled for two Summers, and the Winter that is betwixt them, plowing it often enough to pulverize it, and to prevent Exhaustion by Vegetables; which Experiment will shew whether the *Summer Sun* doth strengthen or weaken, enrich or impoverish the Soil of those *Clivi*, more or less, by that mature Pulveration than by the two *late* Plowings directed by *Columella*.

I propose these frequent Plowings only by Way of Experiment; and not that I conclude from thence, that every Sort of such thin barren Land, will answer the Expence of so much Tillage; for though no Land may be strictly barren, yet some is so near being so, that 'tis unprofitable when kept in arable. I have observed, that the renting Price of rich arable Land, and poor, is not generally in Proportion to their respective Values; considering their different Goodness, the best Land is the best Bargain.

Words without Reason or Truth are *Sound* instead of Sense: See the following from the wise and grave *Cato* the Senior of the *Four* Worthies.

Luxum ut excantes, *M. Cato de Re Rust. fol.* 41. *b.*

"*Luxum, si quod est, hac cantione sanum fiet; arundinem prende tibi viridem* P. 4. *aut* 5 *longam. Mediam* "*dissinde, & duo homines teneant ad coxendices. Incipe cantare in alio,* S. F. *motas væta daries dardaries* "*astataries dissunapiter, usque dum coeant: ferrum insuper jactato. ubi coierint, & altera alteram tetigerit, id* "*manu prende & dextra sinistra præcide. Ad luxum aut ad fracturam alliga, sanum fiet, & tamen quotidie* "*cantato in alio,* S. F. *vel luxato. Vel hoc modo, huat hanat huat, ista sista sista, domiabo dannaustra, &* "*luxato. Vel hoc modo, huat huat huat ista sis tar sis ardannabon dunnaustra.*"

An *English* Translation of these *Roman* Authors, being promised to appear speedily, I need at present quote no more of their Theory or Practice, in Justification of the Opinion I have given of them in my *Essay* under this *Note*.

If what they wrote so long ago was then false, it cannot be true now; and we owe no Veneration to Falshood for the sake of its Antiquity, or of the fine Language in which it is written; though both these Advantages have a powerful Influence on Vulgar Minds, especially such as have more respect for *Sound* than for *Sense* and *Truth*.

But although by a natural Sympathy he has with Falshood, *Equivocus* may have an Attachment to antient Errors, and to defend what is wrong in these *Roman* Authors; yet 'tis possible it may be partly owing to his Ignorance, that he perverts what is right (if any Thing besides a fine Style be right) in them. He is so ignorant of the Difference there is between the Climate of *England*, and that of *Italy*, as in *p.* 143. of his *Essay for June*, to direct from *Columella* the Sowing of *Winter Vetches* for feeding green on the Ground by Cattle in the Winter, which has not Heat enough to bring them to a Substance for feeding of the fifth Part of the Value of the Seed sown, nor of the 20th Part, were we to sow so much on an Acre, as he directs, *viz.* six Bushels. The *Climate* of *Naples* is indeed so warm, that such Forage will grow to be a large Crop in Winter. *Equivocus* seems to be also partly led into this shameful Blunder by his Ignorance in the *Etymology* of the Name, in which he pretends to be so well learned: They are called *Winter* Vetches, because they are just able to endure the Cold without dying, and when Winter is over, they grow and become a Crop. But *Equivocus* thinks they have their *Name* on Account of being a Crop in the Winter. He is as ignorant too in the Difference of *English* and *Italian* Measures of Land and Corn, which makes him direct the sowing three or four Times more Seed than is necessary and usual to sow; and 'tis certain, that they sow less Seed of Vetches and Winter Corn in *Columella's* Country than here, because *there* none is killed by the Cold. *Equivocus* says, in *p.* 136. of his *Essay* for *May*, That "as the Situation and Soil of those Countries "are very different from that of *Great Britain*, few of their Rules will be here mentioned." But how he contradicts himself in this Particular, *see his Preface to September not paged*; where, to shew the World what an ignorant Pretender he is, he most ridiculously Reproaches all our *English* modern Authors for not recommending to our Countrymen those Rules and Precepts of antient *Romans*, which every Man of reason acquainted with the World must know are impossible to be practised in our Climate.

He prefers the Knowledge of the Antients in their Choice of Soils and their Manner of working and plowing them.

From the *first* he takes the great Discovery, that strong Land is better for Corn than light hollow Land; and gives this Reason for it, "For whatever the Husbandmen of any Age may think, Corn does not do so "well on Grounds, which are naturally hollow or light, as they do on those which are made so by plow-"ing; because in one, the Earth naturally closes in again round about the Roots, and keeps the Moisture "from being exhaled too fast; whereas Ground which is hollow or light, detains it not at all." Those are the poorest of all the Reasons that can be given to prove that strong Land is better than light; for 'tis from the

Misfortune

Misfortune of subsiding too soon, and retaining Moisture too long that our strongest Lands in wet Years fail of their Crops, when our light Lands produce good ones.

But the modern Reasons are these, *viz.* a Cubic Inch of strong Land, being heavier, is better in Quantity, and has more Earth in it than a Cubic Inch of light Land, as a Loaf without Leaven has more Bread in it than a levened Loaf of equal Dimensions; for 'tis the Weight that determines the true Quantity of a Soil and of Bread.

Also strong Land has generally a deeper *Staple*, whereby it exceeds light Land in Dimensions too; a superficial Foot of twelve Inches Depth having twice as many cubic Inches in it, as a superficial Foot of but six Inches depth.

And it may be a Question, whether this Advantage of Quantity both in Weight and Dimensions is not greater than the Advantage strong Land has over the *British* light Land, on Account of their different Qualities; for as the Specifick Lightness of light Land proceeds from some peculiar natural *Leaven*, which puffs up and distends its Pores, its Hollowness continues only whilst the Earth is in its natural State; and upon a perfect artificial Pulveration, the Hollowness and Lightness cease, for if you take a Pound of strong and a Pound of light Earth, and reduce them to a very fine (and almost impalpable) Powder, I believe, you will find that each will just fill a Box of equal Dimensions; but how long each, being exposed in the Field, will continue in this artificial State of equal Specifick Gravity cannot be exactly known from any Observations as yet made, though doubtless 'twill be the longer, by how much the more frequently they are stirred or agitated.

So much for the Difference in Quantity of these two Sorts of Soils; but the different Qualities by which each hath the Advantage over the other are too many for me to enumerate at present any farther than I have done in my *Essay*; wherein may be seen how false that Assertion of *Equivocus* is, *viz.* "Their (the "Moderns) Thoughts have reached no deeper than the Surface of the Earth, and though many Sorts of "Timber, nay Luserne, and a great many other Grass-Seeds, require Soils almost as deep as an Oak-Tree "does, there has not been one Word said of it by any one of them." *See* my *Chapters* of *Luserne*, of *St. Foin*, *&c.* Which shew this to be a false Calumny; and I verily believe there is not one Farmer in *England* that Rents an Acre of Land, without enquiring or examining into the Depth of the *Staple* of it; the Bottom of it is one of the first Views his Thoughts reach to, being aware, that the Depth of the Soil is one of the principal Things, whereon the Success of his Labour depends: Though if that Depth of Soil should be necessary, which this Pretender relates from *Columella*, our Farmers must throw away their Plows; for there would be neither Plowing nor Planting (except in a very few Places) in *Britain*; says he, "his "[*Columella*'s] Words are to the following memorable Effect, *viz.*

"*Nec contentos esse nos oportet, prima specie summi soli, sed diligenter exploranda est inferioris materiæ qualitas, terrena necne sit? Frumentis autem satis erit, si æque bona fuberit bipedana humus; arboribus altitudo "quatuor pedum abunde est.*"

Which he translates thus: "In the Choice of Soils we ought not to be contented with the Upper Face "or Surface of it, but should diligently seek the Qualities of the inferior Materials or Strata's below, to see "if it be a living Earth or good-Soil underneath (for so we understand the Word *Terrena* to signify;) Soil of "*a Foot thick*, if it be equally good, will do for Corn, but for the Trees it ought to be four Foot."

There is no doubt but that by the Words *Terrena humus*, *Columella* here means what we call the *Staple* or upper *Stratum* of Earth, wherein the Plow is or may be properly exercised; but for this learned Lawyer to translate *bipedana humus*, Soil of *a Foot thick*, instead of *two foot* thick, intimates a Design of imposing upon his "lower Class of Readers, who are not able to distinguish, *&c.*" and who would despise any Author that should give them Instructions to chuse a Soil that is scarce possible to be found, and harder to be had. For a Soil or *Staple* of Half a Foot or eight Inches deep would not be despised by any *Practical Farmer*.

Choice of Soil indeed seems to be of little Moment in *Britain*, where *Confiscations* and *Forfeitures* are more rare than they were in *Italy* in *Columella*'s Time, so that our Lands are seldom taken away from the antient Owners, to be distributed to such Men of *Merit* and Industry, as the *Equivocal* Society seem to hope they will. However that may be, let us whilst we have them, see the antient "Manner of Working and "Plowing them, in all which (*Equivocus* says) *Columella* has left Directions not to be excelled, and from "a Quotation of two Lines only from *Virgil* also, has said more on the Subject of Tillage than all the Mo-"derns have who wrote since; 'tis there that speaking of *putrid cold watry* Land, those two Authors direct "the Plowing of it as the only Method of bringing it into Tillage." A great Discovery, indeed, that Land is brought into Tillage by Plowing!

But what a Perverter is *Equivocus*, when he asserts, that *Virgil* means *putrid*, *cold*, *watry* Land by *Nigra fere & pinguis terra, cui putre solum, optima frumentis*; which is evidently a *blackish*, *fat*, *mellow* Land, and the *best* of Soils, as *putrid*, *cold*, *watry* Land is the very worst; for the Society say in *p.* xv. of *Preface* to *August*, that the too great Quantity of Water standing too near the Surface is as great a Cause of Barrenness as the entire Want of it: But yet a Soil that is *naturally* mellow, differs much from a Soil which is made so by plowing; and the most mellow Soil that is, will produce but little Corn without plowing.

Equivocus, to shew farther his utmost Ignorance in the Subject he pretends to write of, gives the World the following false Translation of Part of *Columella*'s 4th *Chapter*, *Lib.* XI.

Medium igitur temperamentum maxime sequamur in arandis agris; ut neque succo careant, nec abundent uligine.

Which he renders thus in *English*, "that we chiefly have Regard to a *Medium* or Temperature of Wea-"ther in the Plowing of our Fields, even so as that they may not want proper *Moisture* for the Nourishment, "nor abound so much with it as to spoil the Corn." He perverts the Sense of *Columella* by foisting in *the Spoiling* of *Corn*, by the too much or too little Moisture, when the Degree of Moisture relates only to the Effect it has on the Pulveration of that Land; for he must be very ignorant to think, that the same Degree of Moisture, in which the Fields are plowed will continue in them till the Corn has occasion of it, since there is always an absolute Necessity of Vicissitudes of Weather, after this first Plowing, e'er the Fields can be made fit to be sown with Corn.

The next Thing, on Account of which he extols the Antients, and reproaches the Moderns, is the Sorts of Wheat the antient Sages were possessed of, that are not sufficiently regarded by the Moderns, *viz.* the *Bimestre*

mestre and *Trimestre* "so called from their ripening in two or three Months after they were sown." And one of them (from *Pliny*) was ripe in forty Days after it was sown; but after the Advantages he proposes from our Sowing them, and all his Quotations and *Etymologies* of them, though the one be called *Triticum æstivum & Trimestre Pœnæ*, and the other *Triticum æstivum & Zeopyrum tritico speltum*, this *Virtuoso* doth not pretend he ever saw either of them; and allows that he does not know whether they are Wheat or Barley; and yet reproaches our Modern Authors for having "said so little of it, that it is difficult "in general to understand what they sow those Grains for; though some few practical Farmers in *Stafford* "and *Oxfordshire*, *&c.* may." If they are sown by the *practical* Farmers so near *London*, 'tis Wonder this *practical* Farmer should be no better informed concerning those wonderful hasty advantageous Grains.

The Reason and Truth of these antient Worthies appear pretty equally in their erroneous Poetical *Religion*, *Astronomy* and *Agriculture*, any one of them may be defended as well as the other; for that *dead Men* are *Gods* or *Stars*; that the Sun *sets* in the *Sea*; and that *Pulveration* is Poison to *light* Land are equal Absurdities; and he who writes for restoring such Errors of the Antients, tho' his Language in *Verse* or in *Prose* should be as *fine* as theirs, it can be but *Sound*, instead of *Sense*.

P. 70. L. 17. *Though the Produce of the South be the greatest.*] This proves that the Crop doth not lodge on Account of its Bigness.

P. 70. L. 30. *As by the white Colour it appears.*] But now I suspect this to be a Mistake, it being more likely, that the white Colour of the Rind is owing to the Absence of the Sun and free Air, than to the Chyle, as the Skin of those Parts of our own Bodies that are concealed from them, is whiter than of those which are exposed to them, though no Chyle Vessel comes near our Skin.

P. 72. L. 51. *Whenever Sheep break into my Drilled Wheat*, &c.] There are several Reasons why Sheep are more injurious to drilled Wheat than sown; I would not therefore be understood to decry the Practice of feeding sown Wheat, when the Thickness and Irregularity of its Plants make it necessary: I have only endeavoured to shew, that that Practice is founded upon a false Theory: For if Wheat fell down by Reason of the Luxuriance of it, a Plant of it would be more likely to fall when single and at a great Distance from every other Plant, than when near to other Plants, because such a single Plant is (*ceteris paribus*) always the most luxuriant; and I have not seen such a one fall (except Birds pull down the Ears,) but have observed the Contrary, though its Ears are the largest.

The Subject I write on is Drilling and Hoing, and of whatsoever else I think relates to the Practice or Theory thereof, which obliges me to advise against Drilling too thick upon any Sort of Land; but more especially upon very rich Land: For though I have no such Land, yet I apprehend that a too great Number of Plants may overstock the Rows, and cause them to be liable to some of the Inconveniencies of sown Wheat; and in such a Case, perhaps, Sheep may be rather useful than prejudicial to the drilled Wheat; but of this I have had no Experience: And if it should be too thick, it will be owing to the Fault of the Manager or Driller, but I suppose it might be a better Remedy to cut out the superfluous Plants by the Hand-Hoe, in the Manner that superfluous Turneps are hoed out.

P. 74. L. 22. *Take away so much Nourishment as to turn the Colour.*] But this is a very difficult Matter.

P. 75. L. 19. *Settle about the Roots, and cover them.*] Some Land is very subject to the Misfortune of exposing the Roots, and therefore is less proper for Wheat; for when the Roots are left bare to the Air, they will be shrivelled and unable to support the Plants: And on such Lands the Wheat Plants have all fallen down, though in Number and Bigness not sufficient to have produced the 4th Part of a tolerable Crop if they had stood.

I am inclined to believe, that a thorough Tillage might be a Remedy to such a loose hollow Soil; for 'tis certain to a Demonstration, that it would render it more *dense*, and increase its specifick Gravity: But to enrich it sufficiently without Manure the Tillage must pulverize it much more minutely, and expose it longer than is required for the strongest Land. The Fold also will be very helpful on such hollow Land; but the long strawy Dung, that *Equivocus* prescribes to it, must needs make it more hollow.

P. 76. L. 41. *Water kills the Root.*] If there be Springs near (or within several Foot of) the Surface of the Soil, *St. Foin* will die therein in Winter, even after it has been vigourous in the first Summer; and also after it hath produced a great Crop in the second Summer.

P. 76. L. 50. *Not to suffer it* [St. Foin Seed] *to be covered deep in any Land.*] I am told, (but I believe it may be by Mistake, I never having seen Mr. *Miller*'s Book,) that Mr. *Miller* in his *Gardener's Dictionary* affirms, that *St. Foin* Seed will come up when planted seven or eight Inches deep. If any one has planted it with a Gage at that Depth, and seeing it come up, has taken it out of the Ground, measured the Neck between the Husk and the two first Leaves, and found it to be of the mentioned length, he must believe it; but without such a Trial, I own it is to me very incredible. It has indeed in very hollow puffy new-broke Meadow-land, come up from something above two Inches depth, its Neck being of that length; but here the Mould was so exceeding light and hollow, that it made very little Resistance against the rising Head: In common arable Land, I never saw a St. Foin Neck so long, and I have examined a Multitude of them. I have also found many Hundreds of them to miscarry by not being able to push their Heads through the incumbent Mould when covered but half an Inch deep in the Channels, when a sudden Dash of Rain has come upon *white* Land immediately after Drilling.

Perhaps some may imagine, that St. Foin comes up from a great Depth, when sown under Furrow: But this is a Mistake; for 'tis only the Seeds which lie shallow that come up, the deep are all buried. Of the great Quantity they sow, there are always enough that lie shallow; for the Furrow in turning doth not throw the Seeds all under it when the Earth is fine, and the Seeds (their Husks making them of less specifick Gravity than the Earth) rise upwards when moved by the Harrow-tines; and the greatest Part of such a large Quantity of Seeds being buried and dead is often a great Advantage to the Crop; for should they all come up, the Land might be unmeasurably overstock'd with Plants.

P. 78. L. 5. *Produced a Crop double to the rest*, *&c.*] But *Note*; this Acre was dung'd and in better Order than the rest.

P. 78. L. 14. *Did plow and scratch out a Multitude of its Plants.*] This plowing and scratching was a Sort of Hoing which helped the St. Foin by a small Degree of Pulveration, as well as by making the Plants thinner.

P. 79. L. 18. *Three Tun of St. Foin to an Acre, &c.*] This was on rich deep Land in *Oxfordshire*; and the other St. Foin which was so poor, was on thin *Sclate* Land near *Caustham* in *Wiltshire* in the *Bath-Road*. It is now about thirty Years since

P. 80. L. 14. *Never to expect a full Crop of St. Foin the first Year, &c.*] But when it has been planted on rich sandy Land and proper, it has produced very great Crops the first Year; but then the Summer wherein it grew amongst the Barley must not be reckoned as the first Year.

P. 81. L. *ult. I never use any Manure on my St. Foin.*] 'Twas because mine generally had no Occasion for Manure before it was old; and *Soot* is seldom to be had of sufficient Quantity in the Country, and little *Coal* is burnt hereabouts, except by the *Smiths* whose *Ashes* are not good. The Price and Carriage of *Peat-Ash* will be ten Shillings for an Acre, which would yet be well bestowed in a Place where Hay is vendible; but by reason of the great Quantity of water'd Meadows and Plenty of St. Foin, Clover and Hay raised of late Years by Farmers for their own Use, here are now few or no Buyers of Hay, especially these open Winters: So that laying out Money in that Manner would be in Effect to buy what I cannot sell. I think it better to let a little more Land lie still in St. Foin, than to be at the Expence of Manure; but yet shall not neglect to use it, when I shall find it likely to be profitable to me.

P. 83. L. 40. *The Sun never shone upon it.*] This also was an Advantage to this Hay; for Apothecaries find that Herbs dried in the Shade retain much more of their Virtue than those dried in the Sun; but Farmers not having any such Conveniency of Drying their Hay in the Shade with Safety, must always chuse to dry it by the Sun; because in cloudy Weather there is Danger of Rain; and therefore such excellent Hay must be had by Chance; for to be well made in the Shade, it must be in Danger of being spoiled or damaged by Rain.

P. 85. L. 43. *In small round Ricks.*] But not to be afterwards made into large ones at *Equivocus* directs.

P. 87. L. 31. *To Cure the Seed: If that be neglected, it will be of little or no Value.*] But there is yet another Care to be taken of St. Foin Seed besides the curing it; and that is, to keep it from Rats and Mice after 'tis cured, else if their Number be large, they will in a Winter eat up all the Seed of a considerable Quantity, leaving only empty Husks, which to the Eye appear the same as when the Seeds are in 'em. A Man cannot without Difficulty take a Seed out of its Husk; but the Vermin are so dexterous at it, that they will eat the Seed almost as fast out of the Husks, as if they were pulled out for them. I saw a Rat killed, as he was running from a Heap of it, that had seven peeled Seeds in his Mouth not swallow'd, which is a Sign that he was not long in taking them out. They take them out so cleverly, that the Hole in the Husk shuts itself up when the Seed is out of it. But if you feel the Husk between your Finger and Thumb you will find it empty. Also a Sackful of them is very light, yet there have been some so ignorant and incurious as to sow such empty Husks for several Years successively, and none coming up, they concluded their Land to be improper for St. Foin.

P. 87. L. 59. *But only just separate the Swarths in the Dew, &c.*] This being done in the Dew prevents the Damage of Rubbing out the Seed, which would be unavoidable, if the Swarths should be separated when dry.

P. 90. L. 19. *Clover often spoils a Crop of Barley.*] But this Damage may be prevented by Drilling the Clover after the Barley is a handful high or more; for then the Barley will keep it under, and not suffer it to grow to any considerable Bigness till after Harvest, nor will this Drill, being drawn by Hand, do any Damage to the Barley.

P. 92. L. 17. *Why English Arable is of so much less Value than Foreign?* 'Tis doubtless from the extraordinary Price of *English* Labour above that of other Countries, occasioned by *English* Statutes being in this Respect different from all other Laws in the World.

P. 93. L. 8. *To prevent their Swelling, &c.*] The Swelling of Cattle by eating too much green Luserne, Clover or Turnep-Leaves, happens only to such as chew the *Cud*, because these swallow more in less Time than other Cattle do; and a large Quantity of such luscious Greens being swallow'd by a Beast, fermenting to a great Degree, heats and rarifies the internal Air, which by its Spring becoming too strong for that Column of the Atmosphere that enters at the Trachea, it presses the Lungs against the *Thorax* so closely, that the Weight of the External Column is not of Force to open their Vescicles, and then the Circulation of the Blood is stopt, and the Beast is strangled.

Most Farmers know how to prevent the Swelling, so that now a-days it seldom happens; but when it does, there is an effectual Way of curing it, if taken in Time; They cut a Hole into the Maw near the Back in a proper Manner, whereat the rarified Air rushes out, and the Lungs again perform their Action of Respiration.

But that any Sort of good dry Hay, whether made of Luserne or any other Grass, would cause this Misfortune of Swelling, I never heard was said by any Body except *Equivocus*, and he appearing to be a Person of no Veracity, I have no Reason to believe it from his Assertion.

P. 97. L. 19. *When Luserne has been plowed.*] This Plowing is a Hoing to the Luserne.

P. 100. L. 5. *Begin with Rows that have Intervals of thirty Inches.*] Hence, I suppose it is, that *Equivocus* pretends to question whether my Drill-plows will plant the Rows of Luserne any nearer together than thirty Inches; but in Truth 'tis as easy to plant them at three Inches and a half asunder by a double Drill-plow that may be made to plant thirteen Rows or more at once; but I think such a Distance much too little for any Sort of Seed, except Flax-Seed.

P. 101. L. 47. *Lest the plowed Earth injure the Hay that is made upon it.*] But you may leave every third or fourth Interval unhoed for making the Hay on, which will yet be more beneficial, if the Swarths in Mowing should fall thereon. This unhoed Interval may be plowed when there is Occasion, and another left in its Stead.

P. 102. L. 47. *Let the Soil be ever so proper.*] I have not one Field that is either warm enough or rich enough for me to expect Success in planting *Luserne* on it.

P. 104. L. 27. *There can be no Use of Changing of Sorts, in respect of different Nourishment.*] *Quære* Whether *Equivocus* allowing, that the same Nourishment is common to all Plants, and proper to none; and yet affirming the Necessity of changing the Species of Plants on Account of the Quality of the Nourishment, doth not in effect grant the *Premiss*, and deny the *Conclusion*?

P. 106. L. 25. *I will by no means call in question the Veracity of so learned and good a Man (as Dr.* Woodward*) and therefore, &c.*] I am reproached by *Equivocus* for insulting the Ashes of this Gentleman; but in Truth he was living, when I wrote this *Chapter*; I am sure I believed so: And I hope what I have writ can no way reflect upon the *Doctor*'s Memory; but as he was a Man, and liable to be deceived by a too great Zeal for a favourite *Hypothesis*, which sometimes makes one imagine one sees a Thing that has no real Existence; this Observation of the *Doctor's*, as he expresses it, seeming to have been made by Inspection upon a Glass of Water with Earth in it, for the Discovery of all the different Sorts of Particles in that Earth; if I had contradicted the Result of his Observation concerning the "vegetable Matter, consisting "of very different Particles; some of which (the Doctor says) are proper for the Nourishment of some kinds "of Plants, others for different Sorts, &c." as to Fact related from a clear ocular Inspection, it might have reflected more on the *Doctor*'s Ingenuity, than to impute it, as I have, to the Effect of mere Imagination, seduced by a Zeal for his *Hypothesis*.

However, at the worst, I presume, the refuting and exposing an Error so injurious to Mankind, may atone for an Expression or two in my Arguments thereupon, which are not injurious to the Probity or Veracity of him who advanced that Error; but that are rather an Excuse for his Mistake: And, if *Equivocus* speaks true, when he saith, that *Columella*'s first *Essay* was written to ridicule an Error of his Contemporaries, why should not an Error so fundamental as this be ridiculed now, since its being shewn to be ridiculous is an Argument that weighs more with many Husbandmen, than Demonstration? And I think that no Argument, consistent with Truth should be omitted, which can any Way conduce to the Establishing a Principle that is essential towards treating of Agriculture as a Science.

P. 108. L. 22. *Alter'd sufficiently by their Vessels to poison and kill the Tree.*] Some of the *Anticircularians* (but Mr. *Bradley* was not one) may believe, that the Chyle is altered and made into Sap in the Roots: But the Experiment of my Mint (*G*) in *p.* 5. will shew that no such Alteration is made in the Roots.

P. 109. L. 49. *As that must mix with the Sap, &c.*] The Nutriment or Chyle that a Root takes in, must mix with the Sap in the Leaves, unless some of it happens to pass out at other Roots in the Manner described in my *Note* upon *Circulation*.

P. 112. L. 16. *The same Quantity of Tillage will produce the same Quantity of Food in the same Land.*] Add *ceteris paribus*; for when the Land has been more exhausted, more Tillage (or Dung) or *Rest* will be required to produce the same Quantity of Food, than when the Land hath been less exhausted. By Tillage is here meant, not only the Number of Plowings, but the Degree of Division or Pulveration of the Soil; or, if perchance the Soil is extraordinary much exhausted by many Crops without proper Tillage between them, the greater Degree of Pulveration, by Plowing or Dung (which is only a *Succedaneum* of Tillage,) and also a longer Time of Exposure may be necessary to counterpoise that extraordinary Exhaustion.

P. 113. L. 9. *Turneps never thrive well immediately after Clover.*] But when Clover hath been fed by Cattle, and the Ground being good and well tilled, Turneps may thrive immediately after Clover; therefore this is an Exception to the general Rule.

P. 113. L. 28. *Consisting of a watry Substance which cools the Vessels, &c.*] A Turnep, 'tis like, has larger Chyle-Vessels in Proportion to its Sap-Vessels, than many other Sorts of Plants have; and the greatest Part of this Chile being Water, it may well be supposed colder than Sap.

P. 114. L. 9. *Towards which the Rotting of the Clover and St. Foin Roots do not a little contribute.*] That the Rotting of vegetable Roots in the Ground doth ferment therein, and improve it for horizontal rooted Plants, I am convinced by an Accident, *viz.* my Man had plowed off the Earth close to the Rows in a Field of extraordinary large Turneps design'd for Seed. This Earth was neglected to be thrown back to the Rows until a severe Frost in the Winter came and killed the Turneps; upon which in the Spring the Field was sown with Barley upon the Level with only *once* Plowing, and that cross-ways of the Rows. The Turneps had stood so wide asunder, that the Spot whereon each had rotted appeared like the Spot whereon a Horse hath urined in tilled Ground, and was of a deeper Colour and much higher than the Barley that grew round those Spots, and yet none of it was poor. As the Roots of Clover and St. Foin are very much less, yet the greater Number rotting in plow'd Ground must be of great Use to a following Crop of Corn.

I will here relate two Examples of this in St. Foin: the one is, That a Field of twenty-five Acres drilled with St. Foin except three Acres in the Middle of it, which was at the same time sown with Hop-Clover; after eight Years the whole Field was plowed up by a Tenant, and sown with Corn: The St. Foin had been *mowed* yearly as the Hop-Clover was not *mowed* at all, but fed by Horses tedder'd (or staked) thereon the first and second Years, and after that had nothing on it, but poor natural Grass.

The whole Field was managed alike when plowed up; but the three Acres produced visibly worse Crops of Corn than the rest all round it, which had produced St. Foin.

The other Example, or Instance, was, where an Acre, Part of a Field, was by a Fancy drilled with St. Foin in single Rows, about 33 Inches asunder, but was never hoed: After seven Years it was plowed up with the rest of the Field cross the Rows, and sown with Oats upon the *Back* three Months after Plowing. These Rows were as visible in the Oats, as if the *St. Foin* had been still remaining there. The Oats in the Rows where the St. Foin had been, looked of a deep green flourishing Colour at first coming up, and until they were about half a Foot high, and the Spaces between them looked yellowish; but afterwards the Difference of their Colour disappeared, all the Crop being very good. Upon this I imputed it to the rotting of the Roots, which by their Singleness were very large; and when the different Colours disappeared, I suppose the Roots of all the Oats had reached to the Benefit of the rotted Roots, which might also be then spread further into the Spaces, and I doubt not but that the Rotting of *Broad Clover* Roots has the same Effect as of *St. Foin*, for Manuring of Land, especially when the Roots are large.

P. 115. L. 15. *Some Sort of hollow Matter next under the Staple, &c.*] This hollow Matter lets the Water pass down the sooner from the Surface, whereby the Staple of the Ground becomes the drier, and consequently warmer.

P. 115. L. 33. *Be ripe two or three Weeks sooner than any other, &c.*] Barley is far from being improved by becoming *Rath-ripe*; for it loses more good Qualities than it gets by being sown at *Patney*: 'Tis so tender, that if it be sown *early* the Frost is apt to kill it; or if it be sown *late* in *May* on the same Day, and in the same Soil with the same Sort of Barley that is not *Rath-ripe*, it will be much thinner bodied than the *late ripe*; and besides, if it happens to have any Check by Cold or Drought it never recovers it as the

other doth, at what Time soever it is sown. 'Tis now, as I am informed, gone out of Fashion, and very few Farmers have sown it of late Years. I know a little Parish that I believe formerly lost about 200 *l. per Ann.* by sowing *Rath-ripe* Barley: But long and dear Experience hath now convinced them of their Error, and obliged them totally to disuse it.

P. 116. L. 7. *Other Plants being Exoticks, many of them as to their Individuals, require Culture and Change of Soil, &c.*] *Equivocus*, like his lower Class of Readers, which he describes, is unable or unwilling to distinguish the Difference of Change of a Species of Plants from the Change of its Individuals; when he pretends to bring as an Argument the degenerating of the Individuals of Beans, *&c.* to prove the Necessity of changing the Species of them.

P. 116. L. 10. *That the Soil can cause Wheat to degenerate into Rye, &c.*] *Equivocus* fond of every thing that has no Foundation of Truth, asserts, "That Barley *will degenerate into Bigg*," which is a very different Species; and yet he doth not own from whence he stole this wonderful Discovery.

P. 117. L. 4. *Trenches cross the Hill horizontally.*] For if they are made with the Descent, and not cross it, then they will be parallel to the Rills of Water that run upon the Surface of the Clay under the Staple (or upper *Stratum* of Mould) and would be no more effectual for draining the Hill, than the Digging of one River parallel to another, without joining it in any Part, would be effectual for draining the other River of its Water.

P. 117. L. 23. *The Water's Course cross the Lands will be longer.*] The natural Course of Water being *downwards* it would always run by the nearest Way to the Bottom of the Hill, if nothing stop it; but the Water runs from a Hill in two Manners, *viz.* Upon the Surface of the Staple, and upon the Surface of the Clay that is under the Staple; that which runs under keeps its streight Course from the Top to the Bottom of a Hill under a Ridge that is made exactly with the Descent of the Hill, except that Part of the Water that rises up into the Mould, and a very little that soaks into the Furrows; for when the Furrows are not made exactly with the Descent, the more oblique they are to the Descent, the longer will be the Water's Course under the Ridges; and the shorter, as they are nearer being at Right Angles to the Descent. 'Tis also the same with the Water that falls upon the Surface of the Ridges, for the more horizontal they are, the shorter its Course will be from them to the Furrows, which carry it off; and the less of the Water will sink into the Ridges, the less oblique and nearer to the Right Angles to the Descent they are made.

P. 118. L. 19. *Very few Farmers will alter their old Method; no, not even to try the Experiment.*] Of such Force is that Precep of *Virgil's*, *Cultusque, habitusque locorum (prædiscere,)* that seldom is the Prejudice of it removed by Reason: But some of late are convinced, by observing that a Hill of mine has been made dry by this Means for fourteen Years past, which before was always more wet and spewy than any Field in the Neighbourhood, and from the Time of inclosing it out of a *Heath* (or *Common*) and the converting it to arable, which was about seventy Years ago, it had been reputed as little better than barren, on Account of its Wetness; and that it has been the most profitable Field of my Farm ever since it has been under this new Management. I have also another Field that lies about a Mile and a half from me, it doth not belong to the Farm where I live, but was thrown upon my Hands, no Tenant caring to rent it, because great Part of it was full of Springs and barren; this also having been kept in Lands plowed cross the Descent, (which is but a small Declivity) is become dry; and now the most prejudiced Farmers agree, that keeping the Lands or Ridges of wet Ground always cross the Descent doth cure its Spewyness. Hereupon some have attempted to put this Method in Practice on their wet Land, and after it had been will tilled up Hill and down, have plowed it the last Time for sowing of Wheat, in flat Lands cross the Descent; but by Mismanagement their Furrows are higher at each End than their Middle, so that none of the Water can run off either downwards or Sideways, or any other Way.

Had the Furrows carried off the Water at both or either of their Ends, it might have been effectual, notwithstanding the broad Lands, because their Ground hath a much less Declivity, and is much less spewy than my Hill was: They will doubtless find their Mistake and amend it, having a Precedent before their Eyes; but if they had none within their own Inspection, I question whether this Mismanagement might not discourage them from prosecuting their Project any further.

P. 121. L. 18. *There are other Reasons why, &c.*] To the three we may add a fourth Reason, *viz.* the raising the Thickness of the Staple in the Ridges, keeping the Surface drier in wet Weather, and moister at the Bottom of the Staple in dry Weather. And I have seen Barley that was drilled on my raised little Ridges flourish in a dry Summer on the Brow of my Chalky Hill, and on my lowest Land in wet Weather, when the Barley hand-sown contiguous to it on each Side those Ridges, sown on the Level the same Day that the Ridges were drilled, have looked yellow and sickly, and yet it is not wet Land.

P. 121. L. 39. *Any larger or higher Ridges than what may contain six Feet in Breadth.*] Since the Printing of my Essay, I find upon Trial that these narrow Ridges are as effectual as any for carrying the Water off from my clayey Hill; and that they may be made much less horizontal than broad Ridges; whereby their Furrows are the more easily turned upwards against the Declivity.

I have not tried any narrower Ridges than of six Foot upon this Hill: But I have had full Experience of Five Foot and of Four Foot Ridges upon other Land, and find that all Sizes of these narrow Ridges are very advantageous even where the Crop is to be sown upon the Level: for fewer Furrows are necessary for the tilling of an Acre, when 'tis kept in such Ridges, than in broad Lands, and after wet Weather the Ridges will be fit to be plowed much sooner than level Ground.

P. 122. L. 1. *The Old and New Husbandry.*] I do not say that every Species of old Husbandry is *Virgilian*; for when Land of all Sorts is plow'd five or six Times with due Intermissions, instead of *once or twice*, in that respect it is rather *Antivirgilian*; though it is not the *Horse-Hoing* Method, which I call the *new* Husbandry, because not practised but for about these fourteen last Years, that I know of.

P. 122. L. 31. *Dung and Carriage at 2 l. 10 s.*] The Price of Dung is different in different Places, and the Price of Carriage varies according to the Distance: It would cost me much more than fifty Shillings to buy Dung and hire the Carriage of it for an Acre; and in many Places the Expence of it is greater yet, though *Equivocus* is pleased to set it from 40 *s.* to 44 *s.* for an Acre: Yet in his *Essay for June, p.* 61. he sets Dung at 2 *s.* a Load, and then 30 Load to an Acre, which are commonly laid, and 30 *s.* for Carriage and Spreading makes the Expence of Dunging an Acre amount to 4 *l.* 10 *s.* and yet he says, that in a dry Summer Dung may burn up and spoil the Crop.

Were

Were I to buy Dung at the nearest Place where any is to be Sold, the very carriage of it to my Land would be worth above five Pounds for each Acre.

Equivocus in his *Essay* for *May, p.* 228. says, Land that had been the most dung'd brought the worst Crop of Corn.

He says the Dung being for two Years, ought to be reckoned but half of it to the first Year: In Answer to this, I say, that though it may be, as he alledges, in the common Husbandry, yet in this *Comparative* Calculation, the whole Expence of Dung must be charged to the first Year; because a Crop sown in the Common Manner upon the Level, the next Year after a hoed Crop without Dung is always as good or better than when sowed the next Year after a dunged sown Crop.

P. 123. L. 28. *May require four Oxen each.*] But the Number of Oxen required will be according to their Bigness and Strength, and to the Depth and Strength of the Soil, which also will be the easier Draught for the Oxen, the oftner the Intervals are hoed.

P. 123. L. 37. *These are the Hours the Statute has appointed all Labourers to work, during the Summer Half Year.*] This is the Time limited by the *Words* of the Statute; but the *Meaning* is to be determined by the unlimited *Magistrates*, who are to put the same in Execution; and some of them, (and their Determination has the same Effect as of all) have lately declared, that if a Labourer works an Hour, he must be paid for a Day, which makes some Alteration in the Price of Tillage of all Sorts.

P. 123. L. 48. *But we do not always hoe six Times afterwards.*] But 'tis better for successive Wheat-Crops to bestow the Labour of as many Hoings as amount to three plain Plowings in a Year, it being a greater Damage to omit one necessary Hoing, than is the Expence of several Hoings.

P. 123. L. 49. *An Ox may be well kept, &c.*] Upon more Experience 'tis found that St. Foin Hay alone, or with a small Quantity of Turneps, is best for working Oxen in the Winter; but a Plenty of Turneps with the same Hay is better for fatting Oxen that do not work.

P. 124. L. 16. *Six-pence an Acre for Weeding.*] This may be enough, if the Land be well cleansed the Year before, and considering that several Years in such there is no occasion for Weeding at all: And as this Calculation is comparative with the old Way, we should examine the Price of Weeding the sown Corn, which by the best Information I can get is this Year 1735, about 4 *s. per* Acre for Weeding of Barley, and of Wheat round about where I live about 6 *s.* and in *Wiltshire* 15 *s. per* Acre for their Wheat, amongst which much Damage is done by the Weeders Feet, and yet some Weeds are left.

P. 124. L. 28. *More Sheaves to a Bushel of the Sowed, than of the Drilled.*] One Sheaf of the latter will yield more Wheat than two of the former of equal Diameter.

P. 124. L. 41. *For the Year's Rent of the Fallow.*] I am wrongfully accused of Partiality by *Equivocus*, for charging the Year's Fallow to the Calculation of the Expences in the old Way, and not to that in the new: When in our successive Crops we have no Fallow, but in the *Old* there is generally and almost always a Fallow for Wheat; and therefore two Years Rent to be reckoned for their one Crop.

P. 124. L. 44. *But where there is no Conveniency of keeping Oxen.*] And there is no such Conveniency in a Farm that consists in Common Field arable Land, without Meadow or Pasture; nor on such a dry chalky Hill-Farm as mine is, without a Competent Quantity of St. Foin, nor unless the other Part of it, which is kept in arable, be managed without Folding Sheep, because these will spoil the St. Foin; and therefore *Equivocus* is wrong when he says that Oxen are equally advantageous to the *Old* and to the *new* Husbandry; for they can be conveniently kept by the *New* on a Farm whereon they cannot be kept in the *Old* Husbandry; he himself affirming that Oxen cannot be kept without rich Pasture Land, of which mine and very many other Hill-Farms have none at all. But for *Equivocus* to take from hence an Occasion to insinuate, that I pretend to be an Inventor of Plowing with Oxen, and for him to cite *Fitzherbert* against me to prove that I am not; and *that I ought* not to have *the Honour of Broaching* it, is most ridiculously shameful in *Equivocus*, whose only Talent is *Pedantry*; and therefore he ought to know that Oxen were the first Drawers of the Plow, since a Heathen Poet says of *Ceres*, that she

Prima jugis Tauros supponere colla coegit,
Et veterem curvo dente revellit humum.

P. 127. L. 5. *We hope they* (the Weeds) *will grow to the End we may destroy them.*] For before they grow they cannot be killed; but if they are killed as soon as they appear, there will be no Danger of their Exhausting the Land or re-stocking it with their Seed: And 'tis our Fault if we drill more than we can keep clean from the Weeds by the *Horse-hoe*, *Hand-hoe* and *Hands*; the first for the Intervals, the second for the Partitions, and the third for the Rows: By the two former, as soon after they appear as they can; but by the last, when they are grown high enough to be conveniently taken hold of.

P. 127. L. 21. *Trench-Plow, where the Land will allow it.*] Very little of my Land will admit the Plow to go the Depth of two common Furrows without reaching the Chalk: But deep Land may be easily thus Trench-Plowed with great Advantage; and even when there is only the Depth of a single Furrow, *that* may sometimes be advantageously plowed at twice.

P. 127. L. 33. *Ridges to shelter it, &c.*] This is a Mistake; for the Ridges in the Middle of the Interval do not always, nor often in thin shallow Land lie high enough to make a shelter to the Rows, they being higher: But when Wheat is drilled on the Level, 'tis sheltered by the Ridges raised in the Intervals: But we never *weed* or *hand-hoe* Wheat before the Spring.

P. 127. L. 36. *The different Condition the Land is in after the Crop, &c.*] If indifferent Land be well pulverized by the Plow for one whole Year, it will produce a good Crop: But then, if instead of being sown, it be kept pulverized on for another Year without being exhausted by any Vegetables, it will acquire from the *Atmosphere* an extraordinary great Degree of Fertility more than it had before such second Year's Pulveration and Unexhaustion. This being granted, which no Man of Experience will deny, what Reason can there be why such a Number of Plants competent for a profitable Crop, may not be maintained on it the second Year that may keep the Degree of their Exhaustion in *Equilibrio* with that Degree of Fertility, which the same Land had acquired at the End of the first Year of its Pulveration, the same Degree of Pulveration being continued to it by Hoing in the second Year? Or why may it not produce annual Crops always, if the same *Equilibrium* be continually kept? Two unanswerable Reasons may be given, why this *Equilibrium* cannot be kept in the random Sowing, as it may be in the Hoing Method, *viz.* First, In the former

former, the Land is by the Number of sown Plants and Weeds much more (we may suppose at least five times more) exhausted: And, 2dly, No Pulveration is continued to the Soil, whilst the Crop is on it; which is that Part of the Year wherein is the most proper (if not the only proper) Season for Pulverizing: Therefore allowing, that in the random way a Soil cannot, for Want of Quantity of vegetable Food, continue to produce annual Crops without Manure, or perhaps with it; yet that is no Reason why it may not produce them in the Hoing Culture duly performed.

P. 128. L. 39. *No Fold being kept on my Farm.*] The Reasons why I keep no Sheep are many, *viz.* I have no *Common*, nor *Downs*, nor *Pasture*, nor *Meadow* to keep Sheep upon, and St. Foin is unfit for *Store* Sheep; so that if I kept a Fold I should be obliged to Till with Horses only, which (according to the Rules whereby our Servants, at present, are pleased to govern us) would cost me one full Rent more than the same Tillage done by Oxen. The Profit of Store Sheep depends much upon the Owner's Skill in managing them, in buying and selling them at proper Times, and in many other Circumstances; 'tis a Trade that I'm not Master of, nor can I have it well done by a Deputy. I find it very difficult to preserve my Corn from being spoiled by neighbouring Sheep, but if I had a Flock of my own, 'twould be more difficult; besides, the Trouble and continual Quarrels with Neighbours about Damages done and received. Thus the same Sheep would be detrimental to me that are profitable to others. Then as to the Fold, the Urine of Sheep is a great pulverizer of the Soil, and without which the *Virgilian* can do nothing, nor the common Farmer much; but in the Hoing Husbandry, I know by many Years Experience, there is no Necessity of a Fold, as there is not (in such a Farm as mine, managed by such an Occupier as I am) a Conveniency of keeping a Fold.

The low Price of *Wool* in *Britain* shews, that more Sheep are kept here, than are for the Publick Benefit, the too great Plenty of Wool being contrary to that of Corn, because Foreign Countries buy our Wool to supply their *Manufactures* in Prejudice to our own; and as the *French* have none of those *Statutes*, the Consequence of which enhaunces the Price of our Labour to double, and in some Works to quadruple of *theirs*, they can afford to pay above double the Price for Wool that our Cloathiers can, and yet undersel our Merchants of Cloth in Foreign Markets; and the more Foreigners have from us, the more will they stock those Markets with their Cloth. We are apt to have too much Wool, as appears by the Act for burying in Woollen, which because the Living are not sufficient to consume it, obliges the Dead to wear it.

Equivocus in his *Essay* for *April*, *p.* 17. affirms, that I say in my *Essay*, "that even the Dung and Urine of Sheep are of no Use in Husbandry;" But if the Reader cannot find that I have said so, he will be satisfy'd of the Want of *Veracity Equivocus* is guilty of here, as well as in his other false Quotations.

P. 128. L. 39. *But I cannot say I think there was quite so much Odds betwixt, &c.*] Is it not very unfair of *Equivocus* to represent the *Farmer*'s Opinion of the Odds, as if it were *mine*, when in the same *Paragraph* I contradict the Farmer's Opinion? That in my Account, I have not exaggerated the *Odds* of those different Crops, two of the noble Peers, whom *Equivocus* has had the Presumption to name (in *p.* 64. *of his Introduction to April*) and several Gentlemen, being all together Eye-Witnesses of it just before Harvest, could with Justice vindicate me from the false Imputation he would maliciously cast upon me, relating to the *Ipse Dixit*, which he has falsely quoted. Those two Crops grew within two or three Horses Length of one another, both on Hill Ground; mine was formerly a Sheep-Down, and the other a Cow-Down, and to this Day retains the Name of *Cow-Down-Hill*: The poor Crop had not too much Dung, nor was it a very dry Summer, which I mention in Answer to the Questions of *Equivocus*.

P. 128. L. 44. *That the Hoing (if it be duly performed) enriches the Soil more than Dung and Fallows, &c.*] This is more especially meant of *Virgilian* Fallows, and a moderate Quantity of Common Dung or the Fold: And there may be such a poor Sand, or other Barrenish Soil, so subject to *Constipation* in the Winter, as to require Dung when planted with Wheat, there being no general Rule without Exceptions; and 'tis impossible for me to know the Number of these Exceptions. Well it is for the Hoer, whose Land is of such a Kind, that he can keep it in *Heart* without Dung by Hoing; for when he has no Fold, plows his Ground with Oxen, and plants it mostly with Wheat, the Straw whereof being for other Uses, he can make very little Dung.

I have given Reasons for this my Opinion; and as far as the Authority of *Equivocus* goes, he confirms the first Part of it; for in *p.* 165. *of his Essay for August*, he gives up the Necessity of Dung, after all the Stir and Stench he has made of it; and says, "That fallowing *twice*, and sowing with Turneps, improve "Land more than Dung." And I believe it will appear upon full Trials, that our Hoings *duly and frequently performed*, may improve more than twice fallowing: Because by Hoing the Land is fallowed, and many Times iterated every Year, and if our Plants are only a bare competent Number, they may exhaust the Land less than a Crop of sown Turneps. All experienced Husbandmen (I do not mean such as have practised none but *Virgilian*) will allow, that a *Virgilian* Fallow (which *Equivocus* in *p.* 124, 125, of *his Essay for July* relates, is a very mean Improver of the Land.) He here affirms it for a "well known "Truth in Husbandry, that Wheat should never be sown but upon Ground which has been *once* or *twice* "plowed; and has lain fallow for a whole Summer." Indeed the Land lying still one Summer might not be much exhausted by the Wheat sown therein *without* once or twice Plowing: For it would produce none or very little.

P. 128. L. 49. *To pulverize it*, [the Soil] *and keep it from being exhausted by Vegetables.*] These two are all we have in our Power; for Pulverizing includes an Exposure to the *Atmosphere*, without which, I think, it cannot be reduced to Particles minute enough, or have their Superficies so impregnated as to become a fertile Pasture for Plants. The Experiment related by Mr. *Evelyn* of Artificial Pulveration, seems to prove such an Exposure necessary; as also the frequent turning (or incessantly agitating) that fine Dust for a Year, before the barren exhausted Earth was made rich and prolifick: For besides the Benefit of Pulveration and Impregnation, Land is more enriched in Proportion to the Time of Exposure, during which it is free from Exhaustion, and continually receiving from the Atmosphere; therefore frequent Turning and Exposure are both contained in the Words *pulverize and not exhaust*; and to comply with the latter, we should endeavour that our Land may be never exhausted by any other Plants than by those we would propagate, and by no more of them neither, than what are necessary for producing a reasonable Crop; which upon full Trial will be found a very small Number in Comparison to those that are commonly sown; and then if the Supply from the Atmosphere by Help of the Pulveration exceeds the Exhaustion, the Land will become richer tho' constant Crops are produced of the same Species; as in the Vineyards, and the Soil of these are so much improved

improved by a bare competent Exhaustion and the usual Pulveration, that after producing good annual Crops without Dung, until Age has killed the Vines, they leave the Soil better than they found it; and better than contiguous Land of the same Sort kept in arable Field-Culture.

By Pulveration are meant all the Benefits of it that accrue to the Pasture of Plants; and by Exhaustion, all the Injuries that can be done to that Pasture, except Burning. And as the Benefits of Pulveration visibly continue for several Years, so do the Injuries of Exhaustion; which appear by the Ends of some of my Rows that have been cleansed of Weeds in their Partitions by the Hand-hoe, and the other Ends of the same Rows not cleansed; the Difference is visible in the Colour of the Wheat in the Third and Fourth following Crops, equally managed; and this is no more to be wondered at, than that two unequal Sums being equally encreased or diminished, should remain unequal, until an Addition to the lesser, or a Substraction from the greater be made; which in Case of the Soil must be either by a greater Pulveration or a lesser Exhaustion.

Equivocus in the *last-mentioned Page* 125. relates that an Exposure of the Earth to the Sun all the Summer would rather enervate and impoverish than enrich an extraordinary fine *loamy* Land, or moldy Ground: But as it appears throughout his whole Treatise, that he is most fond of false Positions wherever he finds them; and when he does not find them, he forges them out of his own Brain; he must excuse me for suspecting this Position to be of the latter Sort, unless he can produce some other Author for it. I am sure 'tis contrary to all the Experience I ever saw in any Sort of Land, or heard of before on this Sort of Land.

P. 129. L. 20. *No more than twenty Bushels of Wheat* (on an Acre.] And they have oftner less than Sixteen Bushels; and this Harvest 1735. a substantial experienced Farmer had no more than four Bushels of Wheat to an Acre throughout a Field of forty Acres being robbed by *Poppies*; and I have known a Crop that has amounted to no more than two Bushels to an Acre, and some Crops less tho' dunged and fallowed; so that taking the common sown Crops of Wheat one with another, they are thought not to amount to sixteen Bushels to an Acre, *communibus annis*.

P. 130. L. 7. *The Remainder being two Thirds of the Whole, may be kept unexhausted, &c.*] This may be done, tho' the Roots of a competent Number of Plants run through the whole, in the Manner herein before explained.

P. 130. L. 40. *On an undunged low Six foot Ridge, &c.*] I have left off making low Ridges, unless when my Plowmen make them so against my Will; but when Land is drilled on the Level, they are always low, though they do become Ridges by the Furrows that are sunk on each Side of them by the Hoe-Plow: But these never produce the Middle Row equal to the other two; though in such the Earth raised up higher in the Middle of each Interval in the Winter is a Shelter to the Rows.

P. 130. L. 57. *The almost only Use of Manure, is the same as of Tillage, viz. The Pulveration, &c.*] *Equivocus* says this Opinion of Dr. *Woodward* concerning Manure hath been often confuted; but does not say how or by whom: and untill that be known I shall conclude the Doctor's Opinion herein unanswerable, being built upon a sure Foundation: The Matter of Fact is true, that the Salts of Dung will kill Plants, when *infumed* by them; and when the Operations made by those Salts upon the Body and Juices of a Plant are seen to kill it, 'tis not improper to say they poison it. 'Tis not enough for *Equivocus* to assert, that it is not the Quality but the Quantity of them that have this *deleterious* Effect; for he may assert the same Distinction in favour of almost any Poison; a small Quantity of which may be taken without causing Death. But a small Quantity of Salt killed the *Mints* in my *Experiments*, where only one String of a Root that had many, was put into the Salt.

But the greatest Quantity of Earth that a Plant ever *infumes* doth not kill but nourish it: Could it be shewn that those Salts mixt with moist Earth, did not pulverize it, it would be a strong Argument against my above Definition of its Use; but as it is seen always to pulverize the Earth, and to kill Plants when taken in any considerable Quantity, and not to nourish them, why should not the same Degree of Pulveration made by Tillage, and the same Exposure with no greater Exhaustion, keep the Ground from growing *weary* or *tired*, as well as if Part of that Pulveration were made by the ferment of those Salts? That Practice tells the contrary, I deny; because I have seen what I have advanced proved by long Practice, I have never affirmed that Part of the necessary Degree of Pulveration made by Tillage alone, without the Salts of Manure, will have the same Effect as the whole necessary Degree of Pulveration made by Tillage, and those Salts together will: neither have I said that Tillage alone can pulverize to that Degree in all Sorts of Land; for there are some Sands that have very little Earth in the Staple of them, and that little may require a greater Degree of Pulveration than can be obtained from the Plow alone, in a reasonable Time of Exposure. Pure Sand consists of very small Stones that are perfectly barren, when no Earth is amongst them, as the Sands of *Lybia* are: But when Sand is full of good Mould, 'tis by its Richness and Fertility the most profitable Soil that is; and the most likely to be sufficiently pulverized by Tillage alone.

Of what Sort the Sands of *Essex* and *Kent* are, I know not, nor perhaps *Equivocus* neither; yet he presumes to pronounce that should I affirm of those Sands the same Thing that I (and some modern Authors) have advanced concerning other Lands, as above, "the *Essex* and *Kentish* Men would think me (and that "with great Justice too) a *Man-Man*.]". But whether they will not (with greater Justice) think *Equivocus* a *Mad Man* for recommending the Manure he extols in his *Preface* to *June*, I leave to the Judgment of every Impartial Reader. 'Tis as follows, *viz.* He extracts it from one who in his Opinion is an exceeding good Author, asserting that Land may be "manured with *Malt* cheaper (sometimes) than with Dung, nor "does it Matter what Corn the Malt is made of; for by this means it is converted into the Substance of the "Wheat, together with the Benefit of the Multiplication: Neither is it material whether the Malt be ground "or not, especially for any Corn sown before Winter; because that is the Time the whole Grain will be dis-"solved and putrify'd, so as that by little and little it may be assimulated to the Nature of the Grain "you would improve, by *sweetening* (as we add) the *sour* and *unhealthy* Juices of that Land, and by gi-"ving it a new *sweet* Ferment (the Original of all vegetable Motion) it will produce admirable Effects on "that Corn on (or with which) it is sown."

Here, patient Reader, you have the *Theory* and *Practice* both of the (falsely intitled) *Practical Husbandman* and his exceeding good Author.

'Tis such a *Specimen* of profound Knowledge in practical Agriculture, and Skill in chusing the best speculative Authors, that I have not Patience to animadvert upon it; but it leaves no Doubt, whether the *Private Society* have made good their unparallel'd bragging Promise, that theirs should *be such a System as never appeared in the World before.*

Before

Before I conclude my *Notes* on this *Chapter* of the *Comparison* between the *two Sorts of Husbandry*, give an Answer to a very false and malicious Assertion of the *Equivocal Society*; tho' having already proved their notorious and wilful Want of Veracity in their pretended Description of my Farm, and in many other Particulars, I need take no Notice of any more of their Untruths (with which their Work so plentifully abounds,) but this one on which they lay the greatest Stress. 'Tis in *p.* 37. of their *Essay* for *July*, in these Words, *viz.* "The Proprietor himself, instead of raising one Estate by this and other new-invented "Pieces of Husbandry, has well-nigh spent two."

These *latent* Authors must be very much conceited of their own Penetration, if they pretend to know my Affairs better than I do: And if I know them, I have been so far from spending an Estate in any manner, that my Circumstances are now better than when I first set out in the World, notwithstanding many uncommon and inevitable Misfortunes of divers Kinds that have befa'n me, amongst which the Loss of Health obliging me to quit the Profession to which I was bred, and to travel for saving my Life may be reckoned.

As to Agriculture, 'twas not by Choice but a Sort of Necessity that I practised it; and I never kept an Acre in my Hands, that I could reasonably dispose of to a Tenant: I knew too much of the Inconveniency and Slavery attending the exorbitant Power of Husbandry-Servants and Labourers over their Masters, to propose to myself any other Gain by occupying of Land, but to repair the Injuries done it by bad Tenants, and to keep it, till I could *let* it at a reasonable Rent to such as I thought good ones.

I have occupied only two Farms, the first was in *Oxfordshire*: I so much improved that Farm in nine Years, as to *let* it for above a Third more Rent than it was ever *let* for before: and that being almost thirty Years ago, the Rent is not sunk yet, but likely always to continue or encrease. But the Lands of the Farm I have now, lie so remote from all Farmers, that they cannot be *let* without the House where I live, and which is situate in an Air, that I would not willingly Part with: To avoid this, and yet to be out of Trouble, as I was likely to be confined to my Bed, I prepared Materials for Building a new Farm House, and had in a Manner agreed with a Tenant to enter on my Farm the last Summer, which was disappointed by an Accident, and now perhaps I may be forced to keep it as long as I live: However that may happen, I am confident (all Things considered) that in the Time I have already occupied it, if I had managed it in the common Husbandry, the Value of its Purchase would have been lost by it; though a robust able-bodied Farmer in the Clovering and Turnep Method might have thrived upon it: But every *Virgilian* Farmer that has rented it (and here have been but few other, since it was first made into a Farm) that being about seventy Years ago, has either broke, or quitted it before the End of his Term.

'Tis to the new Husbandry, that I owe the Property of my Farm, and all that I here have said I can make appear to any Gentleman whose Curiosity shall induce him to enquire of me to find the Truth for his Satisfaction. My Estate is not so large as to leave an Overplus for acquiring another, after the Expences of maintaining me in the Manner I have been accustomed to live: I propose no more than to keep out of Debt, and leave my Estate behind me better than I found it; which, unless some new Accident prevents, I shall perform: whilst not only many Farmers in my Neighbourhood have broke, and several Gentlemen Farmers have lost their Estates larger than mine, and others more Money than all I have is worth, by the Old Husbandry, and by the many chargeable Superinductions, their Horses, Bailiffs, *&c.* incident thereto, within the Time I have been practising my Scheme, tho' generally the first Inventor of a Project is a Loser. But my Scheme diminishes the usual Expence so much, that one who understands it, can scarce be in Danger of losing by it: Yet owned it must be, that had I when I first began to make Trials, known as much of it as I do now, or as the diligent Reader of my *Essay* and this *Appendix* may, the Practice of it would have been more profitable to me.

But suppose I had worsted my Substance, are there not many who by Family Misfortunes or otherwise have lessened their Estates, though they have never practised Agriculture? Nor do I think any Gentleman ought to repine at the Smallness of his Estate, if (without his own Fault) it be reduced to his bare Share of the *Island*; which will be in Justice the less in Proportion as that possessed by his Ancestors has been greater and longer enjoy'd.

P. 131. L. 31. *That the first Tillers (or Plowers) of the Ground were Hogs.*] For this mere Supposition *Equivocus* in his *Essay* for *May* condemns me as an *Infidel* and an *Atheist*; affirming, that Agriculture (Heathen Agriculture he must mean, for that is it I treat of) "was not owing to any accidental Cause, such as the "*Delving* of Hogs" (as *Pruning* was said to be from the *Broxing* of an Ass) "For Tillage (he says) is of "Divine Institution, and nearly coeval with the World." But doth not pretend that the *Virgilian* was, lest he should contradict all those his pious Heathen Worthies, for whom he demands so much Honour and respect to be paid, they testifying that their Heathen Tillage was *invented*, and not *coeval* with the World, as appears by that of *Virgil*:

Prima Ceres ferro mortales vertere terram
Instituit; cum jam glandes atque arbuta sacra
Deficerent silvæ; & victum Dodona negaret.

"First *Ceres* taught the Ground with Grain to sow,
"And arm'd with Iron Shares the crooked Plough;
"When now *Dodonian* Oaks no more supply'd
"Their Mast, and Trees their Forest-fruit denied.

DRYDEN.

And that *Jupiter* made it necessary:

Ut varias usus meditando extunderet artes
Paulatim, & sulcis frumenti quæreret herbam.

"That thoughtful Toil might various Arts devise,
"Make Wheat from Grass in labour'd Furrows rise.

ANONYM.

Had

Had *Equivocus* resided in the Country, he might have seen Hogs (as mad Work as he thinks they would make in a Field) *Till* some Sorts of Land better than the *Virgilian Rasteing* in *Hampshire* and *Wilts*, which sometimes does not quite half-plough the Ground. And certainly a Hog is a better Tiller than an Ass is a Pruner. Why then is it not as likely that Heathen Tillage should be discovered from a Hog, as Pruning from an Ass?

If Tillage was inspired at first by the Author of all Things, in any other Manner than by making Man a rational Creature, then 'tis certain the *Mosaick* Tillage, if we know what that was, would appear to be different from the *Virgilian*, which is very imperfect; but whatever is the Work of miraculous Inspiration must be perfect: But whether the *Hebrew Verb* which is translated [to *Till*] be of the same Signification as 'tis in our *Western* Languages, may for what I know be a Question. It is undoubtedly true, that when God made Man he furnished him with every Thing necessary for his Subsistance; but Tillage, such as we mean, was not necessary for that Purpose before Mankind became numerous; for in some Countries People have subsisted without it several Thousand Years since the Creation of the World: Therefore, whether the Inference *Equivocus* draws from *Genesis* be right, I am not *Theologist* enough to determine, that being none of my Profession; neither would I in any Thing impugn the Meaning of *Holy Writ* knowingly.

I am now writing against Heathens, of whose Errors *Equivocus* is an Advocate; and by his Principles, seems to be of the worst Class of them, I mean a *Lucretian*; and therefore it might have been unfair to quote *Moses* against them or him, if it had not appeared in his *Essay*, that he had read *Genesis*; where in the *first* and *second Chapters* he may find himself condemned for an Infidel and an Atheist; not by a forced Construction, but by the plain indisputable Meaning of that *Scripture*, which is as full an Authority for the Creation of all Plants and their Seed, as of all Animals, and even for the Creation of the World itself; and this is what I think never hath been denied by any Body except by him, who hath said in his Heart there is no God: And whether *Equivocus* doth not deny it, when in Favour of *Equivocal* Generation, he affirms, that Plants are produced by a *fortuitous* Concourse of Particles or *Atoms*, without *real corporeal* Seed, is left to the Judgment of every Reader, except of the lower Class. 'Tis also remarkable how angry *Equivocus* is with those who oppose his *Lucretian* Doctrine, when he in his *Numb.* vi. *p.* 3. not only quotes *Virgil* against antient and modern *Theology*, but also in *p.* 44, 45. of his *Essay* for *May*, complains in the following Manner, that "the great and unreasonable Cavils that are by several pious and well-meaning Men brought against "that Passage of *Virgil*, in which he gives an Account of the *spontaneous* Production of Plants, are very "well known to all that are conversant in the Writings of the best *Theologists*, who argue, that such an "Assertion would introduce an equivocal or spontaneous Production of Plants, which would be equal to "Creation itself; and that Creation being the Work of Omnipotence is not communicable to any Creature "(much less to dull Earth) and that it must be beyond the Power of natural Agents to produce Things after "that Manner; for Creation, say they, seems to be not only the Production of a Thing out of nothing, "but also out of indisposed Matter, than which nothing, according to the Opinion of these learned Sages, "can be more absurd."

Since *Equivocus* will thus upbraid pious learned Sages, and the best *Theologists* as unreasonable Cavillers, for opposing his own *Atheistical* Principles, he is an unfit Judge to condemn others of them.

But here I must own that I think *Equivocus*, in order to countenance his Atheistical Opinion with the Authority of the Prince of Heathen Poets, hath much misrepresented *Virgil*'s Meaning in that Passage, *viz. Virg. Georg.* ii.

Principio arboribus varia est natura creandi.
Namque aliæ, nul'is hominum cogentibus, ipsæ
Sponte sua veniunt, camposque & flumina late
Curvis tenent; ut molle siler, lentæque genistæ,
Populus & glauca canentia fronde salicta.

What Pretence can be taken from this Passage to infer, that *Virgil* believed the *Equivocal* Generation of Plants? He says no more than what we all see, *viz.* that some Plants grow without our planting or sowing them. And nothing more is expressed by *Sponte sua veniunt, nullis hominum cogentibus.*

P. 132. L. 24. *She* [Ceres] *as they pretend, first taught the Art of Tillage.*] This *Equivocus* in *p.* 3. of his *Essay* for *May*, denies endeavouring to pervert even the *Mythology* of *Virgil*, whose Errors he pretends so strenuously to defend. But to convince *Equivocus* of this Blunder, I will quote him the ingenious Commentator and Translator he commends, and has had the Presumption to name so often in his *System* (nobody can suppose with his Consent.) That *Anonymous* Critick in his *Notes* upon Mr. *Dryden*'s Translation of *Virgil*'s first *Georgic*, blames Mr. *Dryden* for this *Line*, *viz.*

Himself [Jupiter] *invented first the shining Share.*

"'Tis strange (says this Commentator) Mr. *Dryden* should make so great a Mistake as this, when a "few Lines following he says,

First Ceres *taught, &c.*

"What *Virgil* means here he explains more fully afterwards,

---------- *Primusque per artem*
Movit agros ----------

"signifies he [*Jupiter*] made it necessary to *stir* the Ground, because he filled it with Weeds, and obliged "Men to find out Ways to destroy them. *Ceres* helped them to the Plough out of Compassion."

Therefore *Jupiter* was not the Inventor of Tillage, but *Ceres* only.

P. 132. L. 51. *Fall as a Sacrifice to her* [Ceres's] *Altar, as the Porca Præcidanea did amongst the Romans.*] Here *Equivocus* in *p.* 5. of the same *Essay* urges another of his false and ridiculous Arguments, *viz.* "That Hogs were held in Abomination, and forbid to be offered up in Sacrifices, or even to be eat at the "private Tables of the Heathens, and therefore could not be looked upon as the Authors or Inventors of "any publick Good, *&c.*

But

But to convict *Equivocus* justly of Falshood, I need produce none but his own Witnesses, nor to quote any other Author against him, but such as he himself quotes and extols. His *honoured respected Varro*, that antient *Heathen Worthy* in *Fol.* 82. *a. Lib.* ii. *de Re Rust.* hath these Words, *viz.*

Hic enim [Verres] *conciliator suillæ carnis datus populo. Sus Græce dicitur ὑς, olim Thyestes dictus, ab illo verbo quod dicunt θύειν, quod est immolare. Ab suillo enim genere pecoris immolandi initium primum sumptum videtur, cujus vestigia, quod initiis Cereris porci immolantur, & quod initiis pacis fœdus cum feritur, porcus occiditur, & quod nuptiarum initio antiqui regis ac sublimes viri in Hetruria in conjunctione nuptiali nova nupta, & novus maritus primum porcum immolant. Prisci quoque Latini & etiam Græci in Italia idem factitasse videntur, &c.*

I forbear to translate this left I should be blamed for forestalling the Person, who *Equivocus* intimates is translating into *English* all the Books of the four Worthies, which will shew the lower Class of Readers how falsely *Equivocus* has represented those Authors; and if he has read the very Author he is defending, his Falshood will be as wilful and notorious as that is where he describes my Farm.

So far were Hogs from being forbidden to be offered in Sacrifice that they were the first Occasion of *Roman* and *Grecian* Sacrifices.

Now for Hog's Flesh being eaten at their Tables, there neither is nor ever was any Country where it was more esteemed, or had more *in Deliciis* than in *Italy* and *Greece*, the Flitches, the Gammons, the Sauciges, and every Part was eaten at the best Tables, and the breeding, fattening, salting and curing their Gammons, *&c.* have a great Share in the Works of *Cato*, *Varro*, *Paladius* and *Columella*; and *Varro* in particular, *p.* 82 *b.* says, *Suillum pecus donatum ab natura ad epulandum.* Hogs were likewise so far from being held in Abomination by them, that there were *Porci Sacri* [Holy Hogs] held in Veneration.

If *Equivocus* had passed the middle Class of a great School, and got as much Learning there as the half-bred Scholars, whom he so much despises in his Advertisement to his *first Volume*, he might have read *Homer*, who would have informed him to the contrary of what he pretends concerning the Heathens holding Swine in Abomination, when they held them sacred in solemnizing of Leagues, by offering them in Sacrifice. And if Hogs Flesh had not been usually eaten at the noblest Tables, *Achilles* would scarcely have entertained the Ambassador of *Agamemnon* with it; but perhaps *Equivocus* may not be so ignorant as he seems to be, for he cites *Homer* for proof, that Dung was used upon Land by a *Greek*, which seems to intimate that he has read *Homer*, or at least would be thought to have read him; but if he has read either him, or the four Roman Authors he pretends to be so well acquainted with, it is not Reasonable to suppose, that he misrepresents them *ignorantly*; no, *Equivocus* has such an habitual Contempt for Truth, that he seems to think the innumerable Falshoods he utters might fail of meriting the Glory he expects from them, unless they appear to the World to have been *knowingly* and *wilfully* propogated by him.

But if this had been as *Equivocus* asserts, it would have made nothing for his Purpose, *viz.* to shew it impossible that Hogs might give the Antient Heathens the first Hints of Tillage; it would only argue (and *Equivocus*) infers no more from his invented *Falshood*, than that they did not attribute the Invention of Tillage to Hogs; but says in his before-quoted *Essay* for *May*, *p.* 9. "That they ignorantly believed that *Ceres* was the "first *Inventrix* of Corn and Tillage." This is the Injustice I have charged them with, in the Line next before this Note, *viz.*

They were very unjust to give the Reputation of Inventrix of Tillage to Ceres, *&c.* To support this Conjecture of mine about the Delving of Hogs, &c. against the unreasonable Cavils of *Equivocus*, I will cite him a Passage in his (ignorantly) admired *Palladius*, which makes it less improbable than he perhaps may imagine; the Passage is this, in *Pall. de re rust. p.* 80.

In porcis etiam id est commodum, quod immissi vineis necdum turgentibus, vel exacta vindemia gramine persecuto diligentiam Fossoris imitantur.

I leave it to be determined by the Reader whether of the two is most likely, that a Hog should first imitate a Man, or a Man a Hog in *Digging*: Since none but such an Infidel as *Equivocus* will deny that Hogs were Diggers before Men: For that would contradict *Moses* in describing the Creation, wherein Brutes had the Priority.

But it seems that a Man may be of worse Principles than either an Infidel or an Atheist; he may be the latter for want of Reason (if such may be termed a Man); he may be the former for want of Information; but an *Hypocrite* offends wilfully, and is without Excuse.

Whether *Equivocus* be not guilty of this, may be seen in his *Introd.* to *Apr. p.* xciv, xcv, xcvi. where he pretends in an extraordinary manner to recommend Peace and Christian Amity, and to eschew Wrangling, whilst he is writing a malicious Libel in Defiance of Truth, with Intent to murder his Neighbour's Reputation, whom he doth not so much as charge with having offended him, or proved to have offended any other Person.

P. 133. L. 12. *Turns it* (the *Furrow*) *to the Left.*] *Note*, This *Eastern* Plow always goes forward, and returns back in the same Furrow, making only one Land of a whole Field; though it turns its one Furrow towards the Right, and the other towards the Left of the Holder, yet every Furrow is turned towards the same Point of the Compass as when we Plow with a *Turn-wrist* Plow.

P. 136. L. 49. *A sward'y Furrow cut off by only one Coulter, &c.*] And for killing the Turff of such Land is the chief Use of the *four-coultered* Plow: For doing of which there is this Advantage, that as in a whole Furrow there are often Strings of Couch-Grass, three or four Foot long; but when cut by this Plow there is scarce a String left of one Foot long: And these Strings being apt to send out Roots from every Knot or Joint, the sooner they are cut, the more they will be exposed to the Air and Sun, which will kill them the sooner.

P. 138. L. 39. *When this is done, and the Rules put into a Method, &c.*] This is a Task I have neither Time nor Encouragement to perform in Models: My Expence in Cuts has been too great, and that of Models might be much greater.

P. 141. L. 40. *The Fin of the Share will rise up and cut the Furrow diagonally, leaving it half unplowed.*] This is the greatest Misfortune incident to a common Two-wheeled Plow, and happens generally by the Fault of the Maker, though sometimes by the Plowman's setting it so that the Point of the Share turns too much to the Left. I have seen Land plow'd in this Manner, where not half of it has been moved, nor better tilled than by *Raftering*, not only cut diagonally, but also half the Surface hath remained *whole*, where when the Earth that was thrown on it was removed, the Weeds appeared unhurt on the unplow'd Surface.

In

In this Case, they for a Remedy set the Plow to go deeper, and then, if it go deep enough for the Fin to cut off the Furrow at a just Depth, the Point will go below the *Staple*, which may ruin the Soil unless it be very deep.

When our *English* Plows go in this Manner, they make much worse Work than the Eastern Plows, that have no Coulter; for these, contrary to ours, though they always cut their Furrow diagonally, cut it thin on that Side from which it is turned, as our bad Plows leave it *thin* on that Side towards which it is turned. The Earth the Easterns leave by their Diagonal in one Furrow, is taken off by the next; but ours leaving Part of their Furrow behind them, on the Side next to the plow'd Part of the Field, come at it no more; but the other can plow cleaner, their Diagonal being contrary to ours, which leaves the Trench deepest on the Side next to the unplow'd Part of the Field, but unless the Fin of the four-coultered Plow go parallel to the Surface of the Earth, it will not plow at all; or will leave two or three of its four Furrows untouched.

P. 143. L. 49. *To be about two Inches and a Half further to the Left than the Point of the Share, &c.*] I find that some Times it is necessary in some of these Plows for the Point of this Coulter to stand yet farther on the Left of the Share's Point.

P. 148. L. 2. *The Area's of both being true Planes.*] Take Care that these opposite Sides be sure to be true Planes, especially all that Part of their *Area's* that is before the *Transverse Axis* of their *Ellipses* herein after described; for should they be otherwise, the *Bevel* of the Mortaise would be spoiled, and so would the *Ellipses* and the *Acute Triangles* on the Sides of the Tongue, which how necessary they are to be true, is shewn in the proper Place. Workmen are very apt to fail in this, when they *File* by Hand, and make these Sides of the Mortaise *Convex* instead of *Plane*; therefore this might be done with less Difficulty and more Exactness with a File placed in a Frame, whereby it might move upon a true *Level* without rising or sinking of either End.

P. 151. L. 38. *Of a Shilling.*] Not quite so thick as a milled Shilling, but rather of an old broad Stampt Shilling, which is a little thinner.

P. 156. L. 14. *But we do not always use this inner Cylinder.*] For instead of this we may use a Bit of Woollen Cloath of the Breadth of the Mortaise, glued on to the Bottom of the Hopper, which filling the Vacuity above the Steel Tongue, prevents any Seed from running over it, though the Holes are bored as low in the Mortaise as if the Cylinder Fig. 7. were to be used.

P. 156. L. 20. *The Bottom of a Notch is made in different Forms.*] The Convex Form is best for turning out a great Proportion of Seed; because such a Bottom may be broader than one of any other Form, in a Notch of the same Depth and Capacity, and such a Notch having its Capacity more in Breadth than Depth, will be less liable to let fall any Seed without the Turning of the Wheels, than a Notch that is deeper and narrower, except it be very narrow, which it cannot be for throwing out a large Proportion of Seed; for a great Number of Notches cannot have altogether the same Capacity as a lesser Number of the same Depth may: The Concave Notch, if it were as broad as the Convex may be, would make the Interstice, that is before it, liable to be broken out, and so two Notches would become One; but the Convexity of the Other supports the Interstice like an Arch, and for that Reason may be made to reach almost quite to the Notch that is before it without that Danger

P. 156. L. 29. *Intervals between Notch and Notch must be equal.*] But these cannot be equal unless the Notches are all of equal Breadth, and equidistant from one another, and if they are otherwise, the Seed will not be equally delivered to the Ground.

P. 159. L. 23. *This Spindle being but Half an Inch Diameter, &c.*] I believe if it were less by a Fourth or Third of its Diameter it might be better, as being more proportionable to the Smallness of the Turnep Seed, I have had the Mortaise much wider; but it cannot well be made much narrower, whilst the Tongue is of this Fashion: for this Steel Tongue, if narrower, would either be too stiff, or else apt to break, nor would there be room in the Mortaise for a sufficient setting Screw to follow it. But there is another Fashion wherein a narrower Brass Tongue has a broad Spring behind it; and when it is in this Manner, the Mortaise may be a Fourth of the Breadth of this. I have had many of these when I made my Boxes in Wood: but cannot describe them by these *Cuts*, neither are such narrow Mortaises necessary, unless it were for drilling Tobacco-Seed, Thyme-Seed, or some other Seed of an extraordinary Smallness.

P. 164. L. 35. *We can have but one Set of Notches in it.*] But by putting on a *Wreath* (that is a little broader than the Mortaise) upon the Spindle (made longer for that Purpose) we can, by changing this *Wreath* from one End of the Spindle to the other, have *two* Sets of Notches of different Sizes, and of different Numbers in it: Or if we would have three Sets, we need only make use of two such *Wreaths*, and let the Spindle be long enough to receive them. So we may use which Set we please.

Though several Sets of Notches may be useful to them who drill many Sorts of *fine* Seeds different in Magnitude in a very great Degree, yet I never found more than one Set of Notches necessary in this Spindle.

Nor have I used any more than one Set of Notches in one Mortaise of any Sort; but in a *wide* Mortaise there may be made a double Set of Notches, consisting of two Rows, all of equal Bigness and half of the Length, and double the Number of a single Row, one End of each Notch reaching to the Middle of the Mortaise, and pointing against the End of an Interstice that is between two of its opposite Notches.

If ever there shall be occasion for this Sort of Notches, it must be when a great Proportion of Seed is to be drilled by a small Spindle and low Wheels, the Smallness of the Spindle may not, by a single Set, admit of a sufficient Number of Notches (of a proper Bigness) in its Circumference; not that a double Set, by its double Number, will throw down a greater Quantity of Seed than a single Set of the same Width and Depth, but a less Quantity: But it may be feared that a very small Number of Notches might not spread the Seed so much as to cause it to lie *even* in the Channels, one Notchful falling all to the Ground, before any of the next Notchful reaches it, which would make *Chasms* or Gaps in the Row of Corn or Legumes: This, such a double Number of Notches will certainly prevent.

It would seem that the higher the Wheels, the more need there should be for this double Set of Notches: but it appears to be otherwise; for the greater Distance the Seed has to fall, the more it spreads, and strikes oftner against the *Funnel* and *Trunk*, and by that Means a Notch from high Wheels will, with the same Quantity of Seed, supply a greater Length of the Channel (or Furrow) than a Notch will from low Wheels.

In

In all my Practice I have never had any occasion for such a double Set of Notches, either with high or low Wheels, or even when I drilled into open Channels, without *Funnels* or *Trunks* to my Drill-plow; and yet my Rows of *St. Foin* and of Corn were always free from Gaps, being equally supply'd with Seed from one End to the other.

If ever there is occasion for more than a single Set, it must be for Beans, for which also I think a large Spindle is better than a double Set of Notches in a small One; the largest Spindle I have known made, is of two Inches and a half Diameter, and that only for Horse-Beans.

The best Sort of Notches for a double Set, are those which have convex Bottoms; because such are less liable to drop their Seeds without the turning of the Wheels than any other Sort: And a double Set must be in greater Danger of this, as the Tongue is always hindred from pressing so closely against any Notch, being held open by the Seeds on the opposite Interstice, which is contrary to a single Set, where no Seed can lodge at either End of a Notch, to hold open the Tongue, or hinder its pressing against it.

Note, when I made my Boxes of *Wood*, I had double Boxes, with a Partition between such a double Set of Notches, but never made such in Brass, not knowing whether that Partition, by its Thinness, of hard Metal, might not cut the Spindle, yet I never found any occasion for a double Row of Notches. I made those double Boxes only for drilling two Sorts of Seeds at once into the same Channel.

P. 167. L. 11. *Thickness of the Sheat is an Inch.*] This Thickness must be only at the upper Part near the *Tenon*, for strengthening it where the Sheat is narrowest, and where the most Strength is required; All the rest of the Sheat should be no thicker than the Breadth of the Share.

P. 180. L. 42. *Unless the Wheels were of an extraordinary Height, &c.*] Notwithstanding the Reasons given, and that I have never used Wheels of such an Height as might be necessary for going in the Furrows, yet it may not be amiss to try such, because with them the Spindle needeth not to be more than half the Length of one that is carried by low Wheels: And high Wheels will allow the Funnel to be much larger, so that although the Spindle go higher from it, no Seeds will drop besides a large Funnel, but there is not room for a large One under low Wheels.

I did not think it necessary to describe the Manner of making Drill-Wheels any other Way than by shewing them in the *Plates*; but I will observe here that they are to be made very light: One of mine that is 30 Inches high weighs five Pound and a Half, it has a Circle or Ring of Iron whose Depth is Half an Inch, and its Thickness a Quarter of an Inch, also very thin Iron Stock-bands to hold the *Nave* or *Stock* from Splitting. The Circle is held on the Spokes by small flat Iron Pins on each Side: and each Spoke has a Ring of Iron to secure its End from being split by driving in of the Pins. We also make the Drill-Wheels less Concave than other Wheels are.

P. 188. L. 44. *Reaches almost as far forwards as the End of the Axis of the Tongue, &c.*] Commonly it reaches within Half a Quarter of an Inch, but if it should only reach within a Quarter of an Inch of them, it would not have that ill Consequence of that Distance, as the same Position would have in the large Seed-Boxes; for in them the Seed would in such Case, be apt to bear against the Bottom of the Hopper, and obstruct the Motion of the Brass Tongue, which small Seeds cannot do in the Turnep-Seed-Box.

Having in the foregoing Notes *given my Readers some of the many Explanations and Inlargements which I intended to make to my* Essay, *I proceed with a few* Notes *on my* Preface.

PREFACE, P. i. L. 4. *Reasonable to expect that an Apology will be required for Writing, &c.*] For the *Equivocal Society* to charge me with audacious *Brags* and Pretensions to *Infallibility* is very vile; and the Reader will see that the Contrary to their Accusation is true. But if he reads the Society's two *Volumes*, he will see more of that kind, than is to be found, I believe, in any Author, some of which I beg Leave here to insert, *viz.* in *p.* iii. *of their* Dedication *of their first Volume*, they say of their *Treatise*, That 'tis "one of "the compleatest *Systems* of *Agriculture*, that was ever yet published." In *Preface* to *April*, "Has already "*obliged* the World with some *Scraps*." *P.* vi. "A compleat *Set* or *System* of Agriculture; and being entirely "*new* and deduced from *Practice*, will be of great Use to the Publick." In *Introduction* to *April*, "Shall "publish something more to the Purpose on Husbandry and Planting, *than has yet been done, and from which* "*('tis to be hop'd) a more compleat* System *of these* Sciences *may in a little Time be formed, than has yet ap-* "*peared in the World.*" In *Pref. to May p.* i, ii. *The* Authors *upon a serious and impartial View of all that* "*has ever yet appeared, and well knowing their own* Integrity and Designs, are not in the least intimidated "from offering the following Papers, 'till a general System is finished: not doubting but that the World (tho' "tired as it were with that numerous Pest of Books with which the Press has been long crouded) will "yet do Justice to this or any other Undertaking, which in so visible a Manner appears to be calculat-"ed for the Publick Good, and wrote in a much more useful, as well as more agreeable *Style* and *Method*, "than has yet appeared, *&c.*" In *p.* iii. *of the same Preface*, "The Authors living much more in the "Country than in Town, being of Consequence much better able to judge of the Ignorance of all Country "Farmers *&c.*" In *p.* iv. And from the Knowledge of us, who are the Authors of these Memoirs, we can "affirm, that the major Part of the Farmers of this Kingdom, and we can almost say Gentlemen too, "know little or nothing, *&c.*". In *Essay for May p.* 137. "And though Mr. *Miller* hath gone a great Way, "the Reader will find more for his Instruction in this, than in any other Book yet extant." In *Dedication to Vol.* II. "The Authors free from all sordid servile Views think themselves very happy, *&c.*" In *Preface to July, p.* iii. "Wherein not only the Practice but the Theory also of those useful Sciences will be set in a "stronger and more conspicuous Light, then they have ever heretofore been, *&c.*" Much more of this Sort of Brags, Arrogance, and Presumption may be found in the Work of those Authors.

P. i. L. 11. *The Solicitations by Letters from Persons of Rank, &c.*] *Equivocus* insinuates that I writ to shew myself a *Great Man* and a *fine Gentleman* by the *Conceitedness* of my own *Opinions*, and the like, which he would have the World believe the only Motives of my Writing.

Of the many Persons that persuaded me to write, the *Commentator* and *Translator* of *Virgil's Georgics* was the first, who both by Word and a great Number of Letters, which I have, and by other Inducements which I don't care to mention, *solicited* me to put my Thoughts upon Husbandry, *&c.* into *Writing*; he often telling me, that he knew nothing in the World that would be of more general Use than my *Drill*, *&c.* if made publick, there never having been any other of the kind that would perform that *Work* to any Purpose, as he believed, and he had read all the Books he could obtain likely to discover them, if there had been any such Instruments: He said the *Sembrador* was the nearest; but of a Structure very different from my Drill, and upon full Trials was found useless for planting in Rows, it being only designed for planting Corn *deep* in Land that was *level*, and so *fine* that neither Clods nor Stones remained in it. He shewed me the *Cut* of Mr. *Worledge's* Drill, which he said was only a Proposal, and never made but in the *Cut*. He also told me that he himself had been endeavouring to get such an Instrument made, and had employ'd a worthy Reverend Projector, who put him to an Expence of 25*l.* in making one for him, which when finished would perform Nothing.

He afterwards desired that my Workmen might make him a drill of my Sort for *St. Foin*, and another for *Turnep-Seed*, which was done; and then he advised me to make that Part of Metal, that was before of Box-tree Wood, and is in my Plates described as made of Brass.

'Tis to that ingenious *Antidrydenian* Critick, that I chiefly owe my Misfortunes of the Press, which have been more and greater than I believe ever happen'd to any Author on the same Subject.

Perhaps you'll say, I might have avoided these Misfortunes by suppressing what I had writ; and, indeed, after the *Specimen* was published, I was come to a Resolution of printing no more, for several Reasons; the Chief of which was my Apprehension of the Mischief that would be done by Pretenders, who were setting up in *London*; and that, when I heard my *Specimen* was *reprinted* in *Ireland*, I expected the whole Book would be so too: But I was prevailed on to change my Design by several Letters, one of which I here make bold to Insert, hoping the Noble Peer who wrote them will not take it amiss, since it is to obviate an Objection injurious to the Design of the same Letter; which is as follows:

London, Feb. 8. 1732.

My Dear Sir,

"****** *shewed me your Letter to him of the* 3*d of this Month. I am extremely sorry to observe from it,* "*that you are under great Discouragements at present. I hope you'll believe I am very sincere, when I tell you I* "*am much interested in your Preservation, from the Happiness I have of a Personal Acquaintance with you,* "*as well as from the Concern, I think the Publick has in a Person who has laboured so successfully for its Ser-* "*vice. I would fain hope, that the Apprehensions you had from your spitting of Blood are long before this* "*Time removed, by its having ceased. If that's the Case, I must conjure you for the sake of your own Glory,* "*and for that of your Country's Benefit to apply heartily and without Loss of Time, to the publishing of your* "*Work. If you cannot get an Amanuensis from* Oxon *speedily, pray let* ***** *send you one from hence. I am per-* "*suaded the Subscription Money will go far towards printing your Book; but if any Thing should be wanting you*

"*may*

"*may be assured that your Friends here will contribute towards having a Work so beneficial communicated to the* "*Country, and in a Way that the Profit arising from the Sale of your Books shall return to yourself. The Hard-*"*ship that has happen'd you from the reprinting your Book at* Dublin *might easily have been prevented, if we* "*had foreseen that the Thing was to have happened; but now that we are aware of that Inconvenience, you* "*may depend upon it, your Friends will either get a Stop put to the Printing from hence, or, by the Means of* "*the Authority of my Lord Lieutenant of* Ireland.

I am ever, with great Esteem,

My Dear Sir,

Yours, *&c.*

* * *

Glory is the Reward of Warriors attain'd in the Field of Battle; but in our Arable Fields, the Master of them must be a Slave to those People who are under the greatest Obligations to serve *Him*; and Slavery is opposite to Victory. Indeed Glory will belong to the Legislature, when it shall please to deliver Masters from that Slavery, which is so injurious to the Publick, and beneficial to no honest Person: 'Till which happy Time we may say with the Poet,

Non ullus aratro
Dignus honos - - -

For my Part, I pretend to no other Merit, but my Endeavours to answer the Desires of my Friends, whose Expectations, I am perswaded, were as reasonable as their Promises were sincere, of which I am now able to make no better Return, than by my Acknowledgments and this *Supplement*.

If they had not believed the Performance of those Promises feasible, they would not have made them.

When I was honoured with those Letters, I was (in all Appearance) going out of the World, and far from having an Ambition of acquiring any Reputation, except that which no body who regards Truth can take from me, *viz.* that of being *Sincere*; and for being so in too great a Degree through the whole Course of my Life, my Friends have often reproved me, as 'tis a Bar to most worldly Acquisitions, (though I should not have had other Impediments,) and since this is rather looked on by the Polite as a Disgrace, I have no Apprehension of drawing Envy upon me, but Contempt on that Account.

I likewise here insert one of the Letters I received from *Ireland*; 'twas from a Member of Parliament there. I only set the Initial Letters of his Name.

Dublin, March 4. 1731.

SIR,

"*THERE is just now a Society formed of near two hundred of the chief Gentlemen of the Kingdom for the* "*Improvement of Husbandry and Manufactures; but principally the first, in order to introduce the best* "*Method of Tillage and improving Land; and as you have been so great a Benefactor to the Publick by the* "Specimen *you have Published, one of which I had from you last* June, *when I went to wait on you, and at* "*the same Time so obliging to walk and shew me the Proof of your Method, which, as well as I could remember,* "*I related to the Society, and had several of your* Specimen's *Reprinted here, which has raised a Desire in e-* "*very Body that reads it, to see the Treatise at large, with the several Plans of the Tools; this alone will* "*not be sufficient without a Person be sent over that will shew the Use of them, who would meet with due En-* "*couragement. I am now desired by this Society to write to you, to have your Consent to enter your Name a-* "*mongst us; and to beg the Favour of your Assistance, to communicate your Thoughts on the Subject we are en-* "*gag'd in. The Earl of* Halifax *has done us this Favour. The chief Benefit proposed, is to promote your good* "*Work among all the Farmers of this Kingdom which is by Nature very well adapted to all Kinds of Tillage,* "*having all Kinds of Soils you have in* England, *except the Chalk, of which here is none. You had a* "*Servant when I was last to wait on you, that did understand your Method of Tillage: If you can spare him,* "*which I understood by you, would be convenient about this Time, he shall have what Wages you think* "*he deserves; and he may at the same Time bring over with him an entire Set of Tools. I desire the* "*Favour of your Answer as soon as possible, directed to me at the Parliament House here, and You will much* "*oblige*

Sir,

Your most Obedient Humble Servant,

G. M.

In Answer, I returned my Thanks for the Offer, and the Reasons why I could not accept of it. And that there was not a Conveniency of sending the Engines from hence; neither would the *Man* venture his Health in *Ireland*.

At length overcome by the Importunities of Noblemen and Gentlemen of *South* and *North Britain*, as well as of *Ireland*, I unwillingly printed and published my humble *Essay*, against which the *Secret Society* have exerted the utmost Stretch of their dirty Wit and Invective; but it happens, their Wit is so much inferior to their Malice, that the Sting of their Satire (they designed against me) points only against themselves; particularly their *Witticisms* in their scurrilous *Preface* to *Aug. p.* xxxiii. *&c.*

I know nothing that could have induced Noblemen and Gentlemen to desire a thing so unreasonable of a Person in my Circumstances, as to become an Author, except the Reasons given in their Letters, *viz.* That upon their Ocular Inspection of my Husbandry, they were convinced it would be of general Use, if publickly known and described, which on Account of the Newness of it, and of the Instruments with which it was performed, they judged was impossible to be described by any other than myself.

From all this it may appear, that if mountainous Expectations have been raised, it was by others; and if they had produced only a *Mouse* (as *Equivocus* would have it) I should not have been answerable for such a Production's being disproportionable to those Expectations, unless I had fallen short of what I promised in my *Proposals* or the *Title* of my *Essay*, as to both which I hope I may be justify'd, if such Allowances

ances be made, as every candid Reader makes to the Inadvertencies that sometimes happen to the Pen of a Person in Pain; because he cannot write but in a Hurry.

The following are all the Articles of my Proposals relating to the Account of the Work, *viz.*

I. *In treating of* Roots *'tis proved, that they extend horizontally to a much greater Distance from the Stem, than it is commonly thought; and that they are in this, and in all other respects, by nature adapted to receive the Benefits of the* Horse-hoing Husbandry.

II. *The Natural and Artificial Pasture of* Plants *are described.*

III. *'Tis shewn how this Artificial Pasture is raised by* Dung, *and by* Tillage, *and what Difference there is between the one and the other means of raising it.*

IV. *That deep and proper* Hoing *is a Sort of* Tillage *that can supply the Use of* Dung; *and that 'tis for want of this* Tillage, *that few* Plants *are brought to their full Perfection.*

V. *The Rules for putting this* Husbandry *into Practice are shewn, as far as the Author's Experience reacheth.*

VI. *All the particular* Instruments, *necessary for that Purpose, are described in Cuts by the Inventor, with Directions how to make and use them.*

Had I failed of Performance in any of these Articles, though no Body else had taken Notice of it, *Equivocus* would have been sure to upbraid me with it; and for what I have done more than my Proposals required on the Subject, I hope my Readers will not accuse me of Breach of Promise, for having exceeded it.

But as far as the Sincerity of Persons of Honour and Learning will go, and I hope that cannot be doubted, abating for some Compliments of the *Polite*, my *Essay* has their Approbation; at least the Contrary hath not come to my Knowledge.

Of many Letters I have received of the same Purport, I will here insert one, that I would not have mentioned upon any other Account than to shew that *Equivocus* imposes a Falshood upon the Publick. The Letter is from a Noble *Peer*, since deceased, who having had much Experience of *Drilling*, and practised it, as I have heard, upon Hundreds or rather Thousands of Acres, beginning it for Wheat, against my Advice, almost as early as myself, had seen (by listning too much to his Agents and Servants) most of the Errors in the Practice; which (as I have been informed) were more than I could have imagined possible to be committed, tho' sometimes they did well; the different Experience of Right and Wrong had enabled his Lordship to form a juster Judgment of the Scheme in general, than any other could. The Letter here follows:

September 19, 1733.

SIR,

"*I Have the Pleasure to be studying your Book; I have three of them, which Mr.* *** *shall account* "*with you for: But I think there is a great Deal due (besides the Price) for so great a Treasure. My* "*own Thanks, as well as those of all* England, *will yet be too little, for what much better Judges than* "*myself esteem as the finest Piece of Natural* Philosophy *that ever was wrote, besides the Addition of Your* "*own Experience and most admirable Invention.*

"*The more I read, the more I am convinced, that there is no other Way of raising Wheat to any Advantage* "*(or without Loss) but by the Drill and the Hoe-Plow. - - - I am now strongly resolved to do what I have* "*been too careless of.*

Dear Sir,

Your, *&c.* * *

I am informed, that the *Dublin* Society, mentioned in the inserted *Letter* from *Ireland*, consisting of Lords Spiritual and Temporal, and Gentlemen of the first Ranks, are such a Body, that for Learning and other Qualifications was never equalled by any Society formed for the Improvement of Agriculture in any Part of the World.

My *Essay* has the Approbation of that Honourable Society, as appears on the *Title Page* of the Copies reprinted by their Order and published in *Dublin*.

From the *best* Judges, I beg Leave to descend to the *Worst*, in order to confront my Enemies the *Equivocal* Society, with their *own* Approbation of the Essay they are hired to vilify and defame.

See the *Practical Husbandman* and *Planter*, *p.* iv. of *Preface* to *Aug.* "We are very far from animadvert-"ing upon (much less censuring) every thing which that voluble Author of *Horse-Hoing* has advanced on "the Subject of Husbandry and Planting; having on the contrary made Use of his Arguments and Autho-"rity, wherever we have found them agreeable to Reason and Experience; and in particular (as is to be "found in the *Preface* to the last *Monthly Essay*) have quoted a good deal from him on the *Vegetable Pa-"lates* or *Tastes* of *Plants*, which the late Mr. *Bradley* and several other *Virtuoso*'s have for several Years "last past entertained the World with, it being, *&c.*" Here they spend several Pages in transcribing from my xvith *Chapter*. In *p.* 10. of their *Preface to July*, they intimate, that a late voluble Author *Jethro Tull*, Esq: confuted an Error of Mr. *Bradley* and Dr. *Woodward*, both of them F. R. S. and of the *French* Author of *Spectacle de la Nature*. In *p.* xii. of the same *Preface*, my *Antagonists* own they are obliged to conclude with the Author of the *Horse-Hoing Husbandry*, *&c.* quoting my *Essay*. In *p.* 25. of their *Essay* for *July* they have these Words: "And here indeed the voluble Author of the *Horse-Hoing Husbandry* has in all Pro-"bability got the Advantage of these two Gentlemen [Mr. *Bradley* and Dr. *Woodward*] since as he argues "with great Probability of Truth, *&c.*" They here proceed to quote my Authority in another material Point in Theory.

In many Places of their *Treatise*, they commend the Practice of *Drilling* and *Hoing*, particularly in *Essay* for *April*, *p.* 32. and in *p.* 77. they say, "The *New Invention* of *Drilling* is of *great Use*, *&c.*" And the Reason they give for it is, "That Weeds may be better hoed out, and the Land kept cleaner from Weeds "between Rows, than among that which is sown on a *Broad Cast*." In *p.* 80. of *Essay* for *April*, they talk of Turneps being generally *drilled in by the Drill-plow*; and ask, why the Roots of *Luserne* may not be hoed and set at equal Distances as well as Turneps? In *Essay* for *May*, *p.* 145. "And this [*Drilling*] is "indeed the best Practice that hath been used, provided you can get the *Instruments* proper for *Drilling* and

"*Horse-*

" *Horse-Hoing.*" In *p.* 149. *of the same Essay*, " Mr. *Tull's Horse-hoe Plow* does the Work very expeditiously." In *Essay* for *July*, *p.* 134. " But if the Farmer would *drill* in his *Wheat* by a Plow made for that Purpose, " one Bushel [to an Acre] will be sufficient, it being a Truth, even beyond a Peradventure, that Wheat espe- " cially on good Land is generally sow'd too thick."

In *Preface* to *September*, they insert the following Letter from a Gentleman, Part whereof I have extracted.

B——— Essex, July 12. 1732.

Mr. *Switzer*,

" IN Answer to your's concerning the Planting or Setting of Corn, with proper Instruments, and for in- " troducing a kind of *Vineyard-Culture* into our Fields, I acquaint you, that I have made diligent Search " amongst antient Authors, but can't find any thing, which seems to point that Way, although it must " be acknowledged, to be a very pleasant, useful, advantageous Method, in all well-cultivated Soils; and " in those Years especially when Corn and Grass-Seeds of all kinds are dear, provided that there could " be such Instruments found out, which would be regular and punctual in the Delivery of the Seed at e- " qual Distances, being fully *convinced*, that the Sowing of Grain at *random*, and so thick as it used to be, " (whatever it is in Grass) is yet in Bread and other Corn, a very bad Practice."

But this Gentleman says, he hath found amongst the modern Authors *Gabriel Platt*, (whom I have never read) to have fell into this Way of *Thinking*. He relates from *Platt* the prodigious Benefit of this Sort of Husbandry, which appears to be only the Setting of Corn by Hand, and as it seems to me his Instruments were a Sort of *Setting-Sticks* of Iron, which in some Places are called *Dibbles*. Whatever they were, they could have no Resemblance of *mine*, as the Practice was inferiour, as may easily appear by the Gentleman's Relation of it. He has the following Paragraph:

" And this Method, which was partly put into Practice in the Year 1601. (when a little Treatise of that " kind was published) was in great Repute; but afterwards, when the Price of Wheat grew cheap, and La- " bourer's Wages grew higher, that Practice ceased for Want of more expeditious Ways by Instruments, " *which Want* the Author of the *Horse-hoing Husbandry* (with what Success we are not able at present to say) " has lately endeavoured to supply."

The Letter concludes thus:

" I have read what *Worledge* and the Author of the *Horse-Hoing Husbandry* have wrote on this Subject; " which with my own Observations shall be the Subject of some other Letter.

I am your Assured Friend and Servant,

I. K.

I hope this Judgment of both Strangers and Enemies may be sufficient to justify the Solicitations that procured my Essay to be written and published.

P. i. L. 38. *Much of the Speculative Part left out, if it had been more, it had been no great Matter.*] Not that too much of it is possible to be writ; but because I had started more Points than I had Time and Opportunity to write of so fully as I desired; for in this Matter I am of an Opinion quite contrary to Mr. *Evelyn's*, who blames the Writers on *Husbandry* for being too *full* in Particulars, and for not writing on more Points: He would have them be more in Generals, and less full in Particulars; which seems to me to have been the Fault of every Writer on this Subject; and 'tis not much better than to be *Aliquod in Omnibus, in Singulis Nihil.*

But indeed many Points started may, when enlarged on, serve for framing more *Hypotheses*, as well as for strengthening those already framed: And they are so useful for Discoveries in Natural Philosophy, that tho' they should be all of them in some Part *false*; yet amongst them they bring *Truths* to light, which without *Hypotheses* might have never appeared.

P. ii. L. 34. *I beg Pardon of the Learned Writers from whom I am forced to differ in Opinion, &c.*] The *Equivocal* Society accuse me with condemning all Authors, pretending that I say in my *Treatise*, that *all their Books are fit for nothing, but to be throwun into the Fire*; and that, *in Imitation of a certain Nobleman, I had carried them on a* Hand-barrow *and burnt them*. But as I never have said any such Thing, this Falsity is a mere Invention of that Society.

The Story of the *Hand-barrow* inserted in my *Preface* to the *Specimen*, being first told me of a Lord Chancellor, eminent both for Eloquence and Justice, by a Person of Rank, and since confirmed by others, I have no Reason to doubt the Truth of it: But for my Part, I was so far from passing Sentence on those Authors, that I had, when this was first told me, read none of them, and not many of them yet; nor had I ever an Inclination to burn any Writings of Agriculture, except my own, which I had certainly done, instead of publishing them, for my Dislike of the Style and Manner of Expression different from the Elegance of other Authors, had it not been for the Truths they contained, which, as I apprehended, were extant in no other.

I had no Prejudice against the Person of any Author; and have made no Objection to their Opinions without giving my Reasons, which happen to be such as this bragging boasting Society have not been able to answer in any one Particular; for which I appeal to the judicious Reader of their two *Volumes*.

But how differently this Society treat Authors and their Books, appears in many Places of their *Treatise*, of which I will *quote* some, *viz.* in the *Introduction* to *Vol.* 1. *p.* xiv. they say, " Lord *Bacon*, *Hartlib*, *Blithe*, " *Houghton* and *Mortimer* fall extremely short, *&c.*" *P.* xv. Want of Experience in Mr. *Laurence*, who " hath fallen very short of the *Title* of his Book. Mr. *Bradley*'s trifling Repetitions of what was of little " Use, *&c.*" *P.* xxii. Dr. *Woodward*, a Closet-Philosopher. *P.* xlvii. Much Rubbish in the Translated " Foreign Authors; and in the *Transactions* of the *Royal Society*, and in *Houghton's*, *Mortimer*, *Laurence* and " *Bradley*'s Works." *In p.* liv. Mr. *Evelyn* is so full of Erudition and Learning, that there is scarce room

" left

" left for Practice; besides the Works of Mr. *Evelyn* how much soever we revere them, are somewhat im- " methodical and confused, *&c.*" *In Essay* for *July*, *p.* 20. The Antients were whimsically extravagant." And in *p.* 22. Lord *Bacon* copy'd after them." In *Essay* for *Aug. p.* 14. Dr. *Lister* speaks in such dubious " unintelligible Terms, that 'tis difficult to collect any Thing from him, *&c.*" In *Essay* for *September*, *p.* 91. " Modern conceited Coxcombs; *p.* 92. empty conceited Noddles, *&c.*"

All this ill Treatment of Authors is little in Comparison to what may be found in those *Pages* wherein the Books of all Authors (I think none excepted) are affirmed to be worse than those of that Society; or, which is the same Thing, that the Society's Books are better than theirs; this being a greater Slander than any of the former, and fully proves by the Judgment of the *Equivocal* Society, that the Sentence of the Nobleman was just, which he caused to be executed on those Books, with the Hand-Barrow and Fire.

These System-Writers do not only vilify Authors, but Countries too; as in their *Preface* to *July*, *p.* xv. *viz.* They say, " For as they [the *French* Nation] are a People of no solid Attention to Things, but " run away with every plausible Notion, 'tis no Wonder they err so often as they do." In *Essay* for *June* *p.* 78. " Fit only for *Irishmen* and Clowns." In *Essay* for *Aug. p.* 27. " Only a Detail of *Irish Jargon*." In *Advertisement* to *Vol.* 2. *Sots* and *Ignoramus's* are Terms applied to the *British* Nation by this *Equivocal* Society, who pretend to so much Politeness.

These Pretenders to Agriculture *in Introduction* to *Apr. p.* xlviii. and xlix. presumptuously take upon them to direct the Education of Noblemen and Gentlemen: They censure the *Universities*, condemn their *Learning*, and opprobriously call their *Volumes* of *Logick*, *Ethicks*, *Physicks*, *Metaphysicks*, &c. *Learned Lumber*, in which they say, " Time is spent to little or no Purpose, and how well many young Noblemen and Gentlemen mend the " Matter by their *Travels Abroad* is but too obvious to most People who converse with them after their " Return; from whence, instead of fine well-turned *Englishmen*, they appear like *Dancing-Masters*, and for- " med only as if they were designed for *Theatrical* Performances."

But the greatest Slander (except affirming themselves to be Gentlemen) is the criminal Charge of being my *Abettors*, which Crime they impute to Noblemen and Gentlemen of the first Rank, who they say were my Encouragers: Their Lawyer sure might have told his Brethren of the Society, that an *Abettor* is a heinous Criminal, that formerly used to be punished with Death.

These Authors have also had the Presumption to prefix the *Names* and *Titles* of Noblemen as Patrons of their Infamous Libel, to which they are either ashamed or affraid to subscribe their own Names; as if Defamation, Scurrility, and notorious Falshoods would be defended by Persons of the nicest Honour, Politeness, and Veracity.

The ill Manners of these latent Authors make it improbable that they are acquainted with the Conversation of Noblemen or Gentlemen any more than with University Learning, which they term *Learned Lumber*, and so much despise it, that they seldom make use of any other *Logick*, than that of *Billingsgate* in their *System*; instead of arguing against me like Men, they fall to calling me *Names*, *Atheist*, *Infidel*, *Fool*, *Mente captus*, *Madman*, *Ass*, *Owl*, *Viper*, *Carping Insect*, &c. These are the *Feminine* Arguments of Scurrility with which my *Antagonists* endeavour to confute me. They scold like Oyster-women, but never argue like Philosophers, so great is their Contempt of Learning and the Manner of all learned Writers.

P. ii. L. 48. *His Partiality I have no Reason to apprehend; because, &c.*] I did not then apprehend that any one Man, much less a Society could have had an Interest sufficient to byass them in this Decision.

Here it may not be amiss to enquire, what Sort of Men the *Equivocal* Society consists of? And the Reader will easily discern them to be such who for want of (or perhaps being unfit for) more honest Employments, have enlisted themselves in the Service of certain Tradesmen; and are, as Mr. *Miller* (in his *Proposals* for Printing his *Dictionary*) says, " Set to work by such whose Business it is to watch and please the various " Tastes of their Customers, and who never fail to oblige the World with Treatises enough, upon whatever Sub- " ject they find most in Vogue, and seem to think they have nothing more to do, than after having formed a " Title-Page that may strike the Reader's Attention, to procure an Author to write to it, however qualified he " may be for that particular Subject, and who, on that Occasion, generally takes his Helps from what " has been written before, being intirely unaquainted with the Practice either of the past or present " Times."

They have it seems a numerous Retinue of these *Hirelings*, which they muster together in a Band and call them a Society, when any considerable Mischief is to be attemped by them; and such their Masters allowed their Undertaking to be, when they declared the Purpose for which their Army of Penmen was raised, *viz.* To *Damn* the *Essay* on *Horse-hoing*, which they afterwards said, they did not fear but would be effected; for that the best Pens were at work in writing an Answer to it; and this they soon published under the *Title* of *The practical Husbandman* and *Planter*.

The Cause the Shopmen pretended for menacing War, was in Effect *this*; That they thought they had a Sort of Right to the *Publishing* of all Books in their *Names*; and to have the Profit of Selling them (if any be) which they seldom own, but generally complain of Loss by them.

But the Reason of this extraordinary Indignation is given *in the Beginning* of the *Pref.* to *Aug.* in the following Words: " Amongst all the Essays which have for these many Years last past been wrote on Husbandry, there " is none that has raised the Expectations of the Curious to that great Height before it came out, as that of " the *Horse-hoing Husbandry*, said to be wrote by *Jethro Tull*, *Esq.* of, *&c.*"

They seem to take great *Liberties*, because there is no *Dedication* of my *Essay*; the Reason of which Omission was, The Queen having done me the Honour to subscribe to my Book, I could not Dedicate it to any other Person; and her Majesty's Royal Virtues being too far above any *Panegyrick* I was able to write, I chose rather to leave it to the Protection of the *Royal Licence* and the Laws.

If you would have the true Character of these boasted able Penmen; see in the last *Page* of their *Pref.* to *July*, their dubious Description of themselves in the following Words: " Nor can we guess whether of the two, " those who pick a Pocket, or pirate another Man's Works (without acknowledging from whence they ex- " tract it) are the most notorious Criminals."

It would not be difficult to prove the secret Society guilty of pirating other Mens Works, without acknowledging from whence they extract it, and in particular some of Dr. *Woodward's*, and some of mine.

They

They also are no better than Pirates, who publish a considerable Part of another Man's Works, in Prejudice to the Sale of his Book: In this Manner have the Society pirated a great Part of the Rev. Mr. *Hales's Vegetable Staticks*, and some of his *Plates*. And if all they have taken from others in this Manner were extracted from their two *Volumes*, I believe, nothing would remain of their boasted *System*, except the Relation of false Facts which they affirm to be true, and the true Ones they pretend to be False, their opprobrious Scurrilous Language, and *Nonsence*; for they have not only renounced common Honesty, but common Sence too.

By the Manner of their Proceedings, they seem to resemble a modern Gang of Foot-Pads, more than Pick-Pockets, they are not content with Robbing a Man of his Property, but they use him barbarously too; they wound or murder his Reputation, which, to a Gentleman, is more valuable than Life; whereas Pick-Pockets are generally content with Handkerchiefs, Snuff-Boxes, or such Trifles; they are therefore less notorious Criminals than the secret Society.

A Libel is a Crime against the Peace, as it is a Provocation to the Breach of it; but the secret Society conceal their own Names whilst they level Slander at mine; like the cowardly *Italian Banditti*, who conceal their own Persons behind a Rock when they discharge their *Vollies* at a defenceless Traveller.

As to their pretended *General System* of *Agriculture*, they made the most *mountainous* Promises that ever were heard of; but what have they brought *forth?* Why, not a *Mouse* indeed, but a *Scorpion*, which is a poisonous *Insect*, the Wounds of whose venomous Teeth are cured by the Juices express'd from its bruised Body: So the (Libel or) *Equivocal* Scorpion is full of *Contradictions*, one of which, if rightly extracted is an Antidote against the Poison of its Opposite: A short *Specimen* of those Contradictions here follows, *viz.* They accuse my Husbandry of Novelty and of being Crazy and *New-fangled*, and yet say it was put in Practice above 130 Years ago. They extol the Conduct of the Ancients, and yet say they were *whimsically* extravagant. They say I am a *Mente Captus*, and yet *quote* my Authority, and pirate Part of my Book. They pretend to prove by an inserted *Letter* of *J. K.* that I am not the Inventor of my Husbandry-Instruments, but that very Letter proves that I am.

The practical Husbandman contradicts the *Title* of his Book, when in *p.* x. of his *Pref.* to *Aug.* he shews that he doth not *know* Plowing from Harrowing, and it may be thence inferred he doth not know a Plow from a Harrow; as it may be inferred from *p.* xxxii. of the same *Preface*, that he doth not know my Drill from *Platt's Setting-stick*, nor my Hoe-Plow from the *Sheim* of *Kent*. His *Title* should have been *The Cockney Husbandman, who never practised* Agriculture *out of the Sound of Bow-Bell*: As appears in the *System* which yet the Society affirm in *p.* ii. of *Pref.* to *Apr.* is not collected out of Books, but is chiefly the Result of *Practice itself*.

Note, I do not suppose any of their Letter-writers to be of the secret Society, except the Lawyer *I. B.* who owns himself (a Degenerate to his Profession!) to have had a Share in writing the scurrilous *Preface* to *August*.

P. iii. L. 34. *The Matter of Fact I have related.*] It would have been rather against my Interest than for it, to relate any Fact falsely; none being acted at so great a Distance, or with such Privacy, but that any One who would take the Pains might satisfy himself, as several Noblemen and many Gentlemen did by Ocular Inspection.

'Tis true an *Ipse dixit* in speculative Matters is of little Weight; but of such Matters of Fact as *Equivocus* says (if he says true) that no body knows but my self, what other Proof could I give?

P. iv. L. 8. *Or if he doubts, it can't cost much to satisfy himself by proper Trials.*] But then he must take special Care that his Trials be proper. I do not advise any one to be at the Expence of my Instruments for that Purpose, but to *imitate* them in pulverizing and all other directed Operations by the *Spade* and common *Hoes*. His Ridges of Experiment need be no *longer* than six Foot. Instead of a Drill make use of a Triangular Piece of Wood seven Foot long, and four or five Inches thick, with one Edge of which, make Channels, and place the Seed regularly even into them, by Hand, and cover it with the same Piece of Wood; but if the Earth be so wet as to cling to the Piece, then make use of it only as a Ruler whereby to make the Channels streight with a Stick.

Let some of the Ridges have double Rows, others treble; and let some have treble Rows Half-Way, and leave out the middle Row in the other Half, to shew whether the double Row or the treble Row produce the better Crop.

Then for the *first* Time of Hoing, the Spade must Work with its Back towards the Row. The *second* Time, in turning the Earth to the Row, the Spade's Face must be towards it. These two, and several other Hoings should be deep; but when the Roots are large, (and the Hoing is near the Plants) the Spade must go shallow and neither the Face nor the Back of it must be towards the Row, except when the Earth is turned towards it, and then the Face must be always towards it, but for the rest of the last Hoings, the Spade should work with its Face towards one or other of the Ends of the Intervals, that the fewer of the Roots may be cut off, and the more of them removed and covered again. Let the *Spits* be thin for the better pulverizing of the Mould. The Hand-Hoe will sometimes be useful in the Intervals, as well as in the Partitions.

Four or five Perches of Land may suffice for making proper Trials.

The Expence of this will be little, though perhaps ten Times more than that which is done by the proper Instruments, for the same Proportion of Land.

But I must give this Caution, that no Part of it be done out of the Reach of the Master's Eye; for if it should, he may expect to be disappointed.

The richer the Land, the thinner it must be planted to prevent the Lodging of Corn.

The Master ought to compute the Quantity of Seed due to each Perch at the Rate of 5 or 6 Gallons to an Acre, by weighing, *&c.* as I have shewn in my *Essay*.

I cannot commend more than two Partitions in a Row, or more than one when the Intervals are narrow; because the broader the Row is the more Earth will remain unpulverized, under the Partitions; too much of which Earth being *whole*, will disappoint, at least, one of the Differences mentioned in my xixth *Chapter*.

Indifferent Land I think most proper whereon to make the Experiment, and the most improper for Corn is barren Land, as the Best brings the largest Crops.

To ascertain the Quantity of the Crop, take a Yard in the Middle of a Ridge, and weigh its Produce.

Every

Every Year leave one Interval unho'd, to prove the Difference of that Side of a double or treble Row next to it, from the other Side next to the ho'd Interval.

But it must be *noted*, That the Spade doth not always pulverize so much as the Plow or Hoe-Plow; therefore there may be occasion for more *Diggings* than there would be of *Horse-Hoings*.

One of the Observations that put me upon Trials of wide Intervals, and Horse-Work for Corn, was the Following, *viz.* One Half of a poorish Field, was sown with Barley; the other Half drijled with Turneps; the Rows thirty Inches asunder, at the proper Season; and twice hoed with a Sort of Horse-Hoe contrived for that Prupose (but nothing like that I have described) the Drill beginning next to the Barley, left an Interval of the same 30 Inch Breadth between the first Row of Turneps and the Barley, which being sown on large Furrows came up in a Sort of Rows, as is common for Barley to come when sown on such wide Furrows. This Interval between the Barley and the Turneps had the same Hoings as the Rest, and had this Effect on the broad Row of Barley next to it, *viz.* Each Plant had many Stalks, it was of a very deep flourishing Colour, grew high, the Ears very long, and in all Respects the Barley was as good as if it had been produced by the richest Land. The next Row of Barley had some little Benefit on the Side next to the strong Row; but all the rest of the Barley, either by the too late Sowing of it, the Poverty of the Soil (not being in any Manner dunged) or else by the Coldness of the Land, or Coldness of the Summer, or by all of these Causes, though pretty free from Weeds, was exceeding poor, yellow, low, thin, and the Ears were very short and small.

I intended to have taken the exact Difference there was between the Produce of this outside Row, and one of those that stood out of the Reach of the hoed Interval, but I was disappointed by my Neighbour's Herd of Cows that in the Night broke in just before Harvest, and eat off almost all the Ears of the rich Row, doing very little Damage to the Rest, except by treading it. It must be from the different Tastes, the One being sweet and the Other bitter, that they make their Election to eat the One and refuse the Other.

This accidental Observation was sufficient to demonstrate the Efficacy of deep Hoing, which I look upon as *Synonymous* to *Horse-Hoing*.

I immediately set about contriving my limber'd Hoe, finding all other Sorts insufficient for the Exactness required in this hoing Operation; Those drawn in any other Manner, when they went too far from the Row, and the Holder went to lift the Plow nearer, it would fly back again, like the *Sally* of a Bell and go at no Certainty, not being subject to the Guidance of the Holder, as the Limber-hoe-plow is. The *Michaelmas* following I began my present Horse-hoing Scheme; which has never yet deceived my Expectations, when performed according to the Directions I have given my Readers. And the Practice of this Scheme proves the Advantage of *Deep-Hoing*, by the Ends of the Ridges and Intervals, for there, whilst the Drawing Cattle go on the Headland that is higher, the Furrows are shallower, and the Corn of the Rows is always there visibly poorer in Proportion to that Shallowness.

Another Proof of the Difference there is between *deep Hoing* and *shallow*, is in the Garden, where a Square Perch of *Cabbages*, the Rows of which are three Foot assunder, the middle Row of them having the Intervals on each Side of it deeply and well dug by the Spade at the same proper Time, when the rest of the Intervals are hand-hoed; this middle Row will shew the Difference of those two Operations; but in this must be observed what I have here before mentioned, of turning the Back of the Spade to the Plants, to avoid the total removing them, especially in very dry Weather.

This Experiment hath been tried and always succeeds with every one that has made the Trials.

But before any one makes his Trials of my Field-Scheme, I would advise him to be Master of the Treatise, by making an *Index* himself to it: This will both direct him in his Proceedings, and shew him the Rashness of those, who go into the Practice of my Husbandry, without the necessary Preparation; for they that do so now, seem to act as rashly as they that went into it before the Treatise was published. 'Tis reasonable to presume that such their Practice must be either different from or contrary to mine.

This *Index* may be also useful for discovering Pretenders by an Examination, without which Gentlemen are liable to be imposed on by them, as I am afraid too many have been: for amongst all those who have undertaken the Management of my Scheme for Noblemen or others, I declare I do not know one Person that sufficiently understands it: There may be some who have seen or perhaps performed some of the mechanical Part; but I don't think it can be properly performed, without a thorough Knowledge of the Principles which cannot be expected of such illiterate Persons, and yet is necessary for the proper Applications in different Cases, which cannot be distinguished by Pretenders; therefore until the Scheme becomes common, the Management must be under the Direction of the Master himself, or of one who has past his Examination, and is faithful.

P. iv. L. 40. *The particular Scheme, &c.*] There is now the eleventh Crop of Wheat on the same Field (except that in the ninth Year by Accident of having contracted to let my Farm, it was drilled with White Oats) and I do not as yet see any Reason against its being continued for Wheat annually as long as 'tis kept in this Culture.

P. v. L. 8. *A single Crop.*] Is one which is not to be repeated the following Year by another Crop of Wheat.

P. v. L. 11. *Two Shares, thirty Inches assunder, &c.*] But if due Care be taken by the Driller to guide his Horse as he ought, there will be no Occasion of any other Drill for that Purpose, than the treble one, taking out its foremost Sheat, and setting the two Beams at the same Distance from each other's Middle, that the Partition is to have Breadth; and setting the Marking-Wheels to the Size of the Ridges. And this I have fully experienced since I wrote my *Essay*.

P. v. L. 47. *Other Vegetables such as, &c.*] Such Seeds as are unfit for Drilling whilst in the Husk, must be taken out of the Husk by the Mill or the Flail.

P. v. L. 51. *What Pretenders or Impostors have taught or said of this Husbandry, &c.*] Both these have been very injurious to it. By Pretenders, I mean such who having seen somewhat of the Drilling Scheme, without understanding it, set up for Masters, made great Numbers of my Engines (whether any were very good I know not) gave Directions for using them, and took upon themselves the whole Management, in Opposition to me, who they knew was not able to appear against them. To some they pretended to be Inventors, and to those who knew the Contrary, they pretended they acted by my Consent and Approbation. I could not but foresee the Mischief likely to ensue from their Follies, when I heard of them.

[They

They advised the Drilling of St. Foin upon Land that was *wet* too near the Surface in Winter; and had been planted before with that Grass, and it died in the Winter, and so did that which they drilled. This was great Folly in the Pretenders, because every new thing that miscarries in any Part is a Disparagement, tho' the Miscarriage be not from the Thing itself, but from the Misapplication of it: So was this, for the Cause was in the improper Land, not in the Drill (if I was told Truth) the St. Foin came up very well and *even*, and that is all that can be reasonably expected from the Engine. Their Directions about Drilling of Corn were likely to be as vain and ineffectual. To prevent the ill Consequence of their Proceedings, I did all that was in my Power by Letters; but for want of being present in Person, those Endeavours proved unsuccessful, though back'd by a *Noble Lord*, who knew my Integrity, and the Vanity of those Pretenders by his own Experience; and what was the worst Misfortune of all, one of the Pretenders (I may say the Chief) was a Person, for opposing of whom I was blamed and ill thought of even by those I would have secured against suffering by his Follies, which I opposed.

They who have made Trials by the Directions of any Pretenders before my Essay was published, can have made no Trial of *my* Husbandry; and consequently could not reasonably expect the Success of it, unless by a *Miracle* the Effect should be produced without the Cause; and who have been thus deceived, may through a causeless Disgust, as rashly desist (and deter others) from proceeding further when they have my Directions, as they began without them.

I saw in one of Mr. *Ellis*'s Books an Account of an Experiment, which to the best of my Remembrance was as follows, *viz.* A Farmer plowed his Ground in Furrows at eight Foot asunder, and into them sowed Beans by Hand; then he hoed these monstrous Intervals with a Wheel-Plow, which could not, I am confident, plow much nearer than two Foot from the Rows; so that the Bean-roots were not likely to reach the hoed Earth through such a Distance of unhoed hard Land, which was sufficient to produce Weeds that would starve the Beans; and for the Rows themselves they were probably so broad and irregularly planted, that it must be difficult to pull the Weeds and Grass from amongst the Beans: They could have no more Benefit from such Hoing than if it had been performed in an adjoining Field; the Event of such rash Proceedings is not hard to guess at, though Mr. *Ellis* had not told us that a very indifferent Crop of Beans was produced; and yet this is by the Ignorant judged as a Trial of Horse-Hoing.

As I live obscure from the World, I am not apprized of all such Trials that have been made; nor of any but by Accident: Yet I am persuaded, that he who consults my Essay, will judge all Examples of equal Rashness, to be for want of consulting it.

P. vi. L. 7. *To send them Servants to instruct them in it, &c.*] Since I began my Scheme, I have not had one, whom I could recommend for that Purpose. Hired Servants are arrived at such a Pitch of exorbitant Power and Conceit, that they think it an Affront to be put out of their Way; and therefore pretend they *cannot* do what they are only *unwilling* to do.

An Instance of this, I am informed, happen'd in the Case of a Nobleman (well skilled in Agriculture) who had two arable Estates in his Hands; on that which was near the Place of his Lordship's Residence, the four-coulter'd Plows had been used with Success: his Lordship therefore sent some of the same Sort to his other Estate, which was a Day or Two's Journey distant, with Orders for his Servants to use them there in like Manner; but a while after my Lord going down to see how those Plows had been there employ'd, he found that not one Furrow had been plowed with them. 'Twas in vain to be angry at the Disappointment; for Bailiff and Servants Steward and all affirmed, that though those Plows might be used on the other Estate, yet the Land of this was so different, that 'twas impossible to plow with them here. No Argument his Lordship could urge to convince them of their Mistake prevailed, because they were resolved not to be convinced; till at last my Lord went into the Field, set the Four-Coulters with the Wedges himself, threw off his Coat (and Ensigns of Honour) then plow'd a whole Land, or great Part of one with this Plow; at this the Plowmen were so ashamed, that they condescended to plow well with the Four-coulter'd Plows. 'Twas their Will not their Skill that was wanting before. Also several Farmers have had these Plows, and their Plowmen can easily Plow with them; but when the Master is out of Sight, they either throw the three foremost Coulters into the Hedge, tye them up under the Beam, or else set their Points above the Ground; in which last Case if they see the Master coming, they stop their Horses and pretend to be wedging the Coulters. By this may be guess'd what will be the Case with my other Instruments, where the Master expects to be taught by Servants.

P. vi. L. 12. *That few Gentlemen can keep their Lands, &c.*] But 'tis feared the three Statutes, which now in a manner *prohibit* them to *occupy* their Lands, will e'er long *compel* them to it, by *prohibiting* Renters, whose Patience and Substance are so much diminished, that a Scarcity of Tenants that can pay their Rent is already complained of.

P. vi. L. 28. *The Disreputation, &c.*] To Gentlemen are owing all (or most of) our Improvements in Agriculture, notwithstanding the Disadvantages they have in respect of their Price of Labour different from that of the labouring Farmers, it being a common *Maxim*, that the Rent of arable Land is the Odds between saying to the Hirelings, *Go, do it*; and saying, *Come let us do it*. And the Disadvantage even of the Farmer, now is to pay (if he hires it) two Years Rent for the same Labour that forty Years ago was reckoned at but one Year's Rent, though the Price of Corn and other Provisions be lower now than 'twas then; and indeed we find, that the Price of Labour *rises* in Proportion to the Cheapness of Corn; the lower that is, the higher is the Price of Labour; and when those *Hirelings* have raised their Price, they seldom or never abate of it. I wish therefore (as far as is consistent with the publick Good) Gentlemen had such *Automata*, until the *Three Statutes* that make them needful, are made effectual to the Purposes for which they were designed; and that 'tis feared will be impossible, without first repealing them, and then making all three into one, to be so executed, that Gentlemen and other Freeholders may not be wronged in Person, Lands or Goods by Trials *at Discretion* against the *Common Law*.

P. vii. L. 24. *Make the Improvement by St. Foin the greater.*] What added to this Improvement, was the exorbitant Price of Labour, of which a vast Quantity is necessary to Corn more than to *St. Foin*, though the Product of the latter was of more Value; but there is now a great Alteration in both, as to the Quantity of Labour, and Price of the Product. At present the Labour of making Hay costeth treble to what it did formerly, whereas the Labour of Arable Land costeth only double: The Haymakers, till within these few Years past, used to work on the Hay as late in the Evening as was convenient for the well-making of it, which is often till between seven and eight o'Clock, which is the Time expressed by the Statute: But now they have taken

taken upon them to make what *Laws* they please in this Matter; they have limited the Hour for leaving Work to Six o'Clock; and thus, when they have a Fancy to leave off, they say 'tis Six o'Clock, though but Five; and I have seen them going home at Four, when they did not begin till Nine or Ten in the Morning, and rest a good Part of the Day besides.

This only increases the Price of Labour; but, what is much worse, the Hay is in great Danger of being spoiled by the Neglect that loseth the Benefit of the Evening *Sun*: And altho' the Hay be all spoiled by such Neglect the Wages, how extravagant soever, must be immediately paid, or the Owner will risque being sent to the House of Correction as the Law now stands.

Another Thing that lessens this Improvement in the Country where I live, is, that artificial Grasses are grown so common, that Hay which used in dry Years to be sold at Three Pounds *per* Ton, is now not vendible, nor ever likely to be again in any considerable Quantity. *St. Foin* Seed too partakes of the Fate of Hay; I had planted fifty Acres of *St. Foin* on purpose for Seed, in a Manner that would have delivered me from the greatest Inconveniences that attended the Management of a large Quantity, the worst of which was the Danger of being by moist Weather kept in the Field until Corn-Harvest: To avoid this, I planted it in double Rows, with Partitions of eight Inches, and Intervals of about thirty Inches for Horse-hoing, by which Means the Plants being very strong, bring their Ears all of a pretty equal Height, so that they may be reaped off as soon as ripe, at a small Expence, and easily dried and laid up long enough before Harvest, as well as the Hay mowed, which keeping the Leaves on, must needs be much better than that which is threshed. This would have brought me four Times the Rent of the Land, but now most Farmers know how to cure this Seed, and raise it themselves for their own Use, and Seed is no more vendible than Hay: Therefore I have neglected to hoe these fifty Acres, which yet supply me with Hay enough for my Cattle, and I have plowed up all the rest, and when I have planted more in a proper Manner for Hay, I shall plow up this too, and depend upon Corn only, as the best Product of my Farm, since more Hay than enough for my Working Cattle and necessary Milch Kine is of no Value to me, as I do not understand the difficult Art of a *Grazier*. If any one upon View of this should be offended at the *wide Intervals*, he is here advertised, that it was not so planted on purpose for Hay only, but for Seed: And yet when the Grass is ready to be mowed, the Intervals of the greatest part of this St. Foin are scarce visible, and the Crop is good.

P. vii. L. 38. *May also Hand-hoe between the nearest Rows, &c.*] By this Means the Farmer may, if he has Plenty of Hands, remedy the only Evil (except the Expence) of his Dunghil. But I can tell him upon full Experience, that if he drills his Rows nearer than at a competent Distance, his Crop will be diminished, as well as his Labour encreased.

P. viii L. 1. *For want of technical Words, &c.*] The Vulgar Terms of Artificers are so various, and different in different Places, that if I had known enough of them to discribe my Engines by them, such Description would have been perspicuous to a Few only: But as I have described them in *Mathematical* Terms which are familiar to all Gentlemen, I presume they can with great Facility direct Workmen to make them in any Country.

P. viii. L. 8. *In its full Dimensions, &c.*] Every Figure of the Drill-Boxes in *Plates* 2 and 3 have them; but if in any of the other *Plates* the Dimensions of a *Pin* or *Standard* should happen to be omitted, every Man's Reason will supply such a Defect.

P. viii. L. 18. *That it was not in my Power to describe, &c.*] I am also sorry there is not a particular Harrow described (which was not then made) for harrowing the Tops of the Ridges, without throwing down so much of their Mould as common Harrows do.

But this Harrow may be supply'd by two very light common Harrows, they cannot be too light: They are held together in the same Manner that other common Harrows are, except that their Pole (here called a Rider) is fastened to each Harrow in two Places, which keeps them both as level as if they were one single Harrow, not suffering them to rise in one Part and sink in another Part, as Harrows do when they are fastened to their Rider in the common Manner. One *Ox* goes in the Furrow between two Ridges and draws these Harrows, which harrow them both at once in the best Manner for the drilling Purpose.

There is also a Roller of Oak eleven Inches in Diameter, ten Foot long, with a common *Frame*; 'tis drawn by one Beast: This though *light*, bearing only upon the Tops of two Ridges, is a sufficient Weight for breaking the small Clods, or pressing them down, which is sometimes of great Advantage to the Hand-hoing in Spring Time: But a Roller must not be used when the Earth under the Partitions is moist enough to be squeezed by its Weight.

I now wish there had been Time, *&c.* for describing in *Wood*, that Part of my Drill which I have described in *Brass*, which is that Part, the *Idea* whereof I took from the *Organ*. Indeed Brass is the fittest Material for it; but there are more than 100 Workmen who can be taught to make it in Wood, for one Worker in Brass. Yet I own, that such Description, though it might have saved the *Director* in *Wood* some Trouble, is not necessary; because a Person who has made himself acquainted with its Fabrick by consulting my *Plates* and their Explanations, will see that there is no Difference in the performing Part, whether it be made of dry Box-Tree Wood, or of Metal: 'Tis only in Respect of the different Strength of the different Matter, as the Wood being weaker, must be thicker than Brass, and the Sides of the Boxes longer at each End to have room for the Screws that hold the Sides together.

P. viii. L. 26. *To go in the Middle of the Interval, &c.*] This is only when the Intervals are pretty wide; for when they are narrow, the Wheel must go near to the Row on the opposite Side of the Interval.

This Drill is become extraordinary useful, and by the Improvements made to it, doth supply the Place of the Turnep-Drill described in *Plate* 5. where the Mould is fine. 'Tis also more proper for planting single Rows in a Garden as 'tis much lighter, and more easily carried from Place to Place as it consists of one Piece, the Hopper being fastened to the Plow.

P. viii. L. 31. *All three were too many, &c.*] Fully to discuss every Point of the *first* Part, is I suppose too much for any one Author: To recollect on a Sudden every Observation I have made on the *second*, would require a better Memory than mine: To describe every Sort of Drill I have used since the Year 1700, which might be acceptable to the Curious; and the particular Tools that might be helpful to Country Workmen, for making them, would require a great Number of *Plates* at an Expence not reasonable for me to lay out, especially since the Profit that might arise by the Sale, would chiefly accrue to the Tradsmen of *Ireland*, who can have a *Plate* copied for 10*s.* which would cost me above 20 *Guineas*, and then they may vend my whole

whole Book (as they are said to have done) privately in the *North* and *West* Parts of *Britain*, and perhaps to those Tradsemen here, who have declared themselves my Enemies.

Notwithstanding I could have no Assistance in the three Parts, they gave me very little Trouble in comparison to that I underwent with an infernal Train of Mechanicks, *Scribes, Printers, Drawers, Ingravers, &c.* who taking the Advantage of my Confinement, not only put me to a double Expence (towards defrafying of which the Subscriptions did next to Nothing) but also by Delays, Tricks, and fraudulent Practcies, gave me such an Embarrass, that if I had foreseen, I would not have underwent, though I had been sure of ever so great Gain for it. And yet its necessary for an Author to *print* for *himself*, who writes of his own *Scheme*, which he really believes may be useful; because whilst his *Copy* is in his Power, he may be still improving and adding to it; but if he disposes of his Copy to a Tradsman in his Life-time, he consents to the destroying of his own Off-spring, and is guilty of a Kind of *Parricide*. If I had been so Sordid, this Supplement had not been written, which I hope has made all the three *Parts* less imperfect, and supply'd every Thing *necessary* that was wanting in my *Essay*: 'Tis more than I could absolutely Promise; because my Diseases afforded only a bare Possibility of Living to do it.

P. viii. L. 37. *With Answers to Objections which, &c.*] I am yet appriz'd of no other Objection as to the Husbandry it self, material enough to deserve an Answer; but there are several Objections which indirectly relate to the putting it in Practice, which do not justly belong to the Husbandry, *viz.* 'Tis said that Workmen do not care to undertake the Making of the *Drill*, though it is by all allowed to be fully described: How then can it be difficult for a Gentleman to direct the Making of it by these Descriptions, when One but meanly qualify'd took it from the *Organ* and thus fully described it?

'Tis said that Gentlemen's Servants, and Bailiffs do not care to put the Husbandry in Execution. Why should not their Servants execute it better than mine do, since a Person in Health may better command his, and attend them oftener than I can mine?

'Tis objected that Gentlemen will not take the Trouble of Studying it. The same Objection may be made to *Algebra, Navigation*, or any other Art or Science; yet can be no reasonable Objection against it, but only against the Unreasonableness of him who would understand it, without the necessary Trouble of Studying it.

Some have thought it an Objection against the Husbandy, if all the Neighbourhood where 'tis practised do not immediately come in to it; on this Enquiry they lay a great Stress: But they may as well enquire why the People of *Madrid* or *Lisbon* do not turn *Protestants* when some *English* live there and converse with them; for there doth not seem to be more Prejudice (especially among the Vulgar) in Matters of Religion than of Agriculture: In both, the Question is not whether a different Religion or a different Agriculture is most reasonable, but only whether it be *different*: and if it be, those who practice that which the Oppo'ers call *New*, are sure to be treated as the *Secret Society* treat me, or as *Protestants* are treated in *Popish* Countries, where the *Priests*, unable to confute their Arguments, misrepresent both their Principles and their Persons; they term them *Hereticks*, and paint them as Monsters with *Toads Claws* instead of Hands and Feet (this have I seen in the Jesuits Church at *Naples*.)

'The *Secret Society* likewise are not content with abusing my Vegetable Principles, and terming me an *Atheist*, but also describe me by the Similitude of the most odious, despicable, and pestiferous Animals. They also usurp the Power of the Inquisition of *Damning* Books because not their own.

Besides it may be difficult to find the Truth of Facts upon such an Enquiry; the Persons in Possession of Tenets, be they ever so false, will endeavour to support them by any Methods of misrepresenting their Opposites, rather than quit the Notions they have received from long Custom, perhaps without ever enquiring into the Reason of them.

Whatever Accident, even from the Heavens, as Lightening, Tempest, a wet Harvest, or from Cattle, or the like, happens to drilled Corn, it is sure to be imputed to the *Drilling*; though sown Corn be as much or more damaged by it.

But the oddest Misrepresentation was to the Eyes of a Stranger, who was shewn a Field for drilled Wheat, which was neither *drilled* nor *Sown*, but shattered at Harvest and plowed in before the Leasers had picked up the Ears: 'Twas about 6 or 7 Years ago, after a general Blight, which had made the Straws rotten, so that many Ears were broken off in reaping; but in some Parts of the Field more than in others: The Intervals being plow'd at two Furrows, for a succeeding Crop of Wheat, were found too narrow for that Purpose; and therefore the whole Piece was left with Design to be planted with Barley in the Spring: But the *shattered* Wheat coming up pretty thick in most Places; it was, instead of Plowing, Horse-hoed, but not properly, because the Wheat coming up irregularly all over the two Furrows, there was not half Room enough for proper Hoing, though much of the Wheat was unavoidably plowed up by the Ho-Plow; but yet by being thus hoed pretty often, the Remainder of the Wheat that was not plow'd out became Strong; and was such a Crop that at the Price Wheat was then at, did more than answer the Expence and Rent of the Land: But it was abominable for any One to shew it to a Stranger as a Crop of *drilled* Wheat, on purpose to deceive him. Many more of the like Misrepresentations may be expected from People who are Enemies to every Thing that is different to what they are accustomed to practise.

As to what concerns my own Interest, I know no odds it will be to me, whether any body except myself shall practise any Part of my Husbandry or not: I never went about to make *Proselytes* to my Principles, except by what I have writ at the Request of others. But as yet I do not find any Objection has been made against them; besides those in this *Supplement* answered; which is all, I hope, that is incumbent upon me to do for them who desire to practise.

Some who, if I should Name them, would be allowed as good Judges of such Matters, have upon a full View and Examination of the Practice of it, far distant from me, declared their Opinion, that it would one Day become the general Husbandry of *England*: But whether it may or not, I cannot pretend to divine; nor doth it any way concern me. If it be ever common it must be made so by Gentlemen, as other Improvements have been, the Chief whereof is, I think, said to be the Introduction of Sowing Foreign Grasses, and which was so long before it became common amongst Farmers, that though Mr. *Blithe* wrote of it in *Cromwell's* Time, yet but thirty Years ago, when any Farmer in the Country where I live was advised to *sow Clover*, he was certain to say, *Gentlemen might sow it, if they pleased: but they* [*the Farmers*] *must take Care to pay their Rent*. As if the Sowing of Clover would disable them from paying it, and now the Case is so much altered, that they can't pretend to pay their Rent *without sowing it*, though the Profit of it

it was vastly greater before it was common than since; nor was there any Difficulty in the Practice of it, any more than the sowing the Seed among their Corn, as they saw done for Gentlemen, for fifty Years before them: And the Improvement itself was at the first no more than doing the same Thing on this Side the Water, that was done before on the other. The same was the Case of *St. Foin* as of *Clover*, *St. Foin* having been in *England* almost 100 Years, and is become common, but very lately. The *Drilling* Husbandry seems likely to make a much speedier Progress, if my Enemies the *Secret Society* are right, when they in *Essay* for *April*, p. 86. talk of "*Drilling* Lucerne *by the Drill plow as Turnept generally are*." If Turneps are *generally* drilled already, drilling has made a quick Progress; for there never was (that I can hear of) any *Engine* made for Drilling of *Turneps*, *Clover*, or other *small Seeds*, before the Year 1720. And 'twas some Years *later* that my *Vineyard* Culture was first begun to be practised on Wheat; which is not a fourth Part of the Time that the *Clover* Improvement was commonly neglected after begun.

And this Sort of *New* Hoing-Husbandry being so different from the *Old* Husbandry, it may be expected (like most other Inventions) to be imperfect in the Beginnings, especially when practised by those who are Strangers to it. The greatest Reason I have to believe it may be common hereafter, is that no good Reason has been given (which I am appriz'd of) why this Hoing should not be beneficial to Corn and other Vegetables upon the same Accounts as 'tis to Vines. I am sure in all my Experience of the Practice I can find none.

Among the *Answers* of this *Note*, I am afraid *one* will be expected, why I answer *anonymous* Writers of Scurrility. Perhaps I should not have taken any Notice of them, if my Name had been set to my *Essay*; but I have now taken Notice of them for two Reasons. *First*, To prevent their imposing upon the Publick, especially the Vulgar. *Secondly*, as their *Wages* is supposed to be *low*, their Masters find them in *Tools* to work with, their Shops being full stockt with Books of all the Authors who have writ on my Subject; an Account of which the *Journeymen* have published; I have taken this Opportunity to answer all their Opinions that interfere with any material Part of my Theory or Practice: Those Books are so numerous, that it would have cost me too much Money to purchase them, tho' I should have had a *Catalogue* of them, as I never had heard of half their Names or *Titles*.

My Preface *to the* Specimen *published in* 1730-1, *not being reprinted in* England, *is not likely to be in the Hands of every Reader of my* Essay; *therefore I here insert some Parts of it*: First *to shew that what I have said of the Hand-barrow has been misrepresented by my Enemies*. Secondly, *the Part that relates to the Drill*; *and* Thirdly, *some of the* Cautions *I have given against going rashly into the Practice of the* Horse-hoing Husbandry. *The First is as follows*:

WRITING and *Ploughing* are two different Talents; and he that writes well, must have spent in his *Study* that Time, which is necessary to be spent in the *Fields*, by him who will be Master of the Art of Cultivating them.

To write then Effectually of *Ploughing*, one must not be qualified to write *Learnedly*.

SCARCE any Subject has had more of the Ornaments of Learning bestowed on it, than *Agriculture* has, by ancient and modern Writers: But a late Great Man, who was the *Cicero* of this Age, having perused all their Books of Husbandry, ordered them, notwithstanding their Eloquence, to be carried upon a Hand-Barrow out of his Study, and thrown into the Fire; least others should lose their Time in reading them, as he had done. He declared he could not for his Life guess what those Authors would be at; for they treated of an Art wherein they had formed no manner of Principles

NOW if these learned Volumes so elegantly written, and so little to the Purpose, have done nothing but Mischief; 'tis Time that something should be written different from them, in both Respects.

HOW far *I* am capable of performing such a Task in one of these Respects, this Part of my *Essay* will shew; but what *I* have done different from them in the other of the two Respects, cannot be fairly judged of, before the whole appears.

— *The* Second Part *concerning the* DRILL.

I should not trouble the Reader with an Account how accidentally it (the *Drill*) was discovered, were it not to shew, that the Knowledge of a Thing which seems despicable or impertinent, may unexpectedly become useful at one Time or other.

WHEN *I* was Young, my Diversion was *Musick*: *I* had also the Curiosity to acquaint myself throughly with the Fabrick of every Part of my Organ; but as little thinking that ever *I* should take from thence, the first Rudiments of a

Drill as that *I* ſhould ever have occaſion of ſuch a Machine or Practiſe *Agriculture*; for it was Accident, not Choice, that made me a Farmer, or rather many Accidents which could not then poſſibly be foreſeen.

'TWAS my Chance afterwards to have a large Farm in Hand, which I could not well diſpoſe of; and it being about the Time, when Plough-Servants firſt began to exalt their Dominion over their Maſters, ſo that a Gentleman-Farmer was allow'd to make but little Profit of his Arable Lands; and almoſt all mine being of that Sort, *I* reſolved to plant my whole Farm with St. *Foin*; but the Seed of it being ſcarce, and dear, and very little of it good, I found it would be very difficult to procure a ſufficient Quantity to ſow, at ſeven Buſhels to each Acre, which were uſually ſown: Whereupon I began to examine whether ſo great a Quantity of Seed was abſolutely neceſſary; and whether the greateſt Part of the Seed ſown, did not commonly miſcarry, either by its Badneſs, or from being buried too deep, or 'elſe lying on the Ground uncovered: And *I* obſerved in ſeveral Fields of St. *Foin*, ſown with that Proportion of Seed, that in thoſe Parts of them which produced the beſt Crop, there were (as I counted them when the Crop was taken off) but about one Plant for each ſquare Foot of Surface; and yet the Number of Seeds in ſeven Buſhels ſown on each Acre, being calculated, amounted to one hundred and forty to each Square Foot; and what was yet more obſervable, in other Parts of the ſame Fields, where a much leſs Number of Seeds had miſcarried, the Crop was leſs. Then after I had learned perfectly how to diſtinguiſh good Seeds from bad, and had, by many Trials, found that ſcarce any, even of the beſt, would ſucceed, unleſs covered at a certain exact Depth (eſpecially in my ſtrong Land) and had alſo found the Reaſon of this Nicety, I employ'd People to make Channels, and ſow a very ſmall Proportion of Seed therein, and cover it exactly.

THIS Way ſucceeded to my Deſire, and was in Seed and Labour but a fourth Part of the Expence of the common Way, and yet the Ground was better planted.

TEN Acres being ſo well done, *I* did not doubt, but a thouſand might have been as well done in the ſame manner; but the next Year as ſoon as I began to plant I diſcover'd, that theſe People had conſpired to diſappoint me, for the future, and never to plant a Row tolerably well again: perhaps jealous, that if a great Quantity of Land ſhould be taken from the Plough, it might prove a Diminution of their Power: I was forced to diſmiſs my Labourers, reſolving to quit my Scheme, unleſs I could contrive an Engine to plant St. *Foin* more faithfully than ſuch Hands would do.

TO that Purpoſe I examin'd and compar'd all the mechanical Ideas that ever had entered my Imagination, and at laſt pitched upon a *Groove*, *Tongue*, and *Spring* in the *Sound-Board* of the *Organ*: With theſe a little altered, and ſome Parts of two other Inſtruments as foreign to the Field as the Organ is, added to them, I compoſed my Machine: 'Twas named a *Drill*: becauſe when Farmers us'd to ſow their Beans and Peas into Channels or Furrows, by Hand, they call'd that Action, *Drilling*.

IT planted that Farm much better than Hands could have done, and many hundred Acres beſides: and thirty Years Experience ſhews, that St. *Foin*, thus planted, brings better Crops, and laſteth longer than ſown St. *Foin*.

THIS *Drill* has alſo been us'd almoſt as long in planting moſt Sorts of Corn for Hand-Houghing: and theſe laſt nine Years for Horſe-Houghing.

I am ſurpriz'd to hear that ſome Gentlemen pretend I brought this Inſtrument from *France* or *Italy*, when 'tis well known it had planted two Farms with *St. Foin* before I travelled, which was not till *April* 1711, being above ten Years after making and uſing my Drill: The praiſed *Commentator* on the *Georgic* can teſtify this, he having twenty-ſeven Years ago ſeen the Fields of my laſt Farm planted in Rows by it. I gave

I gave one to a Neighbour, who uſed it in his Fields every Year, whilſt I was abroad: And it would be ſtrange, if I ſhould bring it from Countries where it never was.

I could bring a Multitude of undeniable Teſtimonies to prove myſelf the ſole *Inventor*, but as I am no *Patentee*, nor can have any Benefit but rather Loſs by publiſhing the *Invention*, I ſhould not care who took it upon himſelf, were I not apprehenſive that ſome ignorant Impoſtor, pretending himſelf the Inventor, might by that means impoſe upon the World in vending a falſe uſeleſs Engine for a true one; his conceited Workmen will be ſtill improving one Part or other of it, till it will perform nothing, after having perform'd well for almoſt 40 Years. And then the Invention being loſt, who will have Recourſe to my *Cutts* for reſtoring it, if I am not known to be the Inventor?

But I own I took the firſt Hints of my *Horſe-hoing* Culture from the plowed *Vineyards* near *Frontignan* and *Setts* in *Languedoc*; and after my Return to *England*, having Land come to my Hands, I improved thoſe Hints, by obſerving that the ſame ſort of Vineyard Tillage beſtowed on *Potatoes* and *Turneps* had the ſame Effect on them as it had on theſe Vines. And then the mentioned Row of Barley adjoining to the horſe-ho'd Turneps confirmed me in the *Principles*, which by arguing from Effects to their Cauſes, I had formed to myſelf; and my Practice ever ſince hath been a further Confirmation to me of the Truth of the ſame Principles.

Thus I muſt acknowledge to owe my Principles and Practice originally to my *Travels*, as I owe my Drill to my *Organ*.

The Third Part *is of the* Cautions *as follows:*

FOR my Part, if I knew any ſubſtantial Objection againſt this *Husbandry* it ſelf, I would not conceal it; but I declare, I know of none ſuch: Yet I know, there are many Objections againſt its being practiſed by thoſe who do not underſtand it, therefore I have never adviſed them to attempt it; but I have diſſuaded them as much as I could againſt drilling great Quantities of Wheat, before their own Practice, in ſmall Pieces, have made them perfect in this Method, by having the Principles which are neceſſary to direct them in it; for as Wheat is generally the moſt profitable Crop, ſo it requires the greateſt Circumſpection in the Management

FOR ſome other Crops, ſuch Directions might be given, that would require no more but Faith to execute them; but ſo many various Circumſtances uſually occur in the long Time that Wheat ought to live, that, I think, one can give no bare Directions in them all, before they happen, but what may endanger the deceiving of the Perſon they are intended to ſerve, unleſs the Principles themſelves accompany thoſe Directions.

SOME perhaps may ſuppoſe theſe Principles to be very numerous and prolix, becauſe they cannot be written ſo eaſily as Directions which reſult from them; though, in Truth, they are not ſo, for a few Lines would contain 'em all, if they had received the Approbation of proper Judges: In the mean Time, they are either ſo New or Paradoxical that I cannot without great Reluctancy write any of them ſeparately from the Arguments I bring to ſupport them; and no Man can judge ſo impartially in his own Cauſe, or of his own Arguments, as another, who is unconcerned, may. However, when they are publiſhed, every Farmer that approves 'em makes 'em his own; and then, whether he uſes or abuſes them, he cannot, I hope, juſtly blame me for his Conduct.

WHAT I moſt apprehend, is, the Raſhneſs of thoſe who ſhall enter upon the Practice of drilling Wheat, before they are ſufficiently informed concerning it; for they cannot avoid being liable to many Errors.

I would gladly ſave my Brother *Drillers* the Expence of weeding their Rows of Wheat before the Land has been cleanſed by Fallow or otherwiſe; but this cannot be done whilſt any ſpurious Seeds remain in it; unleſs Weeds had ſuch an Antipathy to the *Drill*, as the Ancients fancy'd their *Herba Medica* had to *Iron*, ſo that they might refuſe to grow, becauſe the *Drill* had paſſed over them. But 'tis ſo far otherwiſe, that Weeds will not only grow in the Rows, but alſo, if not taken out, receive as much Vigour from the Houghing, as the Corn will.

HAVING accidentally heard that *Drills* have been made and ſent a great way to Stangers who are going into this Practice, without any Experience or

or Knowledge of it; I could think of no better Way at present, to serve them and others who may do the same, than by giving them these Cautions; and assuring them, that in my Opinion, if by any whatever Mismanagement they fail of Success, the Fault will be imputed to the Husbandry itself; though if such Mismanagement (contrary to them) should have succeeded, it must have been an Argument against the Truth of the Principles whereon the *Husbandry* is founded: And that it may not be thus unjustly disparaged, nor the Well-wishers to it injured by their own Rashness, is what has induced me to publish these Papers, and my own Imperfections, I fear, too precipitately; on which Account I hope the Reader will pardon the Oversights I may have made, and also some which may seem such, until further explained.

I need not say Writing is none of my Business; but I hope the Farmer will not regard the Roughness of the Stile; because he knows a *Plough* will go never the better for being polished, though much the cheaper, for not being besmeared with Dung: Yet I must confess, that I have much less Aversion to Dung in the Field, than I have to the Expence of Buying and Carrying it thither: and I do not doubt but many Farmers will hate that as much as I do, when they are convinced by their own Experience, they can go on very well without it.

Here I should be wanting in my Duty to the *Horse-Hoing Husbandry*, and to those who might successfully practice it, if I did not take Notice of the Wrong done to both, by some who in Opposition to these *Cautions*, either of their own Heads, or by the Instigation of ignorant Pretenders, (who had no further Aim than to get Money by imposing on them) bought Instruments of those Pretenders and went into Practice, in which they were so hasty, as to give *Judgment* before my *Essay* was published, wherein are all my Directions: And the *Judgment* they gave, was not against their own Rashness, as in Justice it ought only; but against my *Scheme*, which they could not perform, unless they had stay'd till it was published; for my *Chapter* of Wheat had never been seen by any Mortal till just as it went to the Press, which was but a little before they pronounced their *Judgment*, *viz. That they had made Trial of it, and it did not Answer, and they believed it never would Answer.* The *Error* was in the Word *it*; which can be justly apply'd to no other Practice but their own Phantasies, yet they expressed themselves in such a Manner, that the *It* was understood by the Hearers as if it had been my *Scheme*, the Principles whereof they must be Strangers to, unless they had been Conjurers. What *their* Practice was, I know no body that knows, nor perhaps did they themselves know much more of the Performance of it, than what their Bailiffs (whose Word in these Matters is scarce ever to be rely'd on) told them; I only know it negatively, that it could not be mine.

Their rash Practice, and *Judgment* more rash and *Iniqua*, joined with the common Prejudice, which Truths that seem *New* generally meet with, must have been a Disparagement to this Husbandry.

Besides, the Word *Answer* is of such a large Extent, that though they should have had Success in their Project, it might not have answered their Expectations: they might not only have expected that Weeds should not presume to grow on the Land over which the Drill had passed, but also that it should transmute the Clods to *Gold* without *Study* or *Trouble*; that is the only *Scheme* would please them.

They seem to have entered on their Project as a Trick to get Money; and if they have made it a Trick to *lose* Money, what could I have done more to caution them against the Rashness of their Judgment, and the Loss of their Money? And so grateful were they for those Cautions, that if the Pretenders could have directed them in my Scheme, they would have forestalled my *Essay*; for what occasion would there have been to publish it, if those Pretenders had been Masters of it? But since they have prejudged my Scheme before they knew what it was, I hope they will not disparage it further now it is publish'd, as their Conduct is likely to do, if they meddle with it: 'Tis better that they leave their Agriculture to be managed at the Direction of their Bailiffs, who generally know how to deal with such Masters.

A Gentleman of Discretion, will, before he gives *Judgment*, or enters upon a large Practice, make the *Index* and Trials I have herein recommended; and if among my Arguments he finds one Demonstration, as I believe he will, for Proof of each fundamental Principle whereon the Scheme is founded, he may be sure it cannot fail of Success, but by some Misapplication, or Defect in the Execution, which he will take care to have rectify'd in every (necessary) Particular; and then he will see the Scheme *duely performed*. How long a Time may be required for him to accomplish *this*, and to become an expert Practiser, will depend upon his Conduct and the Docibility of his Servants.

A Gentleman who consults with his Bailiff about entering upon a new Scheme of Husbandry, is likely to have the same Encouragement as a *Papist* having a Mind to turn *Protestant* would have, by asking the Opinion of his Confessor.

Whoever they are who go into this Practice, without the forementioned Precautions, they ought not to wonder that they cannot perform it *properly*; since this is a *new Scheme*, the Directions for which are given but from ten or eleven Years Practice (in Wheat) and writ in a Language whereof the Writer has in a Manner lost the *Idiom*, when the *old Scheme* has been described, with the greatest Elegance of both Dead and Living Languages, and practised above three thousand Years, and there are very many Practisers that do not perform it *properly yet*; as is agreed, I believe, by most Writers of *Agriculture*.

But a new *Scheme* founded upon true Principles, though at first it may seem difficult to perform, will become *easy*, when the Hands that are to perform it, are reconciled to it.

If I had ever advised others to practise this *Scheme*, I could not have been justly accused of Insincerity in recommending to them what I did not practise my self; I have not had an Acre of *sown* Wheat these nine or ten last Years, and have at this Time a hundred Acres of *drilled* Wheat; all upon Wheat-Stuble and black Oat-Stuble, except nineteen Acres; and upon the same Farm where the Tenant used to sow twenty five of Wheat and rarely could compass to sow thirty; and Part of that was generally spoiled by *Poppies*, and the Rest not very good.

My 100 Acres are all of *white Cone Wheat* drilled in double Rows, the Partitions, some a Foot, some ten Inches wide. I have not seen any of it, being confined within Doors by many Diseases, several of which are adjudged to be the most cruel of any incident to a human Body. Therefore having no *Overseer* in whom I can confide, I am not certain how my Crop is or may be managed; but 'tis certain if the Principles are not followed 'twill not be the *Scheme*; but I hope this will not be so far from it, as *that* whereon the *above-mentioned* fallacious equivocal Judgment was given, and which has been much more injurious to the true *Scheme* than the *Equivocal* Society could ever have been; because these are evidently infamous Writers, and of no Credit, hired on purpose to cry it down; but those *Male-Practisers*, or at least some of them, are said, and (which I am sorry to believe) known to be *Gentlemen*: They have indeed by their bare Words (though as rash and inconsiderate as their Practice) hindered the Truths that support the vegetable Principles from being brought into a *Method*, whereby *Agriculture* might have been treated on more properly as a *Science*; for every true Demonstration is *self-evident*: I am far from saying *all* my Arguments are such, or *any* of them, if they had not had the Approbation of proper Judges: and now 'tis upon their Judgment more than my own that I depend upon the Validity of most of them; and I do not in the least doubt, but that the unexpensive Trials I have recommended, being properly made and repeated, will so fully confirm those Truths, that no Prejudice whatever shall afterwards be strong enough to prevail against them.

Why our Moderns (to say no more of the Ancients) have treated of the Subject very *Superficially*, a Reason may be given, *viz.* Mr. *Evelyn* wrote no Treatise of Agriculture, Mr. *Laurence* was a *Divine*, Mr. *Bradley* an *Academick*, Dr. *Woodward* a *Physician*, Mr. *Houghton* an *Apothecary*; these for want of Practice could not have the true *Theory*: And the Writers who were acquainted with the common Practice, as Mr. *Mortimer*, *&c.* (whether for want of Leisure, or not being qualified, I do not know) have said very little of any *Theory*, except such as the Author *quoted* by *Equivocus* writes, when he recommends the Dunging of Land with *Malt*. And if *regular Planting* (contrary to *Random*) be the true Practice, yet it can't be practised in great Quantities without proper Instruments to lessen the human Labour of it; as one Drill will regularly plant in very near Rows, more Land in a Day, than fifty Men can *set*, at the same Distances and Exactness: And without the Plow very little of the Fields can be *tilled*, so without the Drill, as little of them can be *regularly planted*. Therefore a Person must be well acquainted with the true *Practice*, *Theory*, and proper *Instruments*, before he can treat of Agriculture as a *Science*. But whether he may be the better qualified for that Purpose, by being *unacquainted* with Ancient and Modern *Treatises de Re Rustica*, the Reader may judge.

True Principles may be *useful* to every good *Scheme* of Husbandry, as they are absolutely *necessary* to this of *Horse-hoing*: But I think no other *new Scheme* has been so much as proposed of late, except that of Mr. *Laurence* for introducing *Assa Fœtida* into our Fields in the room of *Clover* and *St. Foin*; on what Principles that Scheme is founded, I am ignorant; yet perhaps it may be as acceptable to *some* as one founded upon the most approved and truest Principles, be it ever so practical, unless it would immediately enrich them, without the Study and Trouble that are as first necessary for their Servants to perform it properly: But yet 'tis probable there may be others of a different Way of Thinking from these, enough to make the *Horse-hoing* common in Time to come, if not presently; this being in many Particulars preferable to the other *Schemes* of *regular planting*, which at present in many Places get Ground in Reputation beyond the *Random Agriculture*.

But when the best *Scheme* once obtains, though it cannot last as long as the Truth which supports it; because that is (like all Truths) eternal; yet it may probably last as long as the Earth continues, to be cultivated by Tillage.

The last *Answer* I have to make, and with which I conclude, is to the Objection of *Singularity*, and of this I cannot be guilty, if what *Equivocus* affirms be true, *viz.* That *Platte* fell into the same Way of Thinking, and that his *Scheme* was *like* mine, which must then have been a Sort of Vineyard Culture; and if Mr. *Worlidge* or any other fell into the same Way of Thinking, when they aimed at contriving an Instrument for *Regular-planting*, which, *Equivocus* says, was like my *Drill*, I am not *singular*; for without doubt *Platte* must have taken his Hints from the Vineyards as I did; and if Mr. *Worlidge*, or any other had taken their Hints for a Drill from the *Organ* as I did, they would have saved me a good Deal of Trouble and Expence: and what is more, would have saved me from the Misfortune of being an Author. I am sure I always like my Thoughts best when they agree with other Men's, except when Reason (according to my Notion of it) compels me to *think* otherways; and whilst I apprehended them to be *singular*, I had no Design of putting them into Writing: but being by irresistible Importunities, and Solicitations press'd to publish my *own* Thoughts upon *Husbandry*, I have done it to the best of my poor Abilities, and faithfully.

By what I have said of the *rash Judgment*, I would not be understood to complain of any Person's Conduct who at any Time has made Trials of whatever Kind, for his own Curiosity without Regard to any Caution whatsoever: every Man having a Right to lay out his Money in what Manner, and by what Advice he pleases; and if thereby a better Scheme than mine should be found, I shall be glad of it.

The Judgment was given by a few, and of whom, according to my Information, only two or three were *Gentlemen*, their Names I neither know nor desire to know, but they were enough to raise a Report which did the *Wrong* I complained of, and I appeal to their Honour (which is inherent to all Gentlemen) against that Judgment when they are better informed; for I hope no Gentleman will persist in a Wrong when he knows it, especially in Matters that so nearly concern his Country as Ariculture doth. The Injury done to me, how great soever, is inconsiderable in Comparison of the *least* done to the Publick: and he that will do any Thing for its Service, as I have endeavoured to do, may expect to be a Sufferer. If I had refused to say any thing of the *Horse Hoing Scheme*, (which my Reason and Experience convince me is the best) and had published only my *Instruments* and *general Principles* of Agriculture, perhaps I might have suffered less: and whether I had not then gone further in these two Articles, than any Author that has writ on the Subject before me, is not proper for me to say, but for the Reader to judge.

F I N I S.

ERRATA *in the first Fifteen Chapters:*

PAGE 3. *L.* 12. *for* near, *read* nearly of. *p.* 6. *l.* 24. *r.* Mint F. *p.* 7. *l.* 2. *r.* both that the deep. *p.* 14. *l.* 26. *r.* not at all. *p.* 15. *l.* 45. *f.* or, *r.* of. *l.* 49. *f.* Greatness, *r.* greatest. *p.* 17. *l.* 38. *f.* natural, *r.* Artificial. *p.* 20. *l.* 31. *r.* for many Years. *p.* 29. *l.* 11. *f.* Author, *r.* Columella. *p.* 34. *l.* 17, 18. *f.* Thirty-six, *r.* Thirty. *p.* 42. *l.* 42. *dele* Vine. *p.* 51. *l.* 45. *r.* Rows. *p.* 57. *l.* 8. *f.* any, *r.* a much. *p.* 61. *l.* 15. *f.* than, *r.* that. *p.* 65. *l.* 34. *f.* as often, *r.* has often. *p.* 75. *l.* 11. *r. Moar-Loose. p.* 82. *l.* 29. *r.* preferable to. *p.* 84. *l.* 45. *r.* some part of. *p.* 88. *l.* 29. *after* Rick, *dele* it. *p.* 91. *l.* 55. *f.* which, *r.* this. *p.* 100. *l.* 13. *f.* Thirty, *r.* Thirty-three. *l.* 35. *f.* Bunches, *r.* Ounces. *p.* 108. *l.* 19. *f.* Mint markt (*b*), *r.* Mints G. and H. H. *p.* 117. *l.* 22. *f.* they, *r.* it:

In the Description of the Instruments.

Page. 143. *Line* 31. *r.* Poll-Wedge i. *p.* 144. *l.* 21. *f.* rise, *r.* raise. *p.* 145. *l.* 30. *r.* Link Y. *p.* 156. *l.* 30. *after* equal, *r.* and equidistant. *p.* 157. *l.* 33. *dele* A. *p.* 158. *l.* 21. *r.* G. is the Hole for another. *p.* 159. *l.* 10. *f.* in, *r.* for. *p.* 162, *l.* 12. *after* Angle, *r.* of each of these. *l.* 13. *f.* 7 Degr. and 30 Minutes, *r.* Six Degrees. *p.* 167. *l.* 11. *after* Inch, *r.* at its upper Part. *p.* 168. *l.* 2. *f.* Bottom of the Sheat, *r.* Tail of the Share. *l.* 37. *f.* Crevice, *r.* Rabbet. *p.* 171. *l.* 42. *f.* in, *r.* into. *p.* 177. *l.* 19. *dele* the Thickness of. *l.* 46. *r.* on each Side. *p.* 178. *l.* 20. *r.* a Box. *p.* 180. *l.* 50. *f.* for what, *r.* from what. *p.* 181. *l.* 5. *f.* Plank, *r.* Rank. *p.* 183. *l.* 23. *r.* Sixteen Inches. *l.* 32. *f.* Rows, *r.* Acres. *p.* 185. *l.* 11. *r.* into the Forks. *l. ult. f.* Inches, *r.* Sides. *p.* 188. *l.* 37. *r.* the Piece E. *p.* 194. *l.* 29. *f.* Bottom with its Mortise, *r.* Beam with its Mortises. *p.* 195. *l.* 19. *f.* placed, *r.* plowed. *l.* 41. *f.* B C. *r.* b c. *l.* 45. *f.* c d. *r.* e d. *p.* 198. *l.* 24. *r.* at or below a. *l.* 28. *f.* which is just level, *r.* which at b. is just even. *p.* 199. *l.* 28. *f.* Bottom, *r.* Beam. *p.* 200. *l.* 6. *f.* downwards, *r.* upwards.

In the SUPPLEMENT.

Page 112. *l.* 69. *r.* Vineyard Culture. *p.* 219. *l.* 56. *r.* assuesce. *p.* 221. *l.* 6. *f.* p. 11. *r.* p. ii. *p.* 228. *l.* 10. *r. contigeret eum. l.* 42. *r. feritatem. p.* 242. *l.* 25. *f.* other Way, *r.* otherways. *p.* 243. *l.* 49. *r. Antidrydenian.*

Lindsay 6. Jan. 1799. 1800. sp. 2.